McGraw-Hill HANDBOOKS

HANDBOOK OF PETROLEUM REFINING PROCESSES

THIRD EDITION

- Contains the latest technologies in the field of petroleum refining processes
- Contributors are drawn from the largest petroleum producers in the world
- Detailed description and review of process chemistry and thermodynamics, product and by-product specifications, wastes and emissions
- 50% new information over the Second Edition

ROBERT A. MEYERS

Source: HANDBOOK OF PETROLEUM REFINING PROCESSES

P · A · R · T · 1

ALKYLATION AND POLYMERIZATION

Downloaded from Digital Engineering Library @ McGraw-Hill (www.digitalengineeringlibrary.com)
Copyright © 2004 The McGraw-Hill Companies. All rights reserved.
Any use is subject to the Terms of Use as given at the website.

Downloaded from Digital Engineering Library @ McGraw-Hill (www.digitalengineeringlibrary.com)
Copyright © 2004 The McGraw-Hill Companies. All rights reserved.
Any use is subject to the Terms of Use as given at the website.

Source: HANDBOOK OF PETROLEUM REFINING PROCESSES

CHAPTER 1.1
NExOCTANE™ TECHNOLOGY FOR ISOOCTANE PRODUCTION

Ronald Birkhoff
Kellogg Brown & Root, Inc. (KBR)

Matti Nurminen
Fortum Oil and Gas Oy

INTRODUCTION

Environmental issues are threatening the future use of MTBE (methyl-tert-butyl ether) in gasoline in the United States. Since the late 1990s, concerns have arisen over ground and drinking water contamination with MTBE due to leaking of gasoline from underground storage tanks and the exhaust from two-cycle engines. In California a number of cases of drinking water pollution with MTBE have occurred. As a result, the elimination of MTBE in gasoline in California was mandated, and legislation is now set to go in effect by the end of 2003. The U.S. Senate has similar law under preparation, which would eliminate MTBE in the 2006 to 2010 time frame.

With an MTBE phase-out imminent, U.S. refiners are faced with the challenge of replacing the lost volume and octane value of MTBE in the gasoline pool. In addition, utilization of idled MTBE facilities and the isobutylene feedstock result in pressing problems of unrecovered and/or underutilized capital for the MTBE producers. Isooctane has been identified as a cost-effective alternative to MTBE. It utilizes the same isobutylene feeds used in MTBE production and offers excellent blending value. Furthermore, isooctane production can be achieved in a low-cost revamp of an existing MTBE plant. However, since isooctane is not an oxygenate, it does not replace MTBE to meet the oxygen requirement currently in effect for reformulated gasoline.

The NExOCTANE technology was developed for the production of isooctane. In the process, isobutylene is dimerized to produce isooctene, which can subsequently be hydrogenated to produce isooctane. Both products are excellent gasoline blend stocks with significantly higher product value than alkylate or polymerization gasoline.

Downloaded from Digital Engineering Library @ McGraw-Hill (www.digitalengineeringlibrary.com)
Copyright © 2004 The McGraw-Hill Companies. All rights reserved.
Any use is subject to the Terms of Use as given at the website.

NExOCTANE™ TECHNOLOGY FOR ISOOCTANE PRODUCTION

HISTORY OF MTBE

During the 1990s, MTBE was the oxygenate of choice for refiners to meet increasingly stringent gasoline specifications. In the United States and in a limited number of Asian countries, the use of oxygenates in gasoline was mandated to promote cleaner-burning fuels. In addition, lead phase-down programs in other parts of the world have resulted in an increased demand for high-octane blend stock. All this resulted in a strong demand for high-octane fuel ethers, and significant MTBE production capacity has been installed since 1990.

Today, the United States is the largest consumer of MTBE. The consumption increased dramatically with the amendment of the Clean Air Act in 1990 which incorporated the 2 percent oxygen mandate. The MTBE production capacity more than doubled in the 5-year period from 1991 to 1995. By 1998, the MTBE demand growth had leveled off, and it has since tracked the demand growth for reformulated gasoline (RFG). The United States consumes about 300,000 BPD of MTBE, of which over 100,000 BPD is consumed in California. The U.S. MTBE consumption is about 60 percent of the total world demand.

MTBE is produced from isobutylene and methanol. Three sources of isobutylene are used for MTBE production:

- On-purpose butane isomerization and dehydrogenation
- Fluid catalytic cracker (FCC) derived mixed C_4 fraction
- Steam cracker derived C_4 fraction

The majority of the MTBE production is based on FCC and butane dehydrogenation derived feeds.

NExOCTANE BACKGROUND

Fortum Oil and Gas Oy, through its subsidiary Neste Engineering, has developed the NExOCTANE technology for the production of isooctane. NExOCTANE is an extension of Fortum's experience in the development and licensing of etherification technologies. Kellogg Brown & Root, Inc. (KBR) is the exclusive licenser of NExOCTANE. The technology licensing and process design services are offered through a partnership between Fortum and KBR.

The technology development program was initialized in 1997 in Fortum's Research and Development Center in Porvoo, Finland, for the purpose of producing high-purity isooctene, for use as a chemical intermediate. With the emergence of the MTBE pollution issue and the pending MTBE phase-out, the focus in the development was shifted in 1998 to the conversion of existing MTBE units to produce isooctene and isooctane for gasoline blending.

The technology development has been based on an extensive experimental research program in order to build a fundamental understanding of the reaction kinetics and key product separation steps in the process. This research has resulted in an advanced kinetic modeling capability, which is used in the design of the process for licensees. The process has undergone extensive pilot testing, utilizing a full range of commercial feeds. The first commercial NExOCTANE unit started operation in the third quarter of 2002.

PROCESS CHEMISTRY

The primary reaction in the NExOCTANE process is the dimerization of isobutylene over acidic ion-exchange resin catalyst. This dimerization reaction forms two isomers of

Downloaded from Digital Engineering Library @ McGraw-Hill (www.digitalengineeringlibrary.com)
Copyright © 2004 The McGraw-Hill Companies. All rights reserved.
Any use is subject to the Terms of Use as given at the website.

NExOCTANE™ TECHNOLOGY FOR ISOOCTANE PRODUCTION

trimethylpentene (TMP), or isooctene, namely, 2,4,4-TMP-1 and 2,4,4-TMP-2, according to the following reactions:

TMP further reacts with isobutylene to form trimers, tetramers, etc. Formation of these oligomers is inhibited by oxygen-containing polar components in the reaction mixture. In the

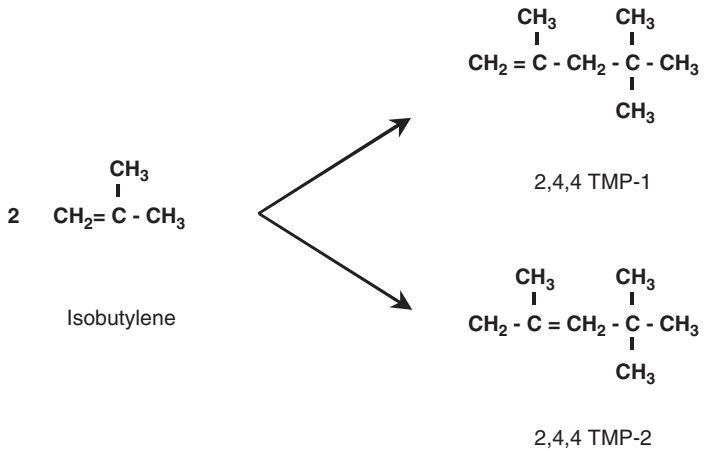

NExOCTANE process, water and alcohol are used as inhibitors. These polar components block acidic sites on the ion-exchange resin, thereby controlling the catalyst activity and increasing the selectivity to the formation of dimers. The process conditions in the dimerization reactions are optimized to maximize the yield of high-quality isooctene product.

A small quantity of C_7 and C_9 components plus other C_8 isomers will be formed when other olefin components such as propylene, *n*-butenes, and isoamylene are present in the reaction mixture. In the NExOCTANE process, these reactions are much slower than the isobutylene dimerization reaction, and therefore only a small fraction of these components is converted.

Isooctene can be hydrogenated to produce isooctane, according to the following reaction:

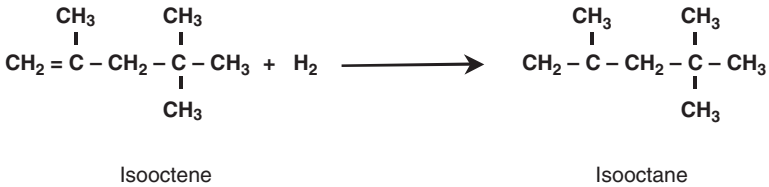

NExOCTANE PROCESS DESCRIPTION

The NExOCTANE process consists of two independent sections. Isooctene is produced by dimerization of isobutylene in the dimerization section, and subsequently, the isooctene can be hydrogenated to produce isooctane in the hydrogenation section. Dimerization and hydrogenation are independently operating sections. Figure 1.1.1 shows a simplified flow diagram for the process.

The isobutylene dimerization takes place in the liquid phase in adiabatic reactors over fixed beds of acidic ion-exchange resin catalyst. The product quality, specifically the distri-

Downloaded from Digital Engineering Library @ McGraw-Hill (www.digitalengineeringlibrary.com)
Copyright © 2004 The McGraw-Hill Companies. All rights reserved.
Any use is subject to the Terms of Use as given at the website.

NExOCTANE™ TECHNOLOGY FOR ISOOCTANE PRODUCTION

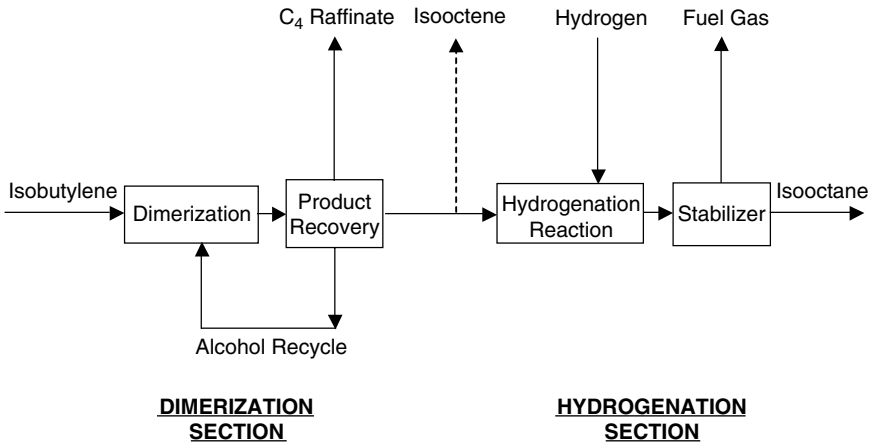

FIGURE 1.1.1 NExOCTANE process.

bution of dimers and oligomers, is controlled by recirculating alcohol from the product recovery section to the reactors. Alcohol is formed in the dimerization reactors through the reaction of a small amount of water with olefin present in the feed. The alcohol content in the reactor feed is typically kept at a sufficient level so that the isooctene product contains less than 10 percent oligomers. The dimerization product recovery step separates the isooctene product from the unreacted fraction of the feed (C_4 raffinate) and also produces a concentrated alcohol stream for recycle to the dimerization reaction. The C_4 raffinate is free of oxygenates and suitable for further processing in an alkylation unit or a dehydrogenation plant.

Isooctene produced in the dimerization section is further processed in a hydrogenation unit to produce the saturated isooctane product. In addition to saturating the olefins, this unit can be designed to reduce sulfur content in the product. The hydrogenation section consists of trickle-bed hydrogenation reactor(s) and a product stabilizer. The purpose of the stabilizer is to remove unreacted hydrogen and lighter components in order to yield a product with a specified vapor pressure.

The integration of the NExOCTANE process into a refinery or butane dehydrogenation complex is similar to that of the MTBE process. NExOCTANE selectively reacts isobutylene and produces a C_4 raffinate which is suitable for direct processing in an alkylation or dehydrogenation unit. A typical refinery integration is shown in Fig. 1.1.2, and an integration into a dehydrogenation complex is shown in Fig. 1.1.3.

NExOCTANE PRODUCT PROPERTIES

The NExOCTANE process offers excellent selectivity and yield of isooctane (2,2,4-trimethylpentane). Both the isooctene and isooctane are excellent gasoline blending components. Isooctene offers substantially better octane blending value than isooctane. However, the olefin content of the resulting gasoline pool may be prohibitive for some refiners.

The characteristics of the products are dependent on the type of feedstock used. Table 1.1.1 presents the product properties of isooctene and isooctane for products produced from FCC derived feeds as well as isooctane from a butane dehydrogenation feed.

The measured blending octane numbers for isooctene and isooctane as produced from FCC derived feedstock are presented in Table 1.1.2. The base gasoline used in this analy-

Downloaded from Digital Engineering Library @ McGraw-Hill (www.digitalengineeringlibrary.com)
Copyright © 2004 The McGraw-Hill Companies. All rights reserved.
Any use is subject to the Terms of Use as given at the website.

NExOCTANE™ TECHNOLOGY FOR ISOOCTANE PRODUCTION

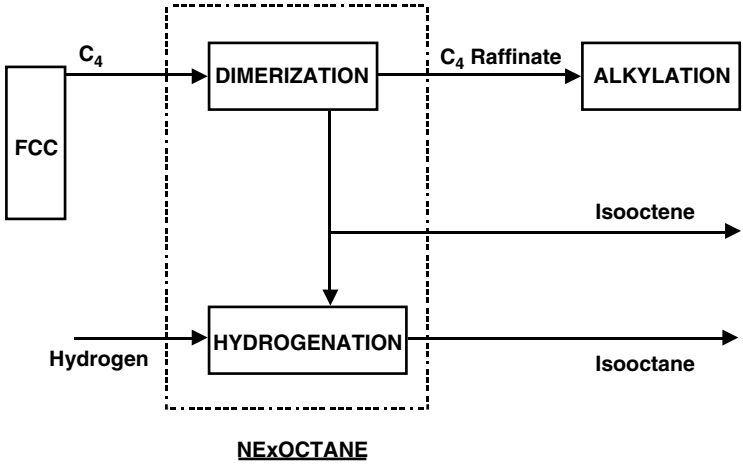

FIGURE 1.1.2 Typical integration in refinery.

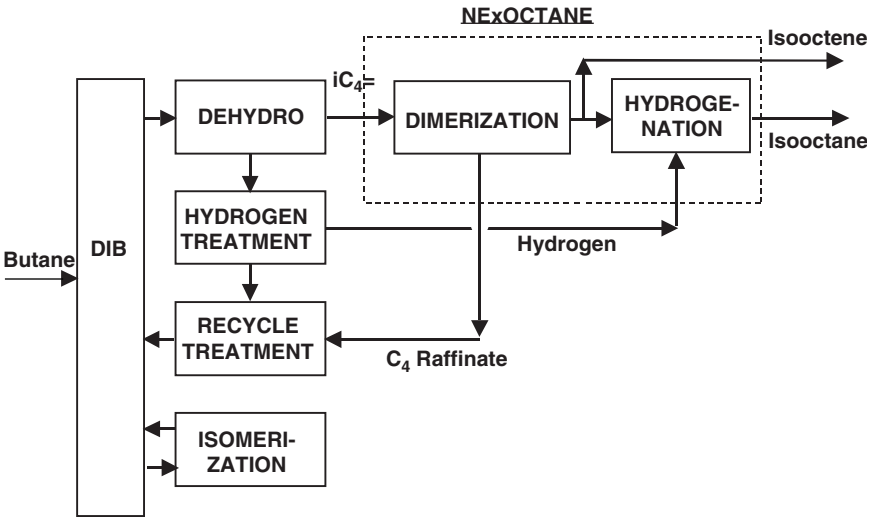

FIGURE 1.1.3 Integration in a typical dehydrogenation complex.

sis is similar to nonoxygenated CARB base gasoline. Table 1.1.2 demonstrates the significant blending value for the unsaturated isooctene product, compared to isooctane.

PRODUCT YIELD

An overall material balance for the process based on FCC and butane dehydrogenation derived isobutylene feedstocks is shown in Table 1.1.3. In the dehydrogenation case, an isobutylene feed content of 50 wt % has been assumed, with the remainder of the feed

Downloaded from Digital Engineering Library @ McGraw-Hill (www.digitalengineeringlibrary.com)
Copyright © 2004 The McGraw-Hill Companies. All rights reserved.
Any use is subject to the Terms of Use as given at the website.

NExOCTANE™ TECHNOLOGY FOR ISOOCTANE PRODUCTION

TABLE 1.1.1 NExOCTANE Product Properties

	FCC C_4		Butane dehydrogenation
	Isooctane	Isooctene	Isooctane
Specific gravity	0.704	0.729	0.701
RONC	99.1	101.1	100.5
MONC	96.3	85.7	98.3
$(R + M) / 2$	97.7	93.4	99.4
RVP, lb/in^2 absolute	1.8	1.8	1.8

TABLE 1.1.2 Blending Octane Number in CARB Base Gasoline (FCC Derived)

	Isooctene			Isooctane		
Blending volume, %	BRON	BMON	$(R + M) / 2$	BRON	BMON	$(R + M) / 2$
10	124.0	99.1	111.0	99.1	96.1	97.6
20	122.0	95.1	109.0	100.1	95.1	97.6
100	101.1	85.7	93.4	99.1	96.3	97.7

TABLE 1.1.3 Sample Material Balance for NExOCTANE Unit

Material balance	FCC C_4 feed, lb/h (BPD)	Butane dehydrogenation, lb/h (BPD)
Dimerization section:		
Hydrocarbon feed	137,523 (16,000)	340,000 (39,315)
Isobutylene contained	30,614 (3,500)	170,000 (19,653)
Isooctene product	30,714 (2,885)	172,890 (16,375)
C_4 raffinate	107,183 (12,470)	168,710 (19,510)
Hydrogenation section:		
Isooctene feed	30,714 (2,885)	172,890 (16,375)
Hydrogen feed	581	3752
Isooctane product	30,569 (2,973)	175,550 (17,146)
Fuel gas product	726	1092

mostly consisting of isobutane. For the FCC feed an isobutylene content of 22 wt % has been used. In each case the C_4 raffinate quality is suitable for either direct processing in a refinery alkylation unit or recycle to isomerization or dehydrogenation step in the dehydrogenation complex. Note that the isooctene and isooctane product rates are dependent on the content of isobutylene in the feedstock.

UTILITY REQUIREMENTS

The utilities required for the NExOCTANE process are summarized in Table 1.1.4.

Downloaded from Digital Engineering Library @ McGraw-Hill (www.digitalengineeringlibrary.com)
Copyright © 2004 The McGraw-Hill Companies. All rights reserved.
Any use is subject to the Terms of Use as given at the website.

NExOCTANE™ TECHNOLOGY FOR ISOOCTANE PRODUCTION

TABLE 1.1.4 Typical Utility Requirements

Utility requirements	FCC C_4 per BPD of product	Butane dehydrogenation per BPD of product
Dimerization section:		
Steam, 1000 lb/h	13	6.4
Cooling water, gal/min	0.2	0.6
Power, kWh	0.2	0.03
Hydrogenation section:		
Steam, 1000 lb/h	1.5	0.6
Cooling water, gal/min	0.03	0.03
Power, kWh	0.03	0.1

NExOCTANE TECHNOLOGY ADVANTAGES

Long-Life Dimerization Catalyst

The NExOCTANE process utilizes a proprietary acidic ion-exchange resin catalyst. This catalyst is exclusively offered for the NExOCTANE technology. Based on Fortum's extensive catalyst trials, the expected catalyst life of this exclusive dimerization catalyst is at least double that of standard resin catalysts.

Low-Cost Plant Design

In the dimerization process, the reaction takes place in nonproprietary fixed-bed reactors. The existing MTBE reactors can typically be reused without modifications. Product recovery is achieved by utilizing standard fractionation equipment. The configuration of the recovery section is optimized to make maximum use of the existing MTBE product recovery equipment.

High Product Quality

The combination of a selective ion-exchange resin catalyst and optimized conditions in the dimerization reaction results in the highest product quality. Specifically, octane rating and specific gravity are better than those in product produced with alternative catalyst systems or competing technologies.

State-of-the-Art Hydrogenation Technology

The NExOCTANE process provides a very cost-effective hydrogenation technology. The trickle-bed reactor design requires low capital investment, due to a compact design plus once-through flow of hydrogen, which avoids the need for a recirculation compressor. Commercially available hydrogenation catalysts are used.

Commercial Experience

The NExOCTANE technology is in commercial operation in North America in the world's largest isooctane production facility based on butane dehydrogenation. The project includes a grassroots isooctene hydrogenation unit.

Downloaded from Digital Engineering Library @ McGraw-Hill (www.digitalengineeringlibrary.com)
Copyright © 2004 The McGraw-Hill Companies. All rights reserved.
Any use is subject to the Terms of Use as given at the website.

Downloaded from Digital Engineering Library @ McGraw-Hill (www.digitalengineeringlibrary.com)
Copyright © 2004 The McGraw-Hill Companies. All rights reserved.
Any use is subject to the Terms of Use as given at the website.

Source: HANDBOOK OF PETROLEUM REFINING PROCESSES

CHAPTER 1.2
STRATCO EFFLUENT REFRIGERATED H_2SO_4 ALKYLATION PROCESS

David C. Graves
STRATCO
Leawood, Kansas

INTRODUCTION

Alkylation, first commercialized in 1938, experienced tremendous growth during the 1940s as a result of the demand for high-octane aviation fuel during World War II. During the mid-1950s, refiners' interest in alkylation shifted from the production of aviation fuel to the use of alkylate as a blending component in automotive motor fuel. Capacity remained relatively flat during the 1950s and 1960s due to the comparative cost of other blending components. The U.S. Environmental Protection Agency's lead phase-down program in the 1970s and 1980s further increased the demand for alkylate as a blending component for motor fuel. As additional environmental regulations are imposed on the worldwide refining community, the importance of alkylate as a blending component for motor fuel is once again being emphasized. Alkylation unit designs (grassroots and revamps) are no longer driven only by volume, but rather by a combination of volume, octane, and clean air specifications. Lower olefin, aromatic, sulfur, Reid vapor pressure (RVP), and drivability index (DI) specifications for finished gasoline blends have also become driving forces for increased alkylate demand in the United States and abroad. Additionally, the probable phase-out of MTBE in the United States will further increase the demand for alkylation capacity.

The alkylation reaction combines isobutane with light olefins in the presence of a strong acid catalyst. The resulting highly branched, paraffinic product is a low-vapor-pressure, high-octane blending component. Although alkylation can take place at high temperatures without catalyst, the only processes of commercial importance today operate at low to moderate temperatures using either sulfuric or hydrofluoric acid catalysts. Several different companies are currently pursuing research to commercialize a solid alkylation catalyst. The reactions occurring in the alkylation process are complex and produce an alkylate product that has a wide boiling range. By optimizing operating conditions, the

Downloaded from Digital Engineering Library @ McGraw-Hill (www.digitalengineeringlibrary.com)
Copyright © 2004 The McGraw-Hill Companies. All rights reserved.
Any use is subject to the Terms of Use as given at the website.

STRATCO EFFLUENT REFRIGERATED H2SO4 ALKYLATION PROCESS

majority of the product is within the desired gasoline boiling range with motor octane numbers (MONs) up to 95 and research octane numbers (RONs) up to 98.

PROCESS DESCRIPTION

A block flow diagram of the STRATCO effluent refrigerated H_2SO_4 alkylation project is shown in Fig. 1.2.1. Each section of the block flow diagram is described below:

Reaction section. Here the reacting hydrocarbons are brought into contact with sulfuric acid catalyst under controlled conditions.

Refrigeration section. Here the heat of reaction is removed, and light hydrocarbons are removed from the unit.

Effluent treating section. Here the free acid, alkyl sulfates, and dialkyl sulfates are removed from the net effluent stream to avoid downstream corrosion and fouling.

Fractionation section. Here isobutane is recovered for recycle to the reaction section, and remaining hydrocarbons are separated into the desired products.

Blowdown section. Here spent acid is degassed, wastewater pH is adjusted, and acid vent streams are neutralized before being sent off-site.

The blocks are described in greater detail below:

Reaction Section

In the reaction section, olefins and isobutane are alkylated in the presence of sulfuric acid catalyst. As shown in Fig. 1.2.2, the olefin feed is initially combined with the recycle isobutane. The olefin and recycle isobutane mixed stream is then cooled to approximately 60°F (15.6°C) by exchanging heat with the net effluent stream in the feed/effluent exchangers.

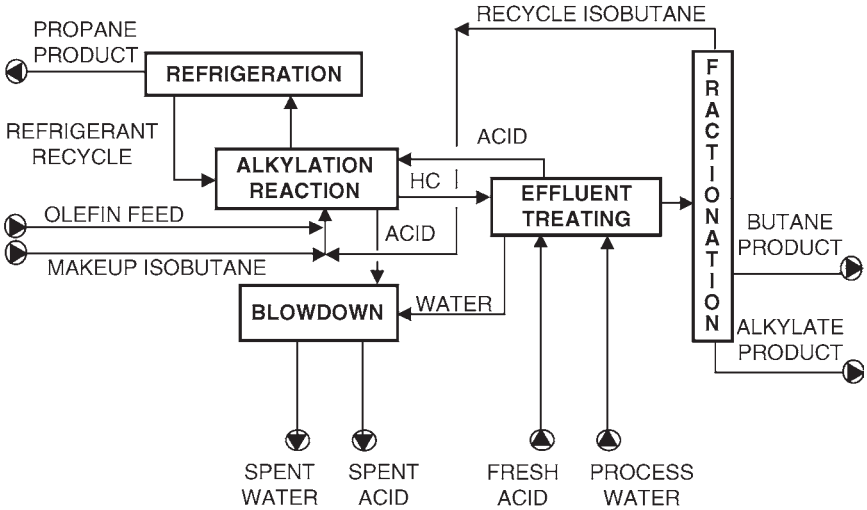

FIGURE 1.2.1 Block flow diagram of STRATCO Inc. effluent refrigerated alkylation process.

Downloaded from Digital Engineering Library @ McGraw-Hill (www.digitalengineeringlibrary.com)
Copyright © 2004 The McGraw-Hill Companies. All rights reserved.
Any use is subject to the Terms of Use as given at the website.

STRATCO EFFLUENT REFRIGERATED H2SO4 ALKYLATION PROCESS

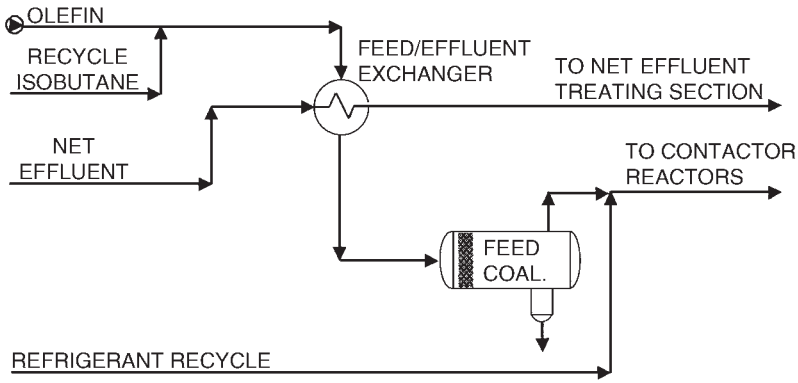

FIGURE 1.2.2 Feed mixing and cooling.

Since the solubility of water is reduced at lower temperatures, water is freed from the hydrocarbon to form a second liquid phase. The feed coalescer removes this free water to minimize dilution of the sulfuric acid catalyst.

The feed stream is then combined with the refrigerant recycle stream from the refrigeration section. The refrigerant recycle stream provides additional isobutane to the reaction zone. This combined stream is fed to the STRATCO Contactor reactors.

The use of separate Contactor reactors in the STRATCO process allows for the segregation of different olefin feeds to optimize alkylate properties and acid consumption. In these cases, the unit will have parallel trains of feed/effluent exchangers and feed coalescers.

At the "heart" of STRATCO's effluent refrigerated alkylation technology is the Contactor reactor (Fig. 1.2.3). The Contactor reactor is a horizontal pressure vessel containing an inner circulation tube, a tube bundle to remove the heat of reaction, and a mixing impeller. The hydrocarbon feed and sulfuric acid enter on the suction side of the impeller inside the circulation tube. As the feeds pass across the impeller, an emulsion of hydrocarbon and acid is formed. The emulsion in the Contactor reactor is continuously circulated at very high rates.

The superior mixing and high internal circulation of the Contactor reactor minimize the temperature difference between any two points in the reaction zone to within 1°F (0.6°C). This reduces the possibility of localized hot spots that lead to degraded alkylate product and increased chances for corrosion. The intense mixing in the Contactor reactor also provides uniform distribution of the hydrocarbons in the acid emulsion. This prevents localized areas of nonoptimum isobutane/olefin ratios and acid/olefin ratios, both of which promote olefin polymerization reactions.

Figure 1.2.4 shows the typical Contactor reactor and acid settler arrangement. A portion of the emulsion in the Contactor reactor, which is approximately 50 LV % acid and 50 LV % hydrocarbon, is withdrawn from the discharge side of the impeller and flows to the acid settler. The hydrocarbon phase (reactor effluent) is separated from the acid emulsion in the acid settlers. The acid, being the heavier of the two phases, settles to the lower portion of the vessel. It is returned to the suction side of the impeller in the form of an emulsion, which is richer in acid than the emulsion entering the settlers.

The STRATCO alkylation process utilizes an effluent refrigeration system to remove the heat of reaction and to control the reaction temperature. With effluent refrigeration, the hydrocarbons in contact with the sulfuric acid catalyst are maintained in the liquid phase. The hydrocarbon effluent flows from the top of the acid settler to the tube bundle in the

Downloaded from Digital Engineering Library @ McGraw-Hill (www.digitalengineeringlibrary.com)
Copyright © 2004 The McGraw-Hill Companies. All rights reserved.
Any use is subject to the Terms of Use as given at the website.

STRATCO EFFLUENT REFRIGERATED H2SO4 ALKYLATION PROCESS

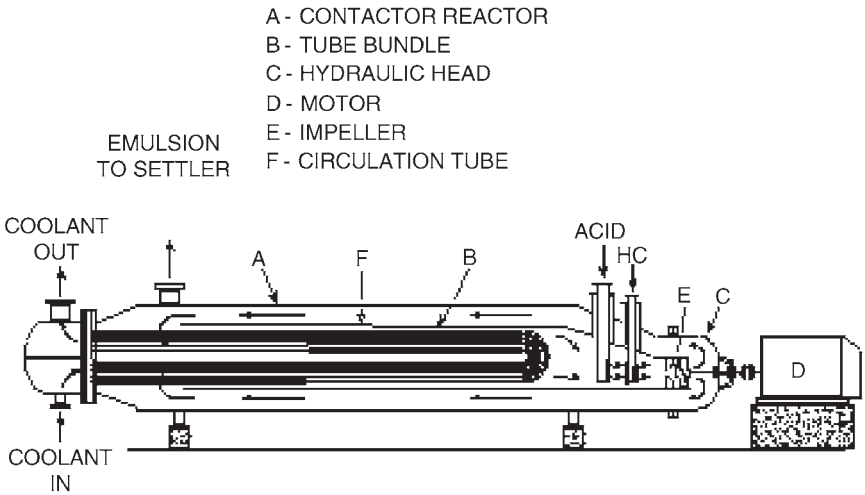

FIGURE 1.2.3 STRATCO Contactor reactor.

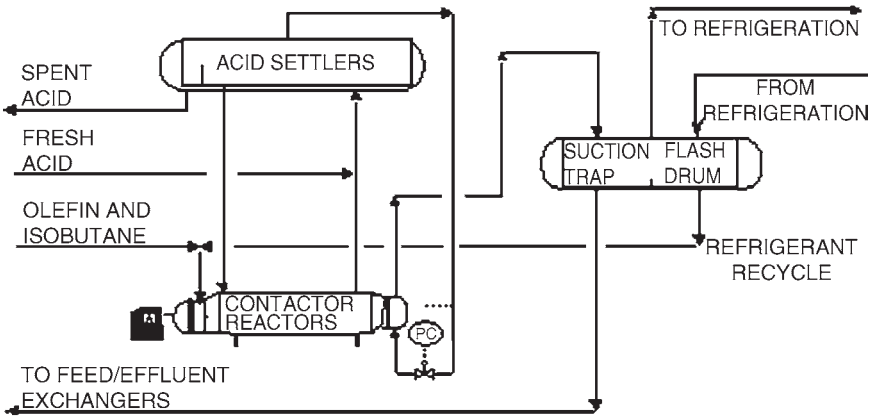

FIGURE 1.2.4 Contactor reactor/acid settler arrangement.

Contactor reactor. A control valve located in this line maintains a back pressure of about 60 lb/in^2 gage (4.2 kg/cm^2 gage) in the acid settler.

This pressure is adequate to prevent vaporization in the reaction system. In plants with multiple Contactor reactors, the acid settler pressures are operated about 5 lb/in^2 (0.4 kg/cm^2) apart to provide adequate pressure differential for series acid flow.

The pressure of the hydrocarbon stream from the top of the acid settler is reduced to about 5 lb/in^2 gage (0.4 kg/cm^2 gage) across the back pressure control valve. A portion of the effluent stream is flashed, reducing the temperature to about 35°F (1.7°C). Additional vaporization occurs in the Contactor reactor tube bundle as the net effluent stream removes the heat of reaction. The two-phase net effluent stream flows to the suction trap/flash drum where the vapor and liquid phases are separated.

Downloaded from Digital Engineering Library @ McGraw-Hill (www.digitalengineeringlibrary.com)
Copyright © 2004 The McGraw-Hill Companies. All rights reserved.
Any use is subject to the Terms of Use as given at the website.

STRATCO EFFLUENT REFRIGERATED H2SO4 ALKYLATION PROCESS

The suction trap/flash drum is a two-compartment vessel with a common vapor space. The net effluent pump transfers the liquid from the suction trap side (net effluent) to the effluent treating section via the feed/effluent exchangers. Refrigerant from the refrigeration section flows to the flash drum side of the suction trap/flash drum. The combined vapor stream is sent to the refrigeration section.

The sulfuric acid present in the reaction zone serves as a catalyst to the alkylation reaction. Theoretically, a catalyst promotes a chemical reaction without being changed as a result of that reaction. In reality, however, the acid is diluted as a result of the side reactions and feed contaminants. To maintain the desired spent acid strength, a small amount of fresh acid is continuously charged to the acid recycle line from the acid settler to the Contactor reactor, and a similar amount of spent acid is withdrawn from the acid settler.

In multiple-Contactor reactor plants, the reactors are usually operated in parallel on hydrocarbon and in series/parallel on acid, up to a maximum of four stages. Fresh acid and intermediate acid flow rates between the Contactor reactors control the spent acid strength.

The spent acid strength is generally monitored by titration, which is done in the laboratory. In response to our customer requests, STRATCO has developed an on-line acid analyzer that enables the operators to spend the sulfuric acid to lower strengths with much greater accuracy and confidence.

When alkylating segregated olefin feeds, the optimum acid settler configuration will depend on the olefins processed and the relative rates of each feed. Generally, STRATCO recommends processing the propylene at high acid strength, butylenes at intermediate strength, and amylenes at low strength. The optimum configuration for a particular unit may involve operating some reaction zones in parallel and then cascading to additional reaction zones in series. STRATCO considers several acid staging configurations for every design in order to provide the optimum configuration for the particular feed.

Refrigeration Section

Figure 1.2.5 is a diagram of the most common refrigeration configuration. The partially vaporized net effluent stream from the Contactor reactor flows to the suction trap/flash drum, where the vapor and liquid phases are separated. The vapor from the suction trap/flash drum is compressed by a motor or turbine-driven compressor and then condensed in a total condenser.

A portion of the refrigerant condensate is purged or sent to a depropanizer. The remaining refrigerant is flashed across a control valve and sent to the economizer. If a depropanizer is included in the design, the bottoms stream from the tower is also sent to the economizer. The economizer operates at a pressure between the condensing pressure and the compressor suction pressure. The economizer liquid is flashed and sent to the flash drum side of the suction trap/flash drum.

A lower-capital-cost alternative would be to eliminate the economizer at a cost of about 7 percent higher compressor energy. Another alternative is to incorporate a partial condenser to the economizer configuration and thus effectively separate the refrigerant from the light ends, allowing for propane enrichment of the depropanizer feed stream. As a result, both depropanizer capital and operating costs can be reduced. The partial condenser design is most cost-effective when feed streams to the alkylation unit are high (typically greater than 40 LV %) in propane/propylene content.

For all the refrigeration configurations, the purge from the refrigeration loop is treated to remove impurities prior to flowing to the depropanizer or leaving the unit. These impurities can cause corrosion in downstream equipment. The main impurity removed from the purge stream is sulfur dioxide (SO_2). SO_2 is produced from oxidation reactions in the reaction section and decomposition of sulfur-bearing contaminants in the unit feeds.

Downloaded from Digital Engineering Library @ McGraw-Hill (www.digitalengineeringlibrary.com)
Copyright © 2004 The McGraw-Hill Companies. All rights reserved.
Any use is subject to the Terms of Use as given at the website.

STRATCO EFFLUENT REFRIGERATED H2SO4 ALKYLATION PROCESS

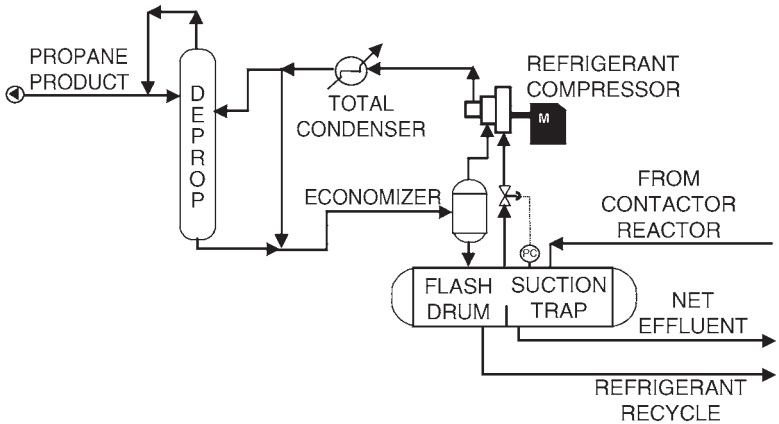

FIGURE 1.2.5 Refrigeration with economizer.

The purge is contacted with strong caustic (10 to 12 wt %) in an in-line static mixer and is sent to the caustic wash drum. The separated hydrocarbon stream from the caustic wash drum then mixes with process water and is sent to a coalescer (Fig. 1.2.6). The coalescer reduces the carryover caustic in the hydrocarbon stream that could cause stress corrosion cracking or caustic salt plugging and fouling in downstream equipment. The injection of process water upstream of the coalescer enhances the removal of caustic carryover in the coalescer.

Effluent Treating Section

The net effluent stream from the reaction section contains traces of free acid, alkyl sulfates, and dialkyl sulfates formed by the reaction of sulfuric acid with olefins. These alkyl sulfates are commonly referred to as *esters.* Alkyl sulfates are reaction intermediates found in all sulfuric acid alkylation units, regardless of the technology. If the alkyl sulfates are not removed, they can cause corrosion and fouling in downstream equipment.

STRATCO's net effluent treating section design has been modified over the years in an effort to provide more effective, lower-cost treatment of the net effluent stream. STRATCO's older designs included caustic and water washes in series. Until recently, STRATCO's standard design included an acid wash with an electrostatic precipitator followed by an alkaline water wash. Now STRATCO alkylation units are designed with an acid wash coalescer, alkaline water wash, and a water wash coalescer in series (Fig. 1.2.7) or with an acid wash coalescer followed by bauxite treating. Although all these treatment methods remove the trace amounts of free acid and reaction intermediates (alkyl sulfates) from the net effluent stream, the acid wash coalescer/alkaline water wash/water wash coalescer design and acid wash coalescer/bauxite treater design are the most efficient.

Fractionation Section

The fractionation section configuration of grassroots alkylation units, either effluent refrigerated or autorefrigerated, is determined by feed composition to the unit and product specifications. As mentioned previously, the alkylation reactions are enhanced by an excess

Downloaded from Digital Engineering Library @ McGraw-Hill (www.digitalengineeringlibrary.com)
Copyright © 2004 The McGraw-Hill Companies. All rights reserved.
Any use is subject to the Terms of Use as given at the website.

STRATCO EFFLUENT REFRIGERATED H2SO4 ALKYLATION PROCESS

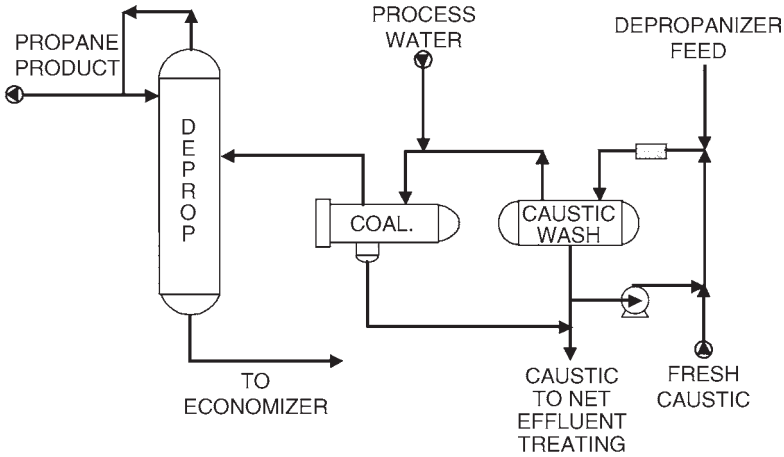

FIGURE 1.2.6 Depropanizer feed treating.

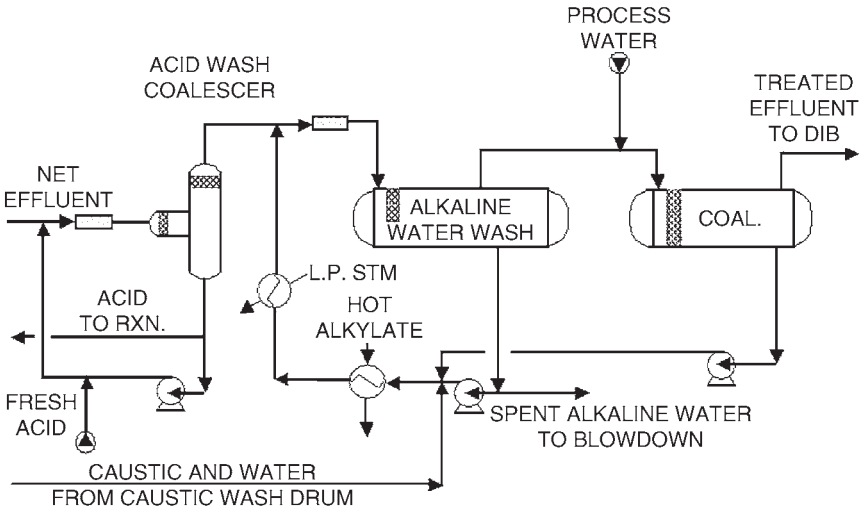

FIGURE 1.2.7 Effluent treating section.

amount of isobutane. A large recycle stream is required to produce the optimum I/O volumetric ratio of 7 : 1 to 10 : 1 in the feed to the Contactor reactors. Therefore, the fractionation section of the alkylation unit is not simply a product separation section; it also provides a recycle isobutane stream.

To meet overall gasoline pool RVP requirements, many of the recent alkylation designs require an alkylate RVP of 4 to 6 lb/in^2 (0.28 to 0.42 kg/cm^2). To reduce the RVP of the alkylate, a large portion of the *n*-butane and isopentane must be removed. Low C_5+ content of the *n*-butane product is difficult to meet with a vapor side draw on the DIB and

Downloaded from Digital Engineering Library @ McGraw-Hill (www.digitalengineeringlibrary.com)
Copyright © 2004 The McGraw-Hill Companies. All rights reserved.
Any use is subject to the Terms of Use as given at the website.

STRATCO EFFLUENT REFRIGERATED H2SO4 ALKYLATION PROCESS

requires the installation of a debutanizer tower (Fig. 1.2.8). Typically, a debutanizer is required when the specified C_5+ content of the *n*-butane product must be less than 2 LV %.

A simpler system consisting of a deisobutanizer (DIB) with a side draw may suffice if a high-purity *n*-butane product is not required. The simplest fractionation system applies to a unit processing a high-purity olefin stream, such as an isobutane/isobutylene stream from a dehydrogenation unit. For these cases, a single isostripper can be used to produce a recycle isobutane stream, a low-RVP alkylate product, and a small isopentane product. An isostripper requires no reflux and many fewer trays than a DIB.

Blowdown Section

The acidic blowdown vapors from potential pressure relief valve releases are routed to the acid blowdown drum to knock out any entrained liquid sulfuric acid. Additionally, spent acid from the last Contactor reactor/acid settler system(s) in series is sent to the acid blowdown drum. This allows any residual hydrocarbon in the spent acid to flash. The acid blowdown drum also provides surge capacity for spent acid. The acidic vapor effluent from the acid blowdown drum is sent to the blowdown vapor scrubber. The acidic vapors are countercurrently contacted with a circulating 12 wt % caustic solution in a six-tray scrubber (Fig. 1.2.9).

TECHNOLOGY IMPROVEMENTS

The following information is provided to highlight important design information about the STRATCO H_2SO_4 effluent refrigerated alkylation process.

STRATCO Contactor Reactor

The alkylation reaction requires that the olefin be contacted with the acid catalyst concurrently with a large excess of isobutane. If these conditions are not present, polymerization

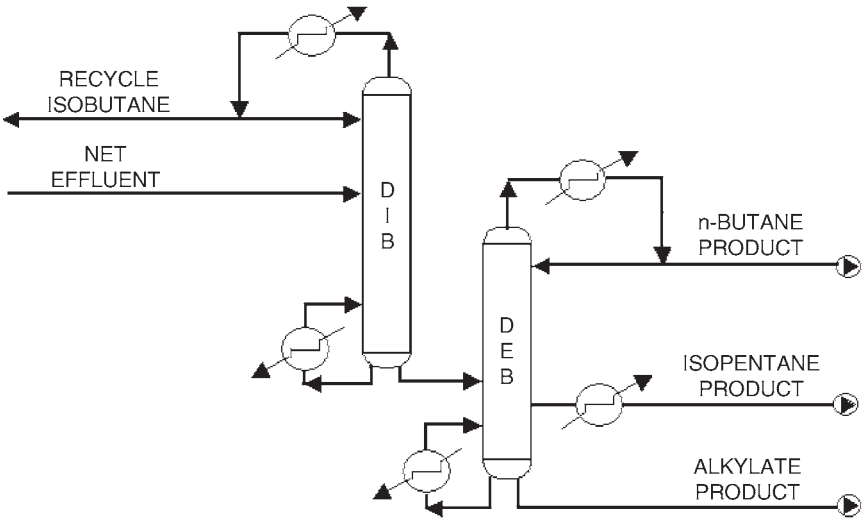

FIGURE 1.2.8 Fractionation system.

Downloaded from Digital Engineering Library @ McGraw-Hill (www.digitalengineeringlibrary.com)
Copyright © 2004 The McGraw-Hill Companies. All rights reserved.
Any use is subject to the Terms of Use as given at the website.

STRATCO EFFLUENT REFRIGERATED H2SO4 ALKYLATION PROCESS

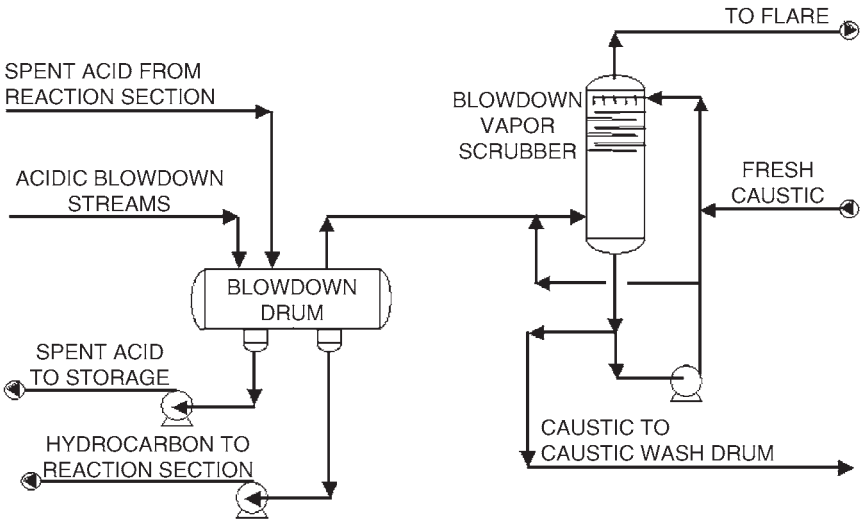

FIGURE 1.2.9 Blowdown system.

reactions will be promoted which result in a heavy, low-octane product and high acid consumption.

Since the early days of alkylation, the Contactor reactor has been recognized as the superior alkylation reactor with higher product quality and lower acid consumption than those of competitive designs. However, STRATCO continues to modify and improve the Contactor reactor to further optimize the desirable alkylation reaction. Several of these improvements are listed next.

The modern Contactor reactor has an eccentric shell as opposed to a concentric shell in older models. The eccentric shell design provides superior mixing of the acid and hydrocarbons and eliminates any localized "dead" zones where polymerization reactions can occur. The result is improved product quality and substantially lower acid consumption.

The heat exchange bundle in the Contactor reactor has been modified to improve the flow path of the acid/hydrocarbon mixture around the tubes. Since this results in improved heat transfer, the temperature gradient across the reaction zone is quite small. This results in optimal reaction conditions.

The heat exchange area per Contactor reactor has been increased by more than 15 percent compared to that in older models. This has resulted in an increased capacity per Contactor reactor and also contributes to continual optimization of the reaction conditions.

The design of the internal feed distributor has been modified to ensure concurrent contact of the acid catalyst and olefin/isobutane mixture at the point of initial contact.

The Contactor reactor hydraulic head has been modified to include a modern, cartridge-type mechanical seal system. This results in a reliable, easy-to-maintain, and long-lasting seal system.

STRATCO offers two types of mechanical seals: a single mechanical seal with a Teflon sleeve bearing and a double mechanical seal with ball bearings that operates with a barrier fluid. The STRATCO Contactor reactors can be taken off-line individually if any maintenance is required. If seal replacement is required during normal operation, the Contactor reactor can be isolated, repaired, and back in service in less than 24 h.

Downloaded from Digital Engineering Library @ McGraw-Hill (www.digitalengineeringlibrary.com)
Copyright © 2004 The McGraw-Hill Companies. All rights reserved.
Any use is subject to the Terms of Use as given at the website.

STRATCO EFFLUENT REFRIGERATED H2SO4 ALKYLATION PROCESS

Process Improvements

Several process modifications have been made to provide better alkylation reaction conditions and improve overall unit operations. Some of these modifications are as follows:

Acid retention time in the acid settler has been reduced by employing coalescing media in the acid settler. The reduced retention time minimizes the potential for undesirable polymerization reactions in the acid settler. Two stages of coalescing are employed to separate the hydrocarbon product from the acid phase. The first stage results in a 90 vol % H_2SO_4 stream that is recycled to the Contactor reactor. The second stage reduces the acid carryover rate to only 10 to 15 vol ppm. This is at least a threefold decrease in comparison to simple gravity settling with a typical 50 to 100 vol ppm in the hydrocarbon stream.

Fresh H_2SO_4 is continuously added to the unit, and spent H_2SO_4 is continuously withdrawn. In multiple-Contactor reactor units, the H_2SO_4 flows in series between the Contactor reactors. Thus, the acid strength across the unit is held at its most effective value, and the acid strength at any one location in the unit does not vary with time. This method of handling H_2SO_4 provides a very stable operation and continual acid strength optimization.

To ensure complete and intimate mixing of the olefin and isobutane feeds before contacting with the acid catalyst, these hydrocarbon feeds are premixed outside the Contactor reactor and introduced as one homogeneous stream.

Alkyl sulfates are removed in a fresh acid wash coalescer/warm alkaline water wash. Afterward, the net effluent stream is washed with fresh process water to remove traces of caustic, then is run through a coalescer to remove free water before being fed to the DIB tower. This system is superior to the caustic wash/water wash system which was implemented in older designs.

The fractionation system can be designed to accommodate makeup isobutane of any purity, eliminating the need for upstream fractionation of the makeup isobutane.

The alkylation unit is designed to take maximum advantage of the refinery's steam and utility economics. Depending upon these economics, the refrigeration compressor and/or Contactor reactors can be driven with steam turbines (condensing or noncondensing) or electric motors, to minimize unit operating costs.

STRATCO now employs a cascading caustic system in order to minimize the volume and strength of the waste caustic (NaOH) stream from the alkylation unit. In this system, fresh caustic is added to the blowdown vapor scrubber, from which it is cascaded to the depropanizer feed caustic wash and then to the alkaline water wash. The only waste stream from the alkylation unit containing caustic is the spent alkaline water stream. The spent alkaline water stream has a very low concentration of NaOH (< 0.05 wt %) and is completely neutralized in the neutralization system before being released to the refinery wastewater treatment facility. Since the cascading system maintains a continuous caustic makeup flow, it has the additional advantages of reduced monitoring requirements and reduced chance of poor treating due to inadequate caustic strength.

H_2SO_4 ALKYLATION PROCESS COMPARISON

The most important variables that affect product quality in a sulfuric acid alkylation unit are temperature, mixing, space velocity, acid strength, and concentration of isobutane feed in the reactor(s). It is usually possible to trade one operating variable for another, so there is often more than one way to design a new plant to meet octane requirements with a given olefin feed.

Going beyond the customary alkylation process variables, STRATCO has developed unique and patented expertise in separate processing of different olefin feeds. This tech-

Downloaded from Digital Engineering Library @ McGraw-Hill (www.digitalengineeringlibrary.com)
Copyright © 2004 The McGraw-Hill Companies. All rights reserved.
Any use is subject to the Terms of Use as given at the website.

STRATCO EFFLUENT REFRIGERATED H2SO4 ALKYLATION PROCESS

nology can improve product quality compared to alkylation of the same olefins mixed together.

The two major H_2SO_4 alkylation processes are the STRATCO effluent refrigerated process and the autorefrigerated process by design; these two processes take different approaches to achieve product quality requirements. These design differences and their impacts on operability and reliability are discussed below.

Cooling and Temperature Control

The STRATCO effluent refrigerated process utilizes a liquid-full reactor/acid settler system. The heat of reaction is removed by an internal tube bundle. In the autorefrigerated process, the heat of reaction is removed by operating the reactor at a pressure where the acid/hydrocarbon mixture boils. The autorefrigerated reactor and acid settler therefore contain a vapor phase above the two mixed liquid phases. Both systems can be operated in the same temperature range. However, the STRATCO system is much easier to operate.

Temperature control in the STRATCO effluent refrigerated process is simpler than that in the autorefrigerated process. The pressure of the refrigerant flash drum is used to control the operating temperature of all the Contactor reactors in the reaction zone. The autorefrigerated process requires two or more pressure zones per reactor to control temperature and to maintain liquid flow between the reactor zones.

Good control of the acid/hydrocarbon ratio in a sulfuric acid alkylation reactor is critical to reactor performance. This is the area in which the STRATCO system has its largest operability advantage. Since the Contactor reactor system operates liquid-full, gravity flow is used between the Contactor reactor and acid settler. The Contactor/settler system is hydraulically designed to maintain the optimum acid-to-hydrocarbon ratio in the reactor as long as the acid level in the acid settler is controlled in the correct range. The acid/hydrocarbon ratio in the Contactor reactor can be easily verified by direct measurement. In contrast, the autorefrigerated process requires manipulation of an external acid recycle stream in order to control the acid/hydrocarbon ratio in the reactor. As a result, the acid/hydrocarbon ratio in the different mixing zones varies and cannot be readily measured.

The Contactor reactor/settler system is also designed to minimize acid inventory in the acid settler. Minimizing the unmixed acid inventory suppresses undesirable side reactions which degrade product quality and increase acid consumption. Quick, clean separation of the acid and hydrocarbon phases is much more difficult in the boiling autorefrigerated process.

When operated at the same temperature, the effluent refrigerated system requires somewhat greater refrigeration compressor horsepower than the autorefrigerated process because of resistance to heat transfer across the tube bundle.

Mixing

The topic of mixing in a sulfuric acid alkylation unit encompasses (1) the mixing of the isobutane and olefin feeds outside the reactor, (2) the method of feed injection, and (3) the mixing intensity inside the reactor. The best-quality alkylate is produced with the lowest acid consumption when

- The "local" isobutene/olefin ratio in the mixing zone is maximized by premixing the olefin and isobutane feeds.
- The feed is rapidly dispersed into the acid/hydrocarbon emulsion.
- Intense mixing gives the emulsion a high interfacial area.

Downloaded from Digital Engineering Library @ McGraw-Hill (www.digitalengineeringlibrary.com)
Copyright © 2004 The McGraw-Hill Companies. All rights reserved.
Any use is subject to the Terms of Use as given at the website.

STRATCO EFFLUENT REFRIGERATED H2SO4 ALKYLATION PROCESS

In STRATCO's effluent refrigerated process, all the isobutane sent to the reactors is premixed with olefin feed, maximizing the "local" isobutane concentration at the feed point. The feed mixture is rapidly dispersed into the acid catalyst via a special injection nozzle. Mixing occurs as the acid/hydrocarbon emulsion passes through the hydraulic head impeller and as it circulates through the tube bundle.

The tube bundle in the Contactor reactor is an integral part of the mixing system. The superior mixing in the Contactor reactor produces an emulsion with a high interfacial area, even heat dissipation, and uniform distribution of the hydrocarbons in the acid. Intense mixing reduces the temperature gradient within the Contactor's 11,500-gal volume to less than 1°F. The result is suppression of olefin polymerization reactions in favor of the alkylation reaction. Good mixing is particularly important when the olefin feed contains propylene.

In the autorefrigerated process, only a portion of the isobutane is premixed with the olefin feed. The "local" concentration of isobutane is therefore lower when the feeds first make contact with acid catalyst. The less intensive mixing in the autorefrigerated process can result in nonuniform distribution of the hydrocarbons in the acid. The desired finely dispersed hydrocarbon in acid emulsion cannot be easily controlled throughout the different reaction zones. As a consequence, the autorefrigerated alkylation process must be operated at a very low space velocity and temperature to make up for its disadvantage in mixing.

Acid Strength

The acid cascade system employed by STRATCO provides a higher average acid strength in the reaction zone than can usually be accomplished with large autorefrigerated reactors. The higher average acid strength results in higher alkylate octane with reduced acid consumption. STRATCO has recently completed pilot-plant studies that enable us to optimize the acid cascade system for different plant capacities. Large autorefrigerated reactors must be designed for lower space velocity and/or lower operating temperature to compensate for this difference.

Isobutane Concentration and Residence Time in the Reactor

Since the Contactor reactor is operated liquid-full, all the isobutane fed to the reactor is available for reaction. In the autorefrigerated process, a portion of the isobutane fed to the reactor is vaporized to provide the necessary refrigeration. The isobutane is also diluted by reaction products as it cascades through the reactor. To match the liquid-phase isobutane concentration in the STRATCO process, the deisobutanizer recycle rate and/or purity in the autorefrigerated process must be increased to compensate for the dilution and isobutane flashed. The DIB operating costs will therefore be higher for the autorefrigerated process unless other variables such as space velocity or temperature are used to compensate for a lower isobutane concentration.

Research studies have shown that trimethylpentanes, the alkylate components which have the highest octane, are degraded by extended contact with acid. It is therefore desirable to remove alkylate product from the reactor as soon as it is produced. STRATCO Contactor reactors operate in parallel for the hydrocarbons and approach this ideal more closely than the series operation of reaction zones in autorefrigerated reactors.

Reliability

One of the primary factors affecting the reliability of an alkylation unit is the number and type of mechanical seals required in the reaction zone.

Downloaded from Digital Engineering Library @ McGraw-Hill (www.digitalengineeringlibrary.com)
Copyright © 2004 The McGraw-Hill Companies. All rights reserved.
Any use is subject to the Terms of Use as given at the website.

STRATCO EFFLUENT REFRIGERATED H2SO4 ALKYLATION PROCESS

Each Contactor reactor has one mechanical seal. STRATCO offers two types of mechanical seals; a single mechanical seal with a Teflon sleeve bearing and a double mechanical seal with ball bearings that operates with a barrier fluid. The Contactor reactors can be taken off-line individually if any maintenance is required. If seal replacement is required during normal operation, the Contactor reactor can be isolated, repaired, and back in service in less than 24 h.

The number of mechanical seals required for autorefrigerated reactor systems is higher. An agitator for every reactor compartment and redundant acid recycle pumps are required. The dry running seals often used on autorefrigerated reactor agitators have a shorter expected life than STRATCO's double mechanical seal. While special agitators are available which allow mechanical seals to be replaced without shutting down the reactor, many refiners' safety procedures require the autorefrigerated reactor to be shut down for this type of maintenance. It is common practice to shut down the agitator and stop feed to a reactor chamber in the event of agitator seal or shaft problems. Product quality will then be degraded until the reactor can be shut down for repairs.

Separate Processing of Different Olefin Feeds

Olefin feed composition is not normally an independent variable in an alkylation unit. STRATCO has recently developed unique and patented expertise in the design of alkylation units which keep different olefin feeds separate and alkylate them in separate reactors. By employing this technology, each olefin can be alkylated at its optimum conditions while avoiding the "negative synergy" which occurs when certain olefins are alkylated together. This know-how provides an advantage with mixtures of propylene, butylene, and amylene, and with mixtures of iso- and normal olefins. As a result, alkylate product quality requirements can be met at more economical reaction conditions.

COMMERCIAL DATA

STRATCO alkylation technology is responsible for about 35 percent of the worldwide production of alkylate and about 74 percent of sulfuric acid alkylation production. Of the 276,000 bbl/day of alkylation capacity added from 1991 to 2001, about 81 percent is STRATCO technology.

Capital and Utility Estimates

Total estimated inside battery limit (ISBL) costs for grassroots STRATCO effluent refrigerated alkylation units are shown in Table 1.2.1.

Utility and chemical consumption for an alkylation unit can vary widely according to feed composition, product specifications, and design alternatives. The values in Table 1.2.2 are averages of many designs over the last several years and reflect mainly butylene feeds with water cooling and electrical drivers for the compressor and Contactor reactors. Steam and cooling water usage has crept up in recent years as a result of lower RVP targets for the alkylate product. The acid consumption given in the table does not include the consumption due to feed contaminants.

More information on alkylate properties and STRATCO's H_2SO_4 effluent refrigerated alkylation process is available at www.stratco.dupont.com.

Downloaded from Digital Engineering Library @ McGraw-Hill (www.digitalengineeringlibrary.com)
Copyright © 2004 The McGraw-Hill Companies. All rights reserved.
Any use is subject to the Terms of Use as given at the website.

STRATCO EFFLUENT REFRIGERATED H2SO4 ALKYLATION PROCESS

TABLE 1.2.1 Estimated Erected Costs (U.S., ±30%)

Mid-1999 U.S. Gulf Coast basis

Production capacity, BPD	Total erected costs, $/bbl
5,000	5,000
12,000	4,500
20,000	4,000

TABLE 1.2.2 Estimated Utilities and Chemicals (per Barrel of Alkylate Production)

Electric power, kW	15
Cooling water, gal	1370
Process water, gal	4
Steam, lb	194
Fresh acid, lb	13
NaOH, lb	0.05

REFERENCES

1. D. C. Graves, K. E. Kranz, D. M. Buckler, and J. R. Peterson, "*Alkylation Best Practices for the New Millennium*," NPRA Annual Meeting in Baton Rouge, La., 2001.
2. D. C. Graves, "*Alkylation Options for Isobutylene and Isopentane*," ACS meeting, 2001.
3. J. R. Peterson, D. C. Graves, K. E. Kranz, and D. M. Buckler, "*Improved Amylene Alkylation Economics*," NPRA Annual Meeting, 1999.
4. K. E. Kranz and D. C. Graves, "*Olefin Interactions in Sulfuric Acid Catalyzed Alkylation*," Arthur Goldsby Symposium, Division of Petroleum Chemistry, 215th National Meeting of the American Chemical Society (ACS), Dallas, Tex., 1998.
5. D. C. Graves, K. E. Kranz, J. K. Millard, and L. F. Albright, *Alkylation by Controlling Olefin Ratios*. Patent 5,841,014, issued 11/98.
6. D. C. Graves, K. E. Kranz, J. K. Millard, and L. F. Albright, *Alkylation by Controlling Olegin Ratios*. Patent 6,194,625, issued 2/01.

Downloaded from Digital Engineering Library @ McGraw-Hill (www.digitalengineeringlibrary.com)
Copyright © 2004 The McGraw-Hill Companies. All rights reserved.
Any use is subject to the Terms of Use as given at the website.

Source: HANDBOOK OF PETROLEUM REFINING PROCESSES

CHAPTER 1.3
UOP ALKYLENE™ PROCESS FOR MOTOR FUEL ALKYLATION

Cara Roeseler
UOP LLC
Des Plaines, Illinois

INTRODUCTION

The UOP Alkylene process is a competitive and commercially available alternative to liquid acid technologies for alkylation of light olefins and isobutane. Alkylate is a key blending component for gasoline having high octane, low Reid vapor pressure (RVP), low sulfur, and low volatility. It is composed of primarily highly branched paraffinic hydrocarbons. Changing gasoline specifications in response to legislation will increase the importance of alkylate, making it an ideal "clean fuels" blend stock. Existing liquid acid technologies, while well proven and reliable, are increasingly under political and regulatory pressure to reduce environmental and safety risks through increased monitoring and risk mitigation. A competitive solid catalyst alkylation technology, such as the Alkylene process, would be an attractive alternative to liquid acid technologies.

UOP developed the Alkylene process during the late 1990s, in response to the industry's need for an alternative to liquid acid technologies. Early attempts with solid acid catalysts found some to have good alkylation properties, but the catalysts also had short life, on the order of hours. In addition, these materials could not be regenerated easily, requiring a carbon burn step. Catalysts with acid incorporated on a porous support had been investigated but not commercialized. UOP invented the novel HAL-100 catalyst that has high alkylation activity and long catalyst stability and easily regenerates without a high-temperature carbon burn. Selectivity of the HAL-100 is excellent, and product quality is comparable to that of the product obtained from liquid acid technologies.

ALKYLENE PROCESS

Olefins react with isobutane on the surface of the HAL-100 catalyst to form a complex mixture of isoalkanes called alkylate. The major constituents of alkylate are highly branched trimethylpentanes (TMP) that have high-octane blend values of approximately

Downloaded from Digital Engineering Library @ McGraw-Hill (www.digitalengineeringlibrary.com)
Copyright © 2004 The McGraw-Hill Companies. All rights reserved.
Any use is subject to the Terms of Use as given at the website.

UOP ALKYLENE™ PROCESS FOR MOTOR FUEL ALKYLATION

100. Dimethyl hexanes (DMH) have lower-octane blend values and are present in alkylate at varying levels.

Alkylation proceeds via a carbenium ion mechanism, as shown in Fig. 1.3.1. The complex reaction paths include an initiation step, a propagation step, and hydrogen transfer. Secondary reactions include polymerization, isomerization, and cracking to produce other isoalkanes including those with carbon numbers which are not multiples of 4. The primary reaction products are formed via simple addition of isobutane to an olefin such as propylene, butenes, and amylenes. The key reaction step is the protonation of a light olefin on the solid catalyst surface followed by alkylation of an olefin on the C_4 carbocation, forming the C_8 carbocation. Hydride transfer from another isobutane molecule forms the C_8 paraffin product. Secondary reactions result in less desirable products, both lighter and heavier than the high-octane C_8 products. Polymerization to acid-soluble oil (ASO) is found in liquid acid technologies and results in additional catalyst consumption and yield loss. The Alkylene process does not produce acid-soluble oil. The Alkylene process also has minimal polymerization, and the alkylate has lighter distillation properties than alkylate from HF or H_2SO_4 liquid acid technologies.

Alkylation conditions that favor the desired high-octane trimethylpentane include low process temperature, high localized isobutane/olefin ratios, and short contact time between the reactant and catalyst. The Alkylene process is designed to promote quick, intimate contact of short duration between hydrocarbon and catalyst for octane product, high yield, and efficient separation of alkylate from the catalyst to minimize undesirable secondary reactions. Alkylate produced from the Alkylene process is comparable to alkylate produced from traditional liquid acid technologies without the production of heavy acid-soluble oil. The catalyst is similar to other hydroprocessing and conversion catalysts used in a typical refinery. Process conditions are mild and do not require expensive or exotic metallurgy.

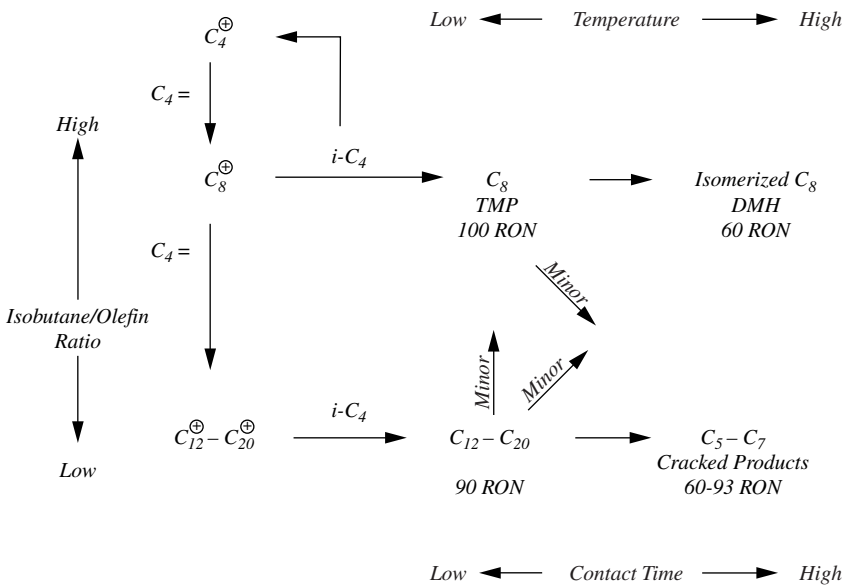

FIGURE 1.3.1 Reaction mechanism.

Downloaded from Digital Engineering Library @ McGraw-Hill (www.digitalengineeringlibrary.com)
Copyright © 2004 The McGraw-Hill Companies. All rights reserved.
Any use is subject to the Terms of Use as given at the website.

UOP ALKYLENE™ PROCESS FOR MOTOR FUEL ALKYLATION

Reactor temperature, isobutene/olefin ratio, contact time, and catalyst/olefin ratios are the key operating parameters.

Feeds to the Alkylene unit are dried and treated to move impurities and contaminants such as diolefins, oxygenates, nitrogen, and sulfur. These contaminants also cause higher acid consumption, higher acid-soluble oil formation, and lower acid strength in liquid acid technologies. Diolefin saturation technology, such as the Huels Selective Hydrogenation Process technology licensed by UOP LLC, saturates diolefins to the corresponding monoolefin and isomerizes the 1-butene to 2-butene. The alkylate formed by alkylating isobutane with 2-butene is the preferred 2,2,3-TMP compared to the 2,2-DMH formed by alkylating isobutane with 1-butene.

The olefin and isobutane (Fig. 1.3.2) are combined and injected into a carbon-steel riser reactor with continuous catalyst reactivation (Fig. 1.3.3) to maintain a constant catalyst activity and minimize catalyst inventory. This provides constant product quality, high yield, and high on-stream efficiency. Liquid-phase hydrocarbon reactants transport the catalyst around the reactor circuit where velocities are low relative to those of other moving catalyst processes. The reaction time is on the order of minutes for the completion of the primary reactions and to minimize secondary reactions. The catalyst and hydrocarbon are intimately mixed during the reaction, and the catalyst is easily disengaged from the hydrocarbon product at the top of the reactor. The catalyst is reactivated by a simple hydrogenation of the heavier alkylate on the catalyst in the reactivation wash zone. Hydrogen consumption is minimal as the quantity of heavy alkylate on the HAL-100 catalyst is very small. The reactivation process is highly effective, restoring the activity of the catalyst to nearly 100 percent of fresh. The liquid-phase operation of the Alkylene process results in less abrasion than in other catalyst circulation processes due to the lubricating effect of the liquid. Furthermore, the catalyst and hydrocarbon velocities are low relative to those in other moving catalyst processes. This minimizes the catalyst replacement requirements. Catalyst circulation is maintained to target catalyst/olefin ratios. A small catalyst slipstream flows into a separate vessel for reactivation in vapor phase with relatively mild conditions to remove any last traces of heavy material and return the catalyst activity to essentially the activity of fresh catalyst.

Alkylate from the reactor is sent to a downstream fractionation section, which is similar to fractionation sections in liquid acid process flow schemes. The fractionation section recycles the unconverted isobutane back to the reactor and separates out the final alkylate product.

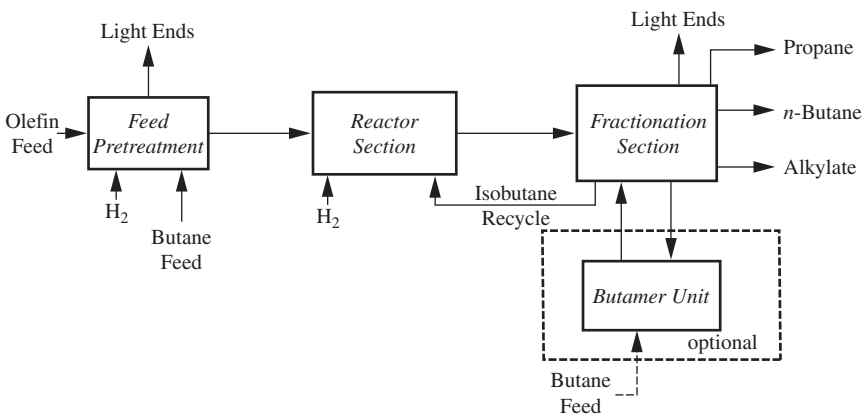

FIGURE 1.3.2 Alkylene process flow scheme.

Downloaded from Digital Engineering Library @ McGraw-Hill (www.digitalengineeringlibrary.com)
Copyright © 2004 The McGraw-Hill Companies. All rights reserved.
Any use is subject to the Terms of Use as given at the website.

UOP ALKYLENE™ PROCESS FOR MOTOR FUEL ALKYLATION

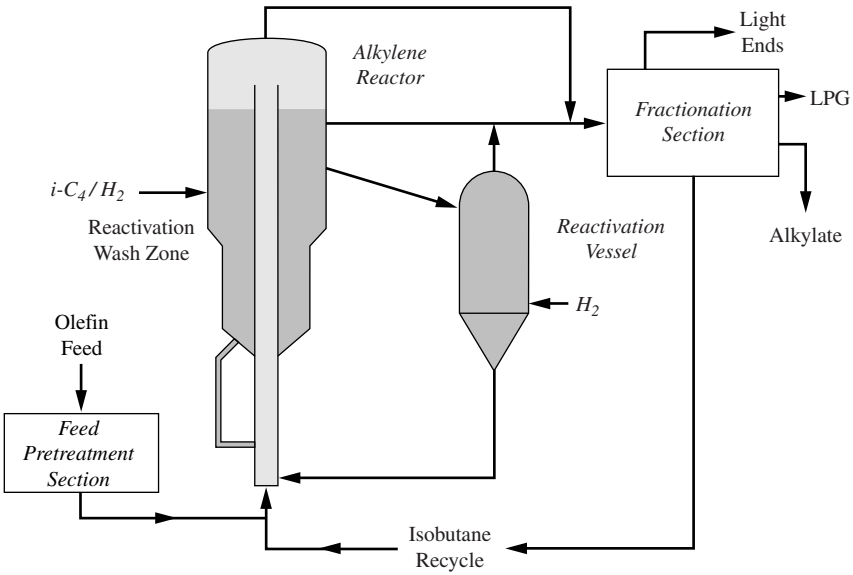

FIGURE 1.3.3 Alkylene process flow diagram.

ALKYLENE PERFORMANCE

HAL-100, the Alkylene process catalyst, has high acidity to promote desirable alkylation reactions. It has optimum particle size and pore distribution to allow for good mass transfer of reactants and products into and out of the catalyst. The catalyst has been commercially produced and demonstrates high physical strength and very low attrition rates in extensive physical testing. Catalyst attrition rates are several orders of magnitude lower than those experienced in other moving-bed regeneration processes in the refining industry.

HAL-100 has been demonstrated in a stability test of 9 months with full isobutane recycle and showed excellent alkylate product qualities as well as catalyst stability. Performance responses to process parameters such as isobutane/olefin ratio, catalyst/olefin ratio, and process temperature were measured. Optimization for high performance, catalyst stability, and economic impact results in a process technology competitive with traditional liquid acid technologies (Fig. 1.3.4).

Typical light olefin feedstock compositions including propylene, butylenes, and amylenes were also studied. The primary temporary deactivation mechanism is the blockage of the active sites by heavy hydrocarbons. These heavy hydrocarbons are significantly lower in molecular weight than acid-soluble oil that is typical of liquid acid technologies. These heavy hydrocarbons are easily removed by contacting the catalyst with hydrogen and isobutane to strip them from the catalyst surface. These heavy hydrocarbons are combined in the total alkylate product pool and are accounted for in the alkylate properties from the Alkylene process.

The buildup of heavy hydrocarbons on the catalyst surface is a function of the operating severity and the feedstock composition. The reactivation conditions and the frequency of vapor reactivation are optimized in order to achieve good catalyst stability as well as commercially economical conditions.

Downloaded from Digital Engineering Library @ McGraw-Hill (www.digitalengineeringlibrary.com)
Copyright © 2004 The McGraw-Hill Companies. All rights reserved.
Any use is subject to the Terms of Use as given at the website.

UOP ALKYLENE™ PROCESS FOR MOTOR FUEL ALKYLATION

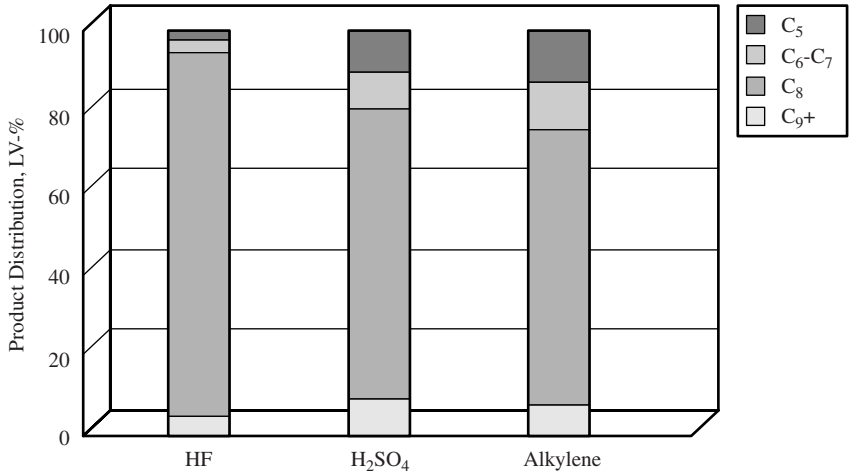

	HF	H_2SO_4	Alkylene
RON	**95.7**	**96.6**	**97.0**
MON	**94.2**	**93.6**	**94.2**
Temp, °F	**100**	**50**	**77**
Temp, °C	**38**	**10**	**25**

FIGURE 1.3.4 Catalyst comparison: mixed 4 olefin feed.

ENGINEERING DESIGN AND OPTIMIZATION

The liquid transport reactor for the Alkylene process was developed by UOP based on extensive UOP experience in fluid catalytic cracking (FCC) and continuous catalyst regeneration (CCR) technologies. Novel engineering design concepts were incorporated. Extensive physical modeling and computational fluid dynamics modeling were used to verify key engineering design details. More than 32 patents have been issued for the Alkylene process technology.

The reactor is designed to ensure excellent mixing of catalyst and hydrocarbon with little axial dispersion as the mixture moves up the riser. This ensures sufficient contact time and reaction time for alkylation. Olefin injection nozzles have been engineered to minimize high olefin concentration at the feed inlet to the riser. The catalyst is quickly separated from the hydrocarbon at the top of the riser and falls by gravity into the reactivation zone. The catalyst settles into a packed bed that flows slowly downward in the upper section of the vessel, where it is contacted with low-temperature hydrogen saturated isobutane recycle. The heavy hydrocarbons are hydrogenated and desorbed from the catalyst. The reactivated catalyst flows down standpipes and back into the bottom of the riser. The reactor section includes separate vessels for reactivating a slipstream of catalyst at a higher temperature to completely remove trace amounts of heavy hydrocarbons. By returning freshly reactivated catalyst to the riser continuously, catalyst activity is maintained for consistent performance.

The UOP Butamer process catalytically converts normal butane to isobutane with high selectivity, minimum hydrogen consumption, and excellent catalyst stability. When the Butamer process is combined with the Alkylene process, *n*-butane in the feed can be reacted to extinction, thereby reducing the fresh feed saturate requirements. In addition, the

Downloaded from Digital Engineering Library @ McGraw-Hill (www.digitalengineeringlibrary.com)
Copyright © 2004 The McGraw-Hill Companies. All rights reserved.
Any use is subject to the Terms of Use as given at the website.

UOP ALKYLENE™ PROCESS FOR MOTOR FUEL ALKYLATION

increased isobutane concentration in the isostripper reduces the size of the isostripper and allows for a reduction in utilities consumption. A novel flow scheme for the optimal integration of the Butamer process into the Alkylene process was developed. The two units can share common fractionation and feed pretreatment equipment. Synergy of the two units reduces the capital cost requirement for the addition of the Butamer process and reduces the operating cost. Table 1.3.1 illustrates the maximum utilization of the makeup C_4 paraffin stream and the utilities savings.

ALKYLENE PROCESS ECONOMICS

The product research octane number can be varied according to the reaction temperature and the isobutane/olefin ratio. Additional refrigeration duty can be justified by higher product octane, depending on the needs of the individual refiner. Higher isobutane/olefin ratio requires higher capital and utilities. Mixed propylene and butylene feedstocks can also be processed with less dependence on operating temperature. However, the alkylate product octane is typically lower from mixed propylene and butylene feed than from butylene-only feed. Processing some amylenes with the butylenes will result in slightly lower octane. Most refiners have blended the C_5 stream in the gasoline pool. However, with increasing restrictions on Reid vapor pressure, refiners are pulling C_5 out of the gasoline pool and processing some portion in alkylation units.

The three cases shown in Table 1.3.2 compare the economics of the Alkylene process with those of conventional liquid acid alkylation. The basis is 8000 BPSD of alkylate product from the Alkylene process. Case 1 is the Alkylene process, case 2 is an HF alkylation unit, and case 3 is a sulfuric acid unit with on-site acid regeneration. All cases include a Butamer process to maximize feed utilization.

The Alkylene process has a yield advantage over liquid acid alkylation technologies and does not produce acid-soluble oil (ASO) by-products. In addition, the capital cost of the Alkylene process is competitive compared with existing technologies, and maintenance costs are lower. The HF alkylation unit requires HF mitigation capital and operating costs. The sulfuric acid alkylation unit requires regeneration or transport of large volumes of acid. Overall, the Alkylene process is a safe and competitive option for today's refiner.

SUMMARY

Future gasoline specifications will require refiners to maximize the use of assets and rebalance refinery gasoline pools. The potential phase-out of MTBE will create the need for

TABLE 1.3.1 Alkyene Process Capital Costs

	Alkylene	Alkylene + Butamer
Total feed from FCC, BPSD	7064	7064
C_4 paraffin makeup	9194	2844
C_5+ alkylate, BPSD	8000	8000
C_5+ alkylate RONC	95.0	95.0
USGC EEC, million $	43.0	43.7
Utilities	Base	0.96*Base

Downloaded from Digital Engineering Library @ McGraw-Hill (www.digitalengineeringlibrary.com)
Copyright © 2004 The McGraw-Hill Companies. All rights reserved.
Any use is subject to the Terms of Use as given at the website.

UOP ALKYLENE™ PROCESS FOR MOTOR FUEL ALKYLATION

TABLE 1.3.2 Comparison of Alkylation Options

	Alkylene + Butamer	HF + Butamer	On-site regeneration H_2SO_4 + Butamer
Total feed from FCC, BPSD	7064	7064	7064
C_5+ alkylate, BPSD	8000	7990	7619
C_5+ alkylate			
RONC	95.0	95.2	95.0
MONC	92.9	93.3	92.2
$(R + M) / 2$	94.0	94.3	93.6
C_5+ alkylate D-86, °F			
50%	213	225	21
90%	270	290	29
Utilities, \$/bbl C_5 + alkylate	174	0.70	1.32
Acid cost, \$/bbl	—	0.08	0.01
Catalyst cost, \$/bbl	0.60	0.02	0.02
Metals recovery, \$/bbl	0.03	0.00	0.00
Chemical cost, \$/bbl	0.03	0.02	0.02
Variable cost of production, \$/bbl	2.39	0.82	1.37
Fixed cost, \$/bbl	1.97	2.43	3.53
Total cost of production, \$/bbl	4.37	3.25	4.90
Estimated erected cost, million \$	43.5	40.5	63.3

clean, high-octane blending components, such as alkylate, to allow refiners to meet pool requirements without adding aromatics, olefins, or RVP. Alkylate from the Alkylene process has excellent alkylate properties equivalent to those of HF acid technology, does not generate ASO, has better alkylate yield, and is a safe alternative to liquid acid technologies. Recent developments propel the Alkylene process technology into the marketplace as a viable option with technical and economic benefits.

As the demand for alkylate continues to grow, new alkylation units will help refiners meet the volume and octane requirements of their gasoline pools. The Alkylene process was developed as a safe alternative to commercial liquid acid alkylation technologies.

BIBLIOGRAPHY

Cara M. Roeseler, Steve M. Black, Dale J. Shields, and Chris D. Gosling, "*Improved Solid Catalyst Alkylation Technology for Clean Fuels: The Alkylene Process*," NPRA Annual Meeting, San Antonio, March 2002.

Downloaded from Digital Engineering Library @ McGraw-Hill (www.digitalengineeringlibrary.com)
Copyright © 2004 The McGraw-Hill Companies. All rights reserved.
Any use is subject to the Terms of Use as given at the website.

Downloaded from Digital Engineering Library @ McGraw-Hill (www.digitalengineeringlibrary.com)
Copyright © 2004 The McGraw-Hill Companies. All rights reserved.
Any use is subject to the Terms of Use as given at the website.

Source: HANDBOOK OF PETROLEUM REFINING PROCESSES

CHAPTER 1.4
UOP HF ALKYLATION TECHNOLOGY

Kurt A. Detrick, James F. Himes,
Jill M. Meister, and Franz-Marcus Nowak
UOP
Des Plaines, Ilinois

INTRODUCTION

The UOP* HF Alkylation process for motor fuel production catalytically combines light olefins, which are usually mixtures of propylene and butylenes, with isobutane to produce a branched-chain paraffinic fuel. The alkylation reaction takes place in the presence of hydrofluoric (HF) acid under conditions selected to maximize alkylate yield and quality. The alkylate product possesses excellent antiknock properties and high-octane because of its high content of highly branched paraffins. Alkylate is a clean-burning, low-sulfur, low-RVP gasoline blending component that does not contain olefinic or aromatic compounds.

The HF Alkylation process was developed in the UOP laboratories during the late 1930s and early 1940s. The process was initially used for the production of high-octane aviation fuels from butylenes and isobutane. In the mid-1950s, the development and consumer acceptance of more-sophisticated high-performance automotive engines placed a burden on the petroleum refiner both to increase gasoline production and to improve motor fuel quality. The advent of catalytic reforming techniques, such as the UOP Platforming* process, provided an important tool for the production of high-quality gasolines available to refiners. However, the motor fuel produced in such operations is primarily aromatic-based and is characterized by high sensitivity (that is, the spread between research and motor octane numbers). Because automobile performance is more closely related to road octane rating (approximately the average of research and motor octanes), the production of gasoline components with low sensitivity was required. A natural consequence of these requirements was the expansion of alkylation operations. Refiners began to broaden the range of olefin feeds to both existing and new alkylation units to include propylene and occasionally amylenes as well as butylenes. By the early 1960s, the HF Alkylation process had virtually displaced motor fuel polymerization units for new installations, and refiners had begun to gradually phase out the operation of existing polymerization plants.

The importance of the HF Alkylation process in the refining situation of the 2000s has been increased even further by the scheduled phase-out of MTBE and the increased

*Trademark and/or service mark of UOP.

Downloaded from Digital Engineering Library @ McGraw-Hill (www.digitalengineeringlibrary.com)
Copyright © 2004 The McGraw-Hill Companies. All rights reserved.
Any use is subject to the Terms of Use as given at the website.

UOP HF ALKYLATION TECHNOLOGY

emphasis on low-sulfur gasoline. The contribution of the alkylation process is critical in the production of quality motor fuels including many of the "environmental" gasoline blends. The process provides refiners with a tool of unmatched economy and efficiency, one that will assist refiners in maintaining or strengthening their position in the production and marketing of gasolines.

PROCESS CHEMISTRY

General

In the HF Alkylation process, HF acid is the catalyst that promotes the isoparaffin-olefin reaction. In this process, only isoparaffins with tertiary carbon atoms, such as isobutane or isopentane, react with the olefins. In practice, only isobutane is used because isopentane has a high octane number and a vapor pressure that has historically allowed it to be blended directly into finished gasolines. However, where environmental regulations have reduced the allowable vapor pressure of gasoline, isopentane is being removed from gasoline, and refiner interest in alkylating this material with light olefins, particularly propylene, is growing.

The actual reactions taking place in the alkylation reactor are many and are relatively complex. The equations in Fig. 1.4.1 illustrate the primary reaction products that may be expected for several pure olefins.

In practice, the primary product from a single olefin constitutes only a percentage of the alkylate because of the variety of concurrent reactions that are possible in the alkylation environment. Compositions of pilot-plant products produced at conditions to maximize octane from pure-olefin feedstocks are shown in Table 1.4.1.

Reaction Mechanism

Alkylation is one of the classic examples of a reaction or reactions proceeding via the carbenium ion mechanism. These reactions include an initiation step and a propagation step and may include an isomerization step. In addition, polymerization and cracking steps may be involved. However, these side reactions are generally undesirable. Examples of these reactions are given in Fig. 1.4.2.

Initiation. The initiation step (Fig. 1.4.2*a*) generates the tertiary butyl cations that will subsequently carry on the alkylation reaction.

Propagation. Propagation reactions (Fig. 1.4.2*b*) involve the tertiary butyl cation reacting with an olefin to form a larger carbenium ion, which then abstracts a hydride from an isobutane molecule. The hydride abstraction generates the isoparaffin plus a new tertiary butyl cation to carry on the reaction chain.

Isomerization. Isomerization [Eq. (1.4.12), shown in Fig. 1.4.2*c*] is very important in producing good octane quality from a feed that is high in 1-butene. The isomerization of 1-butene is favored by thermodynamic equilibrium. Allowing 1-butene to isomerize to 2-butene reduces the production of dimethylhexanes (research octane number of 55 to 76) and increases the production of trimethylpentanes. Many recent HF Alkylation units, especially those processing only butylenes, have upstream olefin isomerization units that isomerize the 1-butene to 2-butene.

Downloaded from Digital Engineering Library @ McGraw-Hill (www.digitalengineeringlibrary.com)
Copyright © 2004 The McGraw-Hill Companies. All rights reserved.
Any use is subject to the Terms of Use as given at the website.

UOP HF ALKYLATION TECHNOLOGY

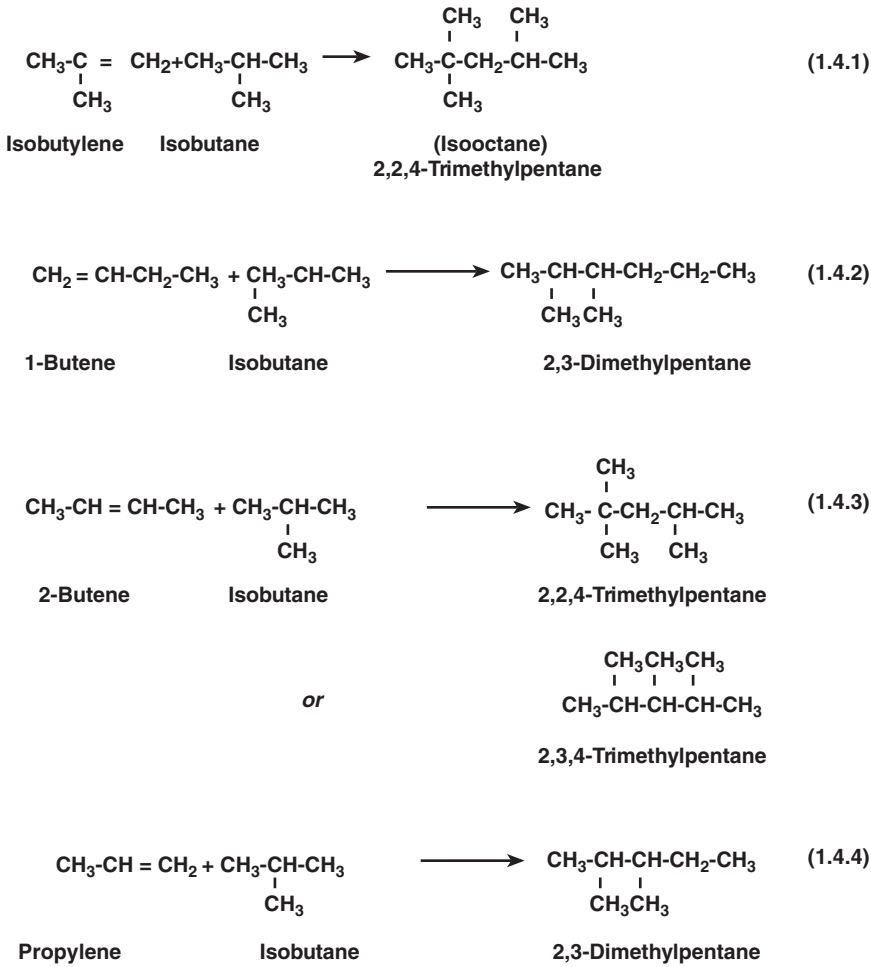

FIGURE 1.4.1 HF alkylation primary reactions for monoolefins.

Equation (1.4.13) is an example of the many possible steps involved in the isomerization of the larger carbenium ions.

Other Reactions. The polymerization reaction [Eq. (1.4.14), shown in Fig. 1.4.2*d*] results in the production of heavier paraffins, which are undesirable because they reduce alkylate octane and increase alkylate endpoint. Minimization of this reaction is achieved by proper choice of reaction conditions.

The larger polymer cations are susceptible to cracking or disproportionation reactions [Eq. (1.4.15)], which form fragments of various molecular weights. These fragments can then undergo further alkylation.

Downloaded from Digital Engineering Library @ McGraw-Hill (www.digitalengineeringlibrary.com)
Copyright © 2004 The McGraw-Hill Companies. All rights reserved.
Any use is subject to the Terms of Use as given at the website.

UOP HF ALKYLATION TECHNOLOGY

TABLE 1.4.1 Compositions of Alkylate from Pure-Olefin Feedstocks

	Olefin			
Component, wt %	C_3H_6	iC_4H_8	C_4H_8-2	C_4H_8-1
C_5 isopentane	1.0	0.5	0.3	1.0
C_6s:				
Dimethylbutanes	0.3	0.8	0.7	0.8
Methylpentanes	—	0.2	0.2	0.3
C_7s:				
2,3-Dimethylpentane	29.5	2.0	1.5	1.2
2,4-Dimethylpentane	14.3	—	—	—
Methylhexanes	—	—	—	—
C_8s:				
2,2,4-Trimethylpentane	36.3	66.2	48.6	38.5
2,2,3-Trimethylpentane	—	—	1.9	0.9
2,3,4-Trimethylpentane	7.5	12.8	22.2	19.1
2,3,3-Trimethylpentane	4	7.1	12.9	9.7
Dimethylhexanes	3.2	3.4	6.9	22.1
C_9+ products	3.7	5.3	4.1	5.7

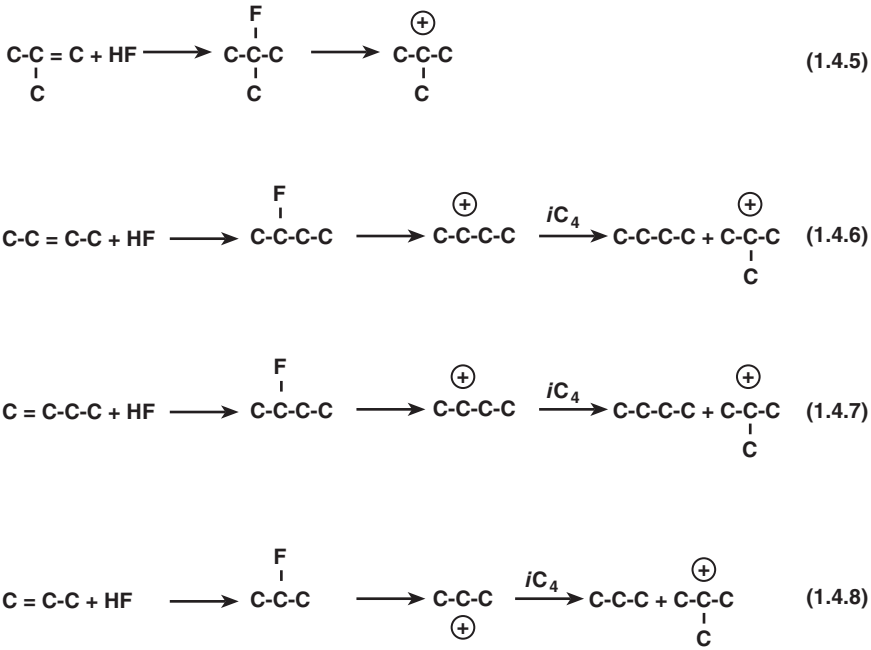

FIGURE 1.4.2*a* HF alkylation reaction mechanism—initiation reactions.

Downloaded from Digital Engineering Library @ McGraw-Hill (www.digitalengineeringlibrary.com)
Copyright © 2004 The McGraw-Hill Companies. All rights reserved.
Any use is subject to the Terms of Use as given at the website.

UOP HF ALKYLATION TECHNOLOGY

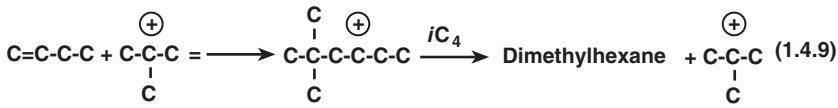

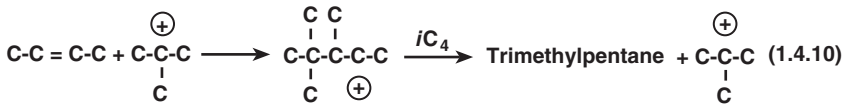

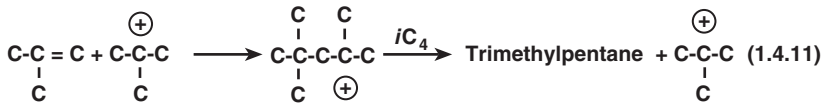

FIGURE 1.4.2*b* HF alkylation reaction mechanism—propagation reactions.

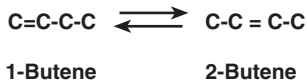

(1.4.12)

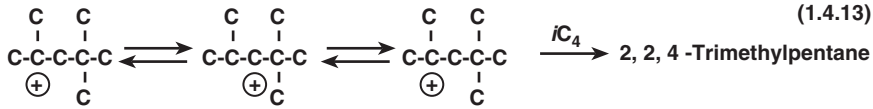

(1.4.13)

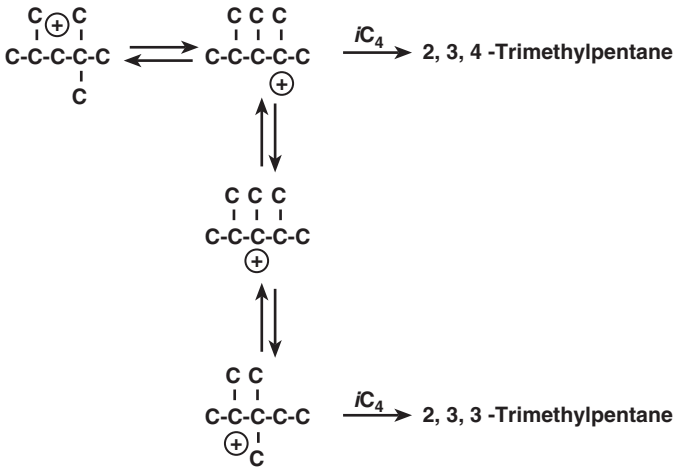

FIGURE 1.4.2*c* HF alkylation reaction mechanism—isomerization.

Downloaded from Digital Engineering Library @ McGraw-Hill (www.digitalengineeringlibrary.com)
Copyright © 2004 The McGraw-Hill Companies. All rights reserved.
Any use is subject to the Terms of Use as given at the website.

UOP HF ALKYLATION TECHNOLOGY

Polymerization **(1.4.14)**

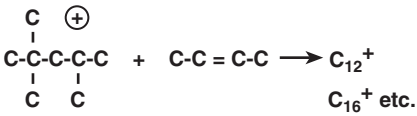

Cracking-Disproportionation **(1.4.15)**

Hydrogen Transfer **(1.4.16)**

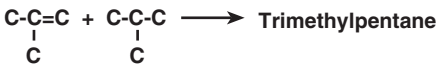

(1.4.17)

Overall Reaction: **(1.4.18)**

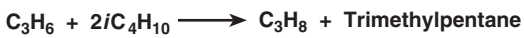

FIGURE 1.4.2*d* HF alkylation reaction mechanism—other.

Hydrogen Transfer. The hydrogen transfer reaction is most pronounced with propylene feed. The reaction also proceeds via the carbenium ion mechanism. In the first reaction [Eq. (1.4.16)], propylene reacts with isobutane to produce butylene and propane. The butylene is then alkylated with isobutane [Eq. (1.4.17)] to form trimethylpentane. The overall reaction is given in Eq. (1.4.18). From the viewpoint of octane, this reaction can be desirable because trimethylpentane has substantially higher octane than the dimethylpentane normally formed from propylene. However, two molecules of isobutane are required for each molecule of alkylate, and so this reaction may be undesirable from an economic viewpoint.

PROCESS DESCRIPTION

The alkylation of olefins with isobutane is complex because it is characterized by simple addition as well as by numerous side reactions. Primary reaction products are the isomer-

Downloaded from Digital Engineering Library @ McGraw-Hill (www.digitalengineeringlibrary.com)
Copyright © 2004 The McGraw-Hill Companies. All rights reserved.
Any use is subject to the Terms of Use as given at the website.

UOP HF ALKYLATION TECHNOLOGY

ic paraffins containing carbon atoms that are the sum of isobutane and the corresponding olefin. However, secondary reactions such as hydrogen transfer, polymerization, isomerization, and destructive alkylation also occur, resulting in the formation of secondary products both lighter and heavier than the primary products.

The factors that promote the primary and secondary reaction mechanisms differ, as does the response of each to changes in operating conditions or design options. Not all secondary reactions are undesirable; for example, they make possible the formation of isooctane from propylene or amylenes. In an ideally designed and operated system, primary reactions should predominate, but not to the complete exclusion of secondary ones. For the HF Alkylation process, the optimum combinations of plant economy, product yield, and quality are achieved with the reaction system operating at cooling-water temperature and an excess of isoparaffin and with contaminant-free feedstocks and vigorous, intimate acid-hydrocarbon contact.

To minimize acid consumption and ensure good alkylate quality, the feeds to the alkylation unit should be dry and of low sulfur content. Normally, a simple desiccant-drying system is included in the unit design package. Feed treating in a UOP Merox* unit for mercaptan sulfur removal can be an economic adjunct to the alkylation unit for those applications in which the olefinic feed is derived from catalytic cracking or from other operations in which feedstocks of significant sulfur content are processed. Simplified flow schemes for a typical C_4 HF Alkylation unit and a C_3-C_4 HF Alkylation unit are shown in Figs. 1.4.3 and 1.4.4.

Treated and dried olefinic feed is charged along with recycle and makeup isobutane (when applicable) to the reactor section of the plant. The combined feed enters the shell of a reactor–heat exchanger through several nozzles positioned to maintain an even temperature throughout the reactor. The heat of reaction is removed by heat exchange with a large volume of coolant flowing through the tubes having a low temperature rise. If cooling water is used, it is then available for further use elsewhere in the unit. The effluent from the reactor enters the settler, and the settled acid is returned to the reactor.

The hydrocarbon phase, which contains dissolved HF acid, flows from the settler and is preheated and charged to the isostripper. Saturate field butane feed (when applicable) is also charged to the isostripper. Product alkylate is recovered from the bottom of the column. Any normal butane that may have entered the unit is withdrawn as a sidecut. Unreacted isobutane is also recovered as a sidecut and recycled to the reactor.

The isostripper overhead consists mainly of isobutane, propane, and HF acid. A drag stream of overhead material is charged to the HF stripper to strip the acid. The overhead from the HF stripper is returned to the isostripper overhead system to recover acid and isobutane. A portion of the HF stripper bottoms is used as flushing material. A net bottom stream is withdrawn, defluorinated, and charged to the gas concentration section (C_3-C_4 splitter) to prevent a buildup of propane in the HF Alkylation unit.

An internal depropanizer is required in an HF Alkylation unit processing C_3-C_4 olefins and may be required with C_4 olefin feedstocks if the quantity of propane entering the unit is too high to be rejected economically as previously described. The isostripper overhead drag stream is charged to the internal depropanizer. Overhead from the internal depropanizer is directed to the HF stripper to strip HF acid from the high-purity propane. A portion of the internal depropanizer bottoms is used as flushing material, and the remainder is returned to the alkylation reactor. The HF stripper overhead vapors are returned to the internal depropanizer overhead system. High-purity propane is drawn off the bottom of the HF stripper, passes through a defluorination step, and is then sent to storage.

A small slipstream of circulating HF acid is regenerated internally to maintain acid purity at the desired level. This technique significantly reduces overall chemical con-

*Trademark and/or service mark of UOP.

Downloaded from Digital Engineering Library @ McGraw-Hill (www.digitalengineeringlibrary.com)
Copyright © 2004 The McGraw-Hill Companies. All rights reserved.
Any use is subject to the Terms of Use as given at the website.

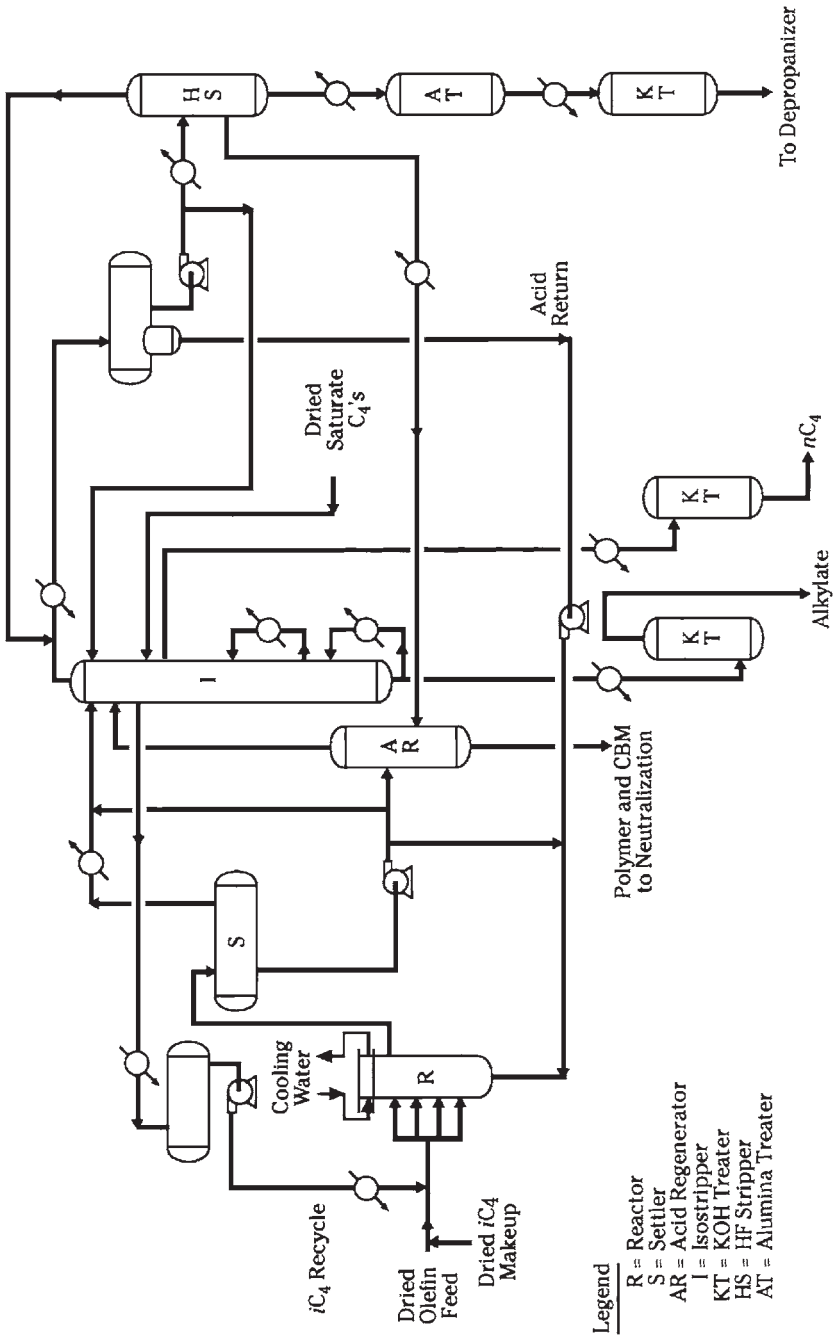

FIGURE 1.4.3 UOP C_4 HF Alkylation process.

Downloaded from Digital Engineering Library @ McGraw-Hill (www.digitalengineeringlibrary.com)
Copyright © 2004 The McGraw-Hill Companies. All rights reserved.
Any use is subject to the Terms of Use as given at the website.

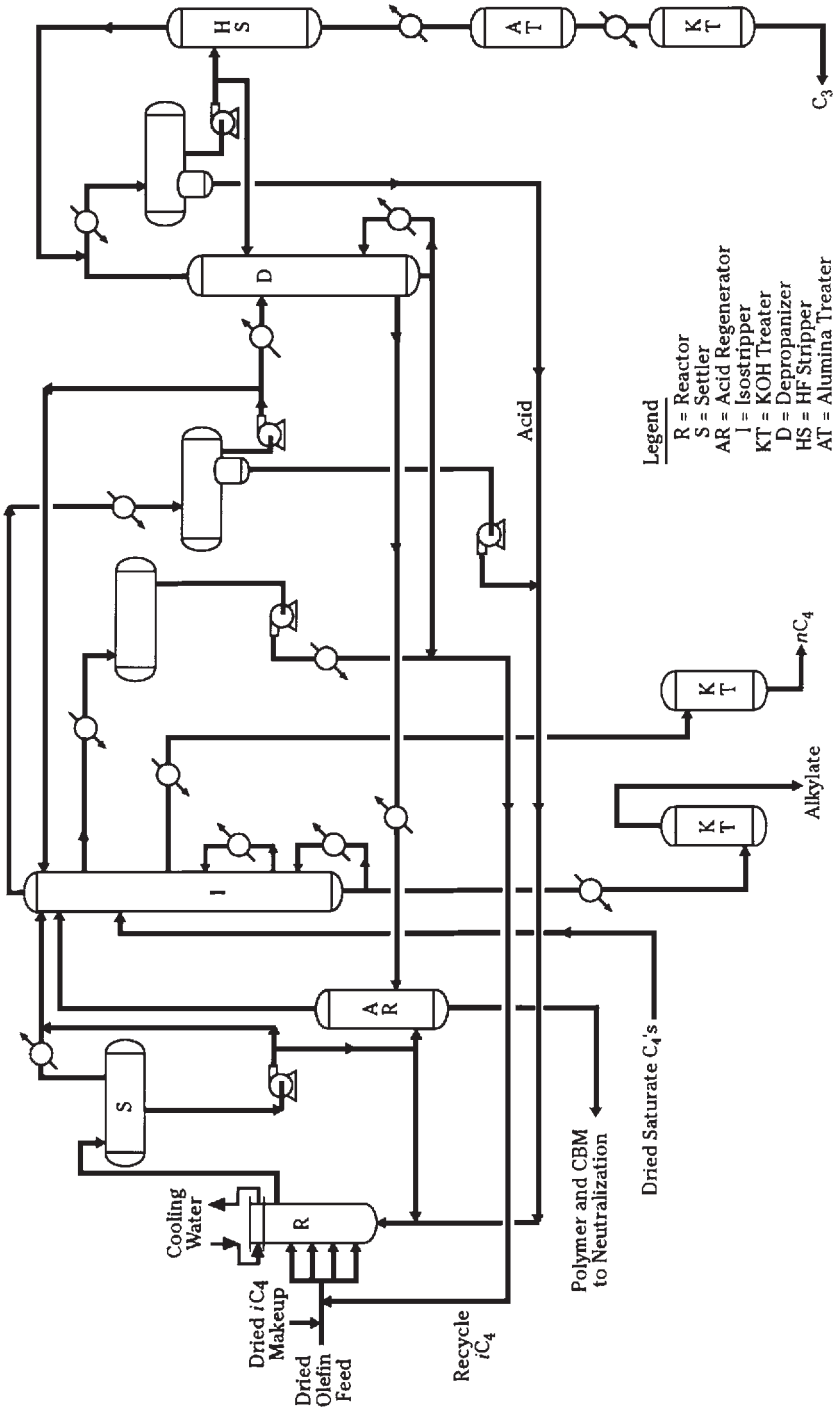

FIGURE 1.4.4 UOP C_3-C_4 HF Alkylation process.

Downloaded from Digital Engineering Library @ McGraw-Hill (www.digitalengineeringlibrary.com)
Copyright © 2004 The McGraw-Hill Companies. All rights reserved.
Any use is subject to the Terms of Use as given at the website.

UOP HF ALKYLATION TECHNOLOGY

sumption. An acid regenerator column is also provided for start-ups after turnarounds or in the event of a unit upset or feed contamination.

When the propane or normal butane from the HF unit is to be used as liquefied petroleum gas (LPG), defluorination is recommended because of the possible breakdown of combined fluorides during combustion and the resultant potential corrosion of burners. Defluorination is also required when the butane is to be directed to an isomerization unit. After defluorination, the propane and butane products are treated with potassium hydroxide (KOH) to remove any free HF acid that might break through in the event of unit misoperation.

The alkylation unit is built almost entirely of carbon steel although some Monel is used for most moving parts and in a few other limited locations. Auxiliary neutralizing and scrubbing equipment is included in the plant design to ensure that all materials leaving the unit during both normal and emergency operations are acid-free.

ENGINEERING DESIGN

The reactor and distillation systems that UOP uses have evolved through many years of pilot-plant evaluation, engineering development, and commercial operation. The overall plant design has progressed through a number of variations, resulting in the present concepts in alkylation technology.

Reactor Section

In the design of the reactor, the following factors require particular attention:

- Removal of heat of reaction
- Generation of acid surface: mixing and acid/hydrocarbon ratio
- Acid composition
- Introduction of olefin feed

The proper control of these factors enhances the quality and yield of the alkylate product.

Selecting a particular reaction system configuration requires careful consideration of the refiner's production objectives and economics. The UOP reaction system optimizes processing conditions by the introduction of olefin feed through special distributors to provide the desired contact with the continuous-acid phase. Undesirable reactions are minimized by the continuous removal of the heat of reaction in the reaction zone itself. The removal of heat in the reaction zone is advantageous because peak reaction temperatures are reduced and effective use is made of the available cooling-water supply.

Acid Regeneration Section

The internal acid regeneration technique has virtually eliminated the need for an acid regenerator and, as a result, acid consumption has been greatly reduced. The acid regenerator has been retained in the UOP design only for start-ups or during periods when the feed has abnormally high levels of contaminants, such as sulfur and water. For most units, during normal operation, the acid regenerator is not in service.

When the acid regenerator is in service, a drag stream off the acid circulation line at the settler is charged to the acid regenerator, which is refluxed on the top tray with isobutane.

Downloaded from Digital Engineering Library @ McGraw-Hill (www.digitalengineeringlibrary.com)
Copyright © 2004 The McGraw-Hill Companies. All rights reserved.
Any use is subject to the Terms of Use as given at the website.

UOP HF ALKYLATION TECHNOLOGY

The source of heat to the bottom of the regenerator for a C_3-C_4 HF Alkylation unit is superheated isobutane from the depropanizer sidecut vapors. For a C_4 HF Alkylation unit, the stripping medium to the acid regenerator is sidecut vapors from the HF stripper bottoms. The regenerated HF acid is combined with the overhead vapor from the isostripper and sent to the cooler.

Neutralization Section

UOP has designed the neutralization section to minimize the amount of additional effluents such as offensive materials and undesirable by-products. Releasing acid-containing vapors to the regular relief-gas system is impractical because of corrosion and odor problems as well as other environmental and safety concerns. The system is composed of the relief-gas scrubber, KOH mix tank, circulating pumps, and a KOH regeneration tank.

All acid vents and relief valves are piped to this relief section. Gases pass up through the scrubber and are contacted by a circulating KOH solution to neutralize the HF acid. After the neutralization of the acid, the gases can be safely released into the refinery flare system.

The KOH is regenerated on a periodic basis in the KOH regeneration tank by using lime to form calcium fluoride (CaF_2) and KOH. The CaF_2 settles to the bottom of the tank and is directed to the neutralizing basin, where acidic water from acid sewers and small amounts of acid from the process drains are treated. Lime is used to convert any fluorides into calcium fluoride before any waste effluent is released into the refinery sewer system.

Distillation System

The distillation and recovery sections of HF Alkylation units have also seen considerable evolution. The modern isostripper recovers relatively high-purity isobutane as a sidecut that is recycled to the reactor. This recycle is virtually acid-free, thereby minimizing undesirable side reactions with the olefin feed prior to entry into the reactor. A small rectification section on top of the modern isostripper provides for more efficient propane rejection.

Although a single high-pressure tower can perform the combined functions of isostripper and depropanizer, UOP's current design incorporates two towers (isostripper and depropanizer) for the following reasons:

- Each tower may be operated at its optimum pressure. Specifically, in the isostripper for this two-tower design, the relative volatilities between products increase, and the number of trays required for a given operation are reduced in addition to improving separation between cuts.
- This system has considerably greater flexibility. It is easily convertible to a butylene-only operation because the depropanizer may be used as a feed splitter to separate C_3s and C_4s. The two-tower design permits the use of side feeds to the isostripper column, should it be necessary to charge makeup isobutane of low purity. This design also permits the production of lower-vapor-pressure alkylate and a high-purity sidecut nC_4 for isomerizing or blending and the ability to make a clean split of side products.
- The two-tower design permits considerable expanded capacity at low incremental cost by the addition of feed preheat and side reboiling.
- Alkylate octane increases with decreasing reaction temperature. During cooler weather, the unit may be operated at lower isobutane/olefin ratios for a given product octane, because the ratio is fixed by the product requirement and not by the fractionation requirements. The commensurate reduction in utilities lowers operating costs.

Downloaded from Digital Engineering Library @ McGraw-Hill (www.digitalengineeringlibrary.com)
Copyright © 2004 The McGraw-Hill Companies. All rights reserved.
Any use is subject to the Terms of Use as given at the website.

UOP HF ALKYLATION TECHNOLOGY

- Because of the low isostripper pressure in a two-tower system, this arrangement permits the use of steam for reboiling the isostripper column instead of a direct-fired heater, which is necessary in a single-tower system. In most cases, a stab-in reboiler system is suitable even for withdrawing a sidecut. Using a steam reboiler can be a considerable advantage when refinery utility balances so indicate, and it also represents considerable investment-cost savings.
- The two-tower system has proven its performance in a large number of operating units, and its flexibility has been proven through numerous revamps for increased capacity on existing units.
- The two-tower system also requires less overhead condenser surface, which lowers the investment required for heat exchange.
- Clean isobutane is available for flush, whereas only alkylate flush is available in the single-column operation. This clean-isobutane stream is also available to be taken to storage and is a time saver during start-ups and shutdowns.
- Although fewer pieces of equipment are required with the single tower, the large number of trays and the high-pressure design necessitate the use of more tons of material and result in a somewhat higher overall cost than does the two-tower system.
- The regenerator column contains no expensive overhead system, and the internal HF regeneration technique results in improved acid consumption.
- Because a high-temperature differential can be taken on most cooling water, cooling-water requirements for the two-tower system are only about two-thirds those of the single-tower system.

COMMERCIAL INFORMATION

Typical commercial yields and product properties for charging various olefin feedstocks to an HF Alkylation unit are shown in Tables 1.4.2 and 1.4.3. Table 1.4.4 contains the detailed breakdown of the investment and production costs for a pumped, settled acid-alkylation unit based on a typical C_4 olefin feedstock.

ENVIRONMENTAL CONSIDERATIONS

The purpose of operating an HF Alkylation unit is to obtain a high-octane motor fuel blending component by reacting isobutane with olefins in the presence of HF acid. In the UOP HF Alkylation process, engineering and design standards have been developed and improved over many years to obtain a process that operates efficiently and economically. This continual process development constitutes the major reason for the excellent product qualities, low acid-catalyst consumption, and minimal extraneous by-products obtained by the UOP HF Alkylation process.

TABLE 1.4.2 HF Alkylation Yields

Olefin feedstocks	Required vol. iC_4/vol. olefin	Vol. alkylate produced/vol. olefin
C_3-C_4	1.28	1.78
Mixed C_4	1.15	1.77

Downloaded from Digital Engineering Library @ McGraw-Hill (www.digitalengineeringlibrary.com)
Copyright © 2004 The McGraw-Hill Companies. All rights reserved.
Any use is subject to the Terms of Use as given at the website.

UOP HF ALKYLATION TECHNOLOGY

TABLE 1.4.3 HF Alkylation Product Properties

Property	Propylene-butylene feed	Butylene feed
Specific gravity	0.693	0.697
Distillation temperature, °C (°F):		
IBP	41 (105)	41 (105)
10%	71 (160)	76 (169)
30%	93 (200)	100 (212)
50%	99 (210)	104 (220)
70%	104 (219)	107 (225)
90%	122 (250)	125 (255)
EP	192 (378)	196 (385)
Octanes:		
RONC	93.3	95.5
MONC	91.7	93.5

Note: IBP = initial boiling point; EP = endpoint; RONC = research octane number, clear; MONC = motor octane number, clear.

TABLE 1.4.4 Investment and Production Cost Summary*

Operating cost	$/stream day	$/MT alkylate	$/bbl alkylate
Labor	1,587	0.016	0.176
Utilities	6,609	0.066	0.734
Chemical consumption, laboratory allowance, maintenance, taxes, and insurance	5,639	0.056	0.627
Total direct operating costs	13,835	0.138	1.537
Investment, estimated erected cost (EEC), first quarter 2002			$27,800,000

*Basis: 348,120 MTA (9000 BPSD) C_5 + alkylate.
Note: MT = metric tons; MTA = metric tons per annum; BPSD = barrels per stream-day.

As in every process, certain minor process inefficiencies, times of misoperation, and periods of unit upsets occur. During these times, certain undesirable materials can be discharged from the unit. These materials can be pollutants if steps are not taken in the process effluent management and product-treating areas to render these by-product materials harmless.

In a properly operated HF Alkylation unit, the amount of additional effluent, such as offensive materials or undesirable by-products is minimal, and with proper care, these small streams can be managed safely and adequately. The potentially offensive nature of the streams produced in this process as well as the inherent hazards of HF acid has resulted in the development of effluent management and safety procedures that are unique to the UOP HF Alkylation process. The following sections briefly describe these procedures and how these streams are safely handled to prevent environmental contamination. The refiner must evaluate and comply with any pertinent effluent management regulations. An overall view of the effluent management concept is depicted in Fig. 1.4.5.

Effluent Neutralization

In the Alkylation unit's effluent-treating systems, any neutralized HF acid must eventually leave the system as an alkali metal fluoride. Because of its extremely low solubility in

Downloaded from Digital Engineering Library @ McGraw-Hill (www.digitalengineeringlibrary.com)
Copyright © 2004 The McGraw-Hill Companies. All rights reserved.
Any use is subject to the Terms of Use as given at the website.

UOP HF ALKYLATION TECHNOLOGY

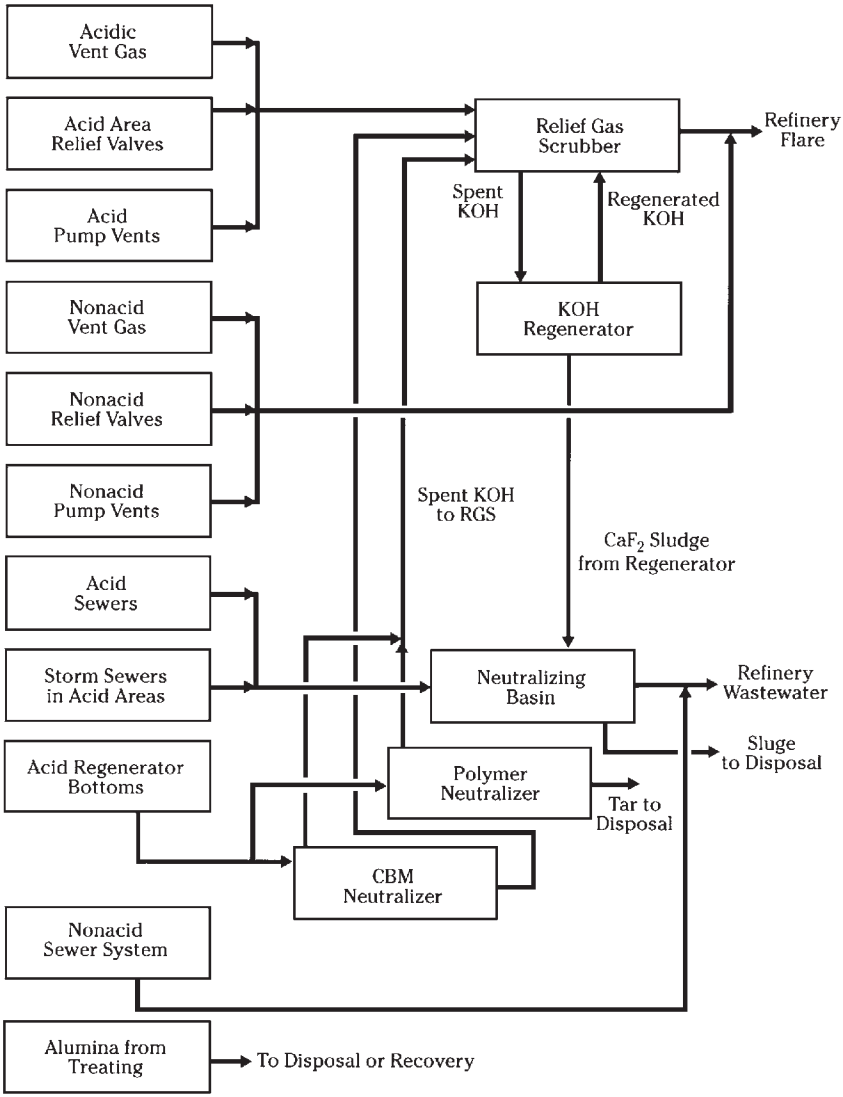

FIGURE 1.4.5 UOP HF Alkylation process effluent management.

water, CaF_2 is the desired end product. The effluent containing HF acid can be treated with a lime [CaO-$Ca(OH)_2$] solution or slurry, or it can be neutralized indirectly in a KOH system to produce the desired CaF_2 product.

The KOH neutralization system currently used in a UOP-designed unit involves a two-stage process. As HF acid is neutralized by aqueous KOH, soluble potassium fluoride (KF) is produced, and the KOH is gradually depleted. Periodically, some of the KF-containing neutralizing solution is withdrawn to the KOH regenerator. In this vessel, KF reacts with a lime slurry to produce insoluble CaF_2 and thereby regenerates KF to KOH.

Downloaded from Digital Engineering Library @ McGraw-Hill (www.digitalengineeringlibrary.com)
Copyright © 2004 The McGraw-Hill Companies. All rights reserved.
Any use is subject to the Terms of Use as given at the website.

UOP HF ALKYLATION TECHNOLOGY

The regenerated KOH is then returned to the system, and the solid CaF_2 is routed to the neutralizing basin.

Effluent Gases. The HF Alkylation unit uses two separate gas vent lines to maintain the separation of acidic gases from nonacidic gases until the acidic gases can be scrubbed free of acid.

Acidic Hydrocarbon Gases. Acidic hydrocarbon gases originate from sections of the unit where HF acid is present. These gases may evolve during a unit upset, during a shutdown, or during a maintenance period in which these acidic gases are partially or totally removed from the process vessels or equipment. The gases from the acid vents and from the acid pressure relief valves are piped to a separate closed relief system for the neutralization of the acid contained in the gas. The acid-free gases are then routed from this acid-scrubbing section to the refinery nonacid flare system, where they are disposed of properly by burning.

The acidic gases are scrubbed in the acid neutralization and caustic regeneration system, as shown Fig. 1.4.6. This system consists of the relief-gas scrubber, KOH mix tank, liquid-knockout drum, neutralization drum, circulating pumps, and a KOH regeneration tank.

Acidic gases, which were either vented or released, first flow to a liquid-knockout drum to remove any entrained liquid. The liquid from this drum is pumped to the neutralization drum. The acidic gases from the liquid-knockout drum then pass from the drum to the scrubbing section of the relief-gas scrubber, where countercurrent contact with a KOH solution removes the HF acid. After neutralization of the HF acid, the nonacidic gases are released into the refinery flare system.

The KOH used for the acidic-gas neutralization is recirculated by the circulation pumps. The KOH solution is pumped to the top of the scrubber and flows downward to contact the rising acidic gas stream and then overflows a liquid-seal pan to the reservoir section of the scrubber. In addition, a slipstream of the circulating KOH contacts the acidic gas just prior to its entry to the scrubber. The circulating KOH removes HF through the following reaction:

$$HF + KOH \rightarrow KF + H_2O \tag{1.4.19}$$

Maintaining the circulating caustic pH and the correct percentage of KOH and KF requires a system to regenerate the caustic. This regeneration of the KOH solution is performed on a batch basis in a vessel separate from the relief-gas scrubber. In this regeneration tank, lime and the spent KOH solution are thoroughly mixed. The regenerated caustic solution is pumped back to the scrubber. The CaF_2 and any unreacted lime are permitted to settle out and are then directed to the neutralization pit. The regeneration of the spent KOH solution follows the Berthollet rule, by which the insolubility of CaF_2 in water permits the complete regeneration of the potassium hydroxide according to the following equation:

$$2KF + Ca(OH)_2 \rightarrow 2KOH + CaF_2 \tag{1.4.20}$$

Nonacidic Hydrocarbon Gases. Nonacidic gases originate from sections of the unit in which HF acid is not present. These nonacidic gases from process vents and relief valves are discharged into the refinery nonacid flare system, where they are disposed of by burning. The material that is vented or released to the flare is mainly hydrocarbon in nature. Possibly, small quantities of inert gases are also included.

Obnoxious Fumes and Odors. The only area from which these potentially objectionable fumes could originate is the unit's neutralizing basins. To prevent the discharge of these odorous gases to the surroundings, the neutralizing basins are tightly covered and equipped with a gas scrubber to remove any offensive odors. The

Downloaded from Digital Engineering Library @ McGraw-Hill (www.digitalengineeringlibrary.com)
Copyright © 2004 The McGraw-Hill Companies. All rights reserved.
Any use is subject to the Terms of Use as given at the website.

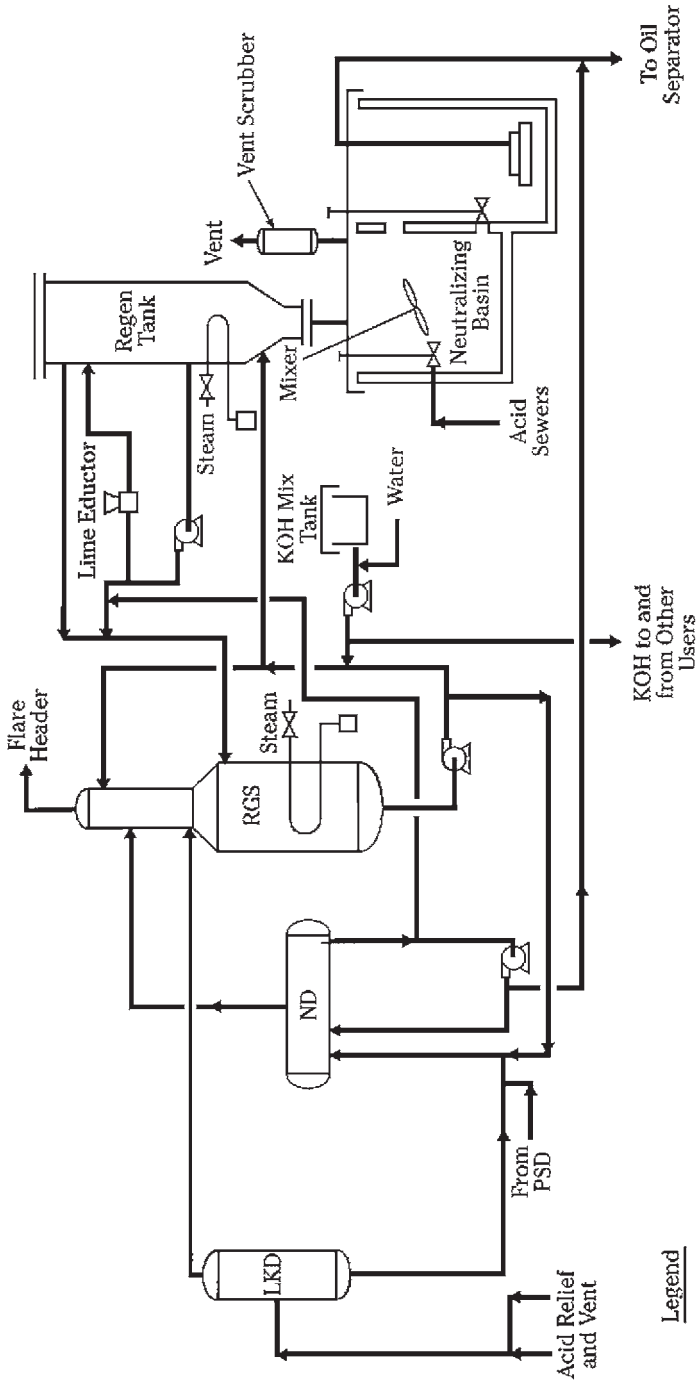

FIGURE 1.4.6 Acid neutralization and caustic regeneration section.

Downloaded from Digital Engineering Library @ McGraw-Hill (www.digitalengineeringlibrary.com)
Copyright © 2004 The McGraw-Hill Companies. All rights reserved.
Any use is subject to the Terms of Use as given at the website.

UOP HF ALKYLATION TECHNOLOGY

gas scrubber uses either water or activated charcoal as the scrubbing agent. However, in the aforementioned neutralizing system, odors from the basin are essentially nonexistent because the main source of these odors (acid regenerator bottoms) is handled in separate closed vessels.

Liquid Effluents. The HF Alkylation unit is equipped with two separate sewer systems to ensure the segregation of the nonacid from the possibly acid-containing water streams.

Acidic Waters. Any potential HF containing water streams (rainwater runoff in the acid area and wash water), heavy hydrocarbons, and possibly spent neutralizing media are directed through the acid sewer system to the neutralizing basins for the neutralization of any acidic material. In the basins, lime is used to convert the incoming soluble fluorides to CaF_2.

The neutralizing basins consist of two separate chambers (Fig. 1.4.7). One chamber is filled while the other drains. In this parallel neutralizing basin design, one basin has the inlet line open and the outlet line closed. As only a few surface drains are directed to the neutralizing basins, inlet flow normally is small, or nonexistent, except when acid equipment is being drained. The operator regularly checks the pH and, if necessary, mixes the lime slurry in the bottom of the basin.

After the first basin is full, the inlet line is closed, and the inlet to the second basin is opened; then lime is added to the second basin. The first basin is mixed and checked with pH paper after a period of agitation; if it is acidic, more lime is added from lime storage until the basin is again basic. After settling, the effluent from the first basin is drained.

Nonacidic Waters. The nonacid sewers are directed to the refinery water disposal system or to the API separators.

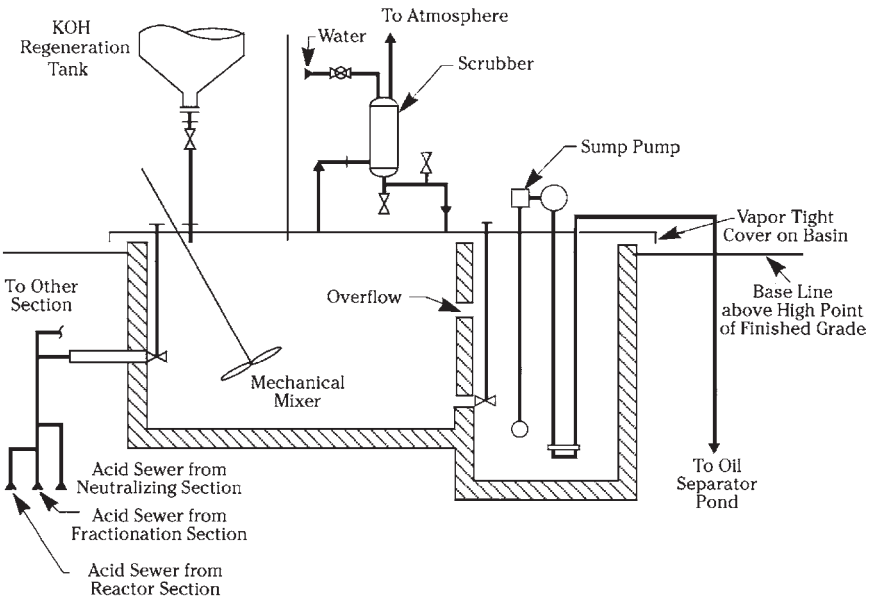

FIGURE 1.4.7 Neutralizing basin.

Downloaded from Digital Engineering Library @ McGraw-Hill (www.digitalengineeringlibrary.com)
Copyright © 2004 The McGraw-Hill Companies. All rights reserved.
Any use is subject to the Terms of Use as given at the website.

UOP HF ALKYLATION TECHNOLOGY

Liquid Process Effluents (Hydrocarbon and Acid). Hydrocarbon and acid effluents originate from some minor undesirable process side reactions and from any feed contaminants that are introduced to the unit. Undesirable by-products formed in this manner are ultimately rejected from the Alkylation unit in the acid regeneration column as a bottoms stream.

The regeneration-column bottoms stream consists mainly of two types of mixtures. One is an acid-water phase that is produced when water enters the unit with the feed streams. The other mixture is a small amount of polymeric material that is formed during certain undesirable process side reactions. Figure 1.4.8 represents the HF acid regeneration circuit.

The first step in the disposal of these materials is to direct the regenerator bottoms to the polymer surge drum, where the two mixtures separate. The acid-water mixture forms an azeotrope, or constant boiling mixture (CBM), which is directed to the neutralizing drum (Fig. 1.4.8) for neutralization of the HF acid. The acid in this CBM ultimately ends up as insoluble CaF_2 (as described previously). The polymer that remains in the polymer surge drum is then transferred to the tar neutralizer, where the HF acid is removed. The polymer has excellent fuel oil properties and can then be disposed of by burning as long as applicable regulations allow such. However, by the mid-1980s, technology and special operating techniques such as internal acid regeneration had virtually eliminated this liquid-effluent stream for many units.

Solid Effluents

Neutralization Basin Solids. The neutralization basin solids consist largely of CaF_2 and unreacted lime. As indicated previously, all HF-containing liquids that are directed to the neutralizing basins ultimately have any contained soluble fluorides converted to insoluble CaF_2. The disposal of this solid material is done on a batch basis. A vacuum truck is normally used to remove the fluoride-lime sludge from the

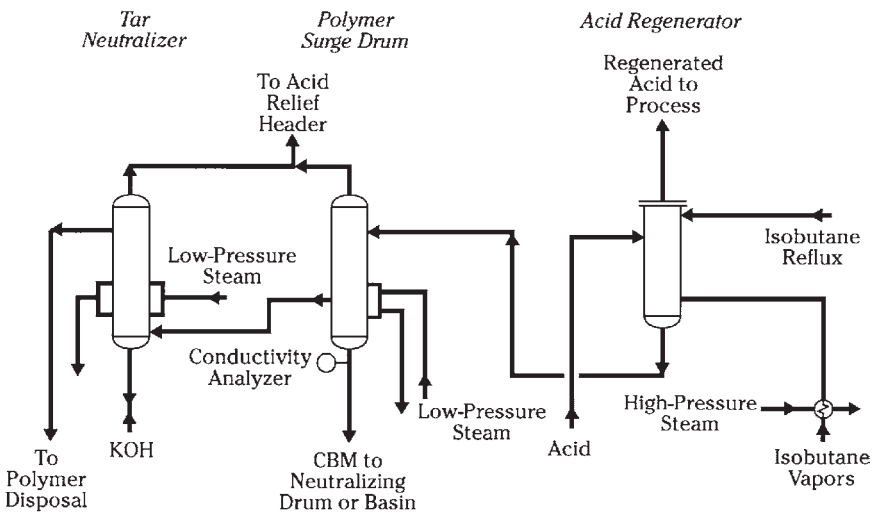

CBM = Constant Boiling Mixture
KOH = Potassium Hydroxide

FIGURE 1.4.8 HF acid regeneration circuit.

Downloaded from Digital Engineering Library @ McGraw-Hill (www.digitalengineeringlibrary.com)
Copyright © 2004 The McGraw-Hill Companies. All rights reserved.
Any use is subject to the Terms of Use as given at the website.

UOP HF ALKYLATION TECHNOLOGY

pit. This sludge has traditionally been disposed of in a landfill after analysis to ensure appropriate properties are met.

Another potential route for sludge disposal is to direct it to a steel manufacturing company, where the CaF_2 can be used as a neutral flux to lower the slag melting temperature and to improve slag fluidity. The CaF_2 may possibly be routed back to an HF acid manufacturer, as the basic step in the HF-manufacturing process is the reaction of sulfuric acid with fluorspar (CaF_2) to produce hydrogen fluoride and calcium sulfate.

Product-Treating Solids. The product-treating solids originate when LPG products are defluorinated over activated alumina. Over time, the alumina loses the ability to defluorinate the LPG product streams. At this time, the alumina is considered spent, and it is then replaced with fresh alumina. Spent alumina must be disposed of in accordance with applicable regulations or sent to the alumina vendor for recovery.

Miscellaneous Solids. Porous material such as wiping cloths, wood, pipe coverings, and packings that are suspected of coming into contact with HF acid are placed in specially provided disposal cans for removal and are periodically burned. These solids may originate during normal unit operation or during a maintenance period. Wood staging and other use of wood in the area are kept to a minimum. Metal staging must be neutralized before being removed from the acid area.

MITIGATING HF RELEASES—THE CHEVRONTEXACO AND UOP ALKAD PROCESS

Growing environmental and public safety concerns since the mid-1980s have heightened awareness of hazards associated with many industrial chemicals, including HF acid. Refiners responded to these concerns with the installation of mitigation systems designed to minimize the consequences of accidental releases. ChevronTexaco and UOP developed the Alkad* technology[1] to assist in reducing the potential hazards of HF acid and to work in conjunction with other mitigation technology.

HF Acid Concerns and Mitigation

Although HF alkylation was clearly the market leader in motor fuel alkylation by the mid-1980s, growing concerns about public safety and the environment caused HF producers and users to reassess how HF acid was handled and how to respond to accidental releases. In 1986, Amoco and the Lawrence Livermore National Laboratory conducted atmospheric HF release tests at the Department of Energy Liquefied Gaseous Fuels Facility in Nevada. These tests revealed that HF acid could form a cold, dense aerosol cloud that did not rapidly dissipate and remained denser than air. In 1988, another set of tests, the Hawk tests, was conducted to determine the effect of water sprays on an HF aerosol cloud. These tests indicated that a water/HF ratio of 40/1 by volume would reduce the airborne HF acid by about 90 percent.[2] As a result of these investigations, many refiners have installed, or are planning to install, water spray systems in their HF alkylation units to respond to accidental releases.

Other mitigation technology installed by refiners includes acid inventory reduction, HF detection systems, isolation valves, and rapid acid transfer systems. These mitigation sys-

*Trademark and/or service mark of UOP.

Downloaded from Digital Engineering Library @ McGraw-Hill (www.digitalengineeringlibrary.com)
Copyright © 2004 The McGraw-Hill Companies. All rights reserved.
Any use is subject to the Terms of Use as given at the website.

UOP HF ALKYLATION TECHNOLOGY

tems can be described as external, defensive response systems because they depend on an external reaction (for example, spraying water) to a detected leak.

ChevronTexaco and UOP chose to develop a system that would respond prior to leak detection. Such a system could be described as an internal, passive response system because it is immediately effective, should a leak occur. In 1991, ChevronTexaco and UOP began to work together to develop an additive system to reduce the risk associated with the HF alkylation process. The objective was to develop an additive that would immediately suppress the HF aerosol in the event of a leak but would not otherwise interfere with the normal performance of the HF unit.

Aerosol Reduction

ChevronTexaco screened a large number of additive materials for aerosol reduction capability in its R&D facilities in Port Arthur, Texas. The most promising materials that significantly reduced aerosol and maintained adequate alkylation activity were tested in a large-scale release chamber in Oklahoma.[3]

Release tests with additive demonstrated the potential reduction of airborne HF acid at various additive concentrations. This reduction was determined on the basis of the weight of material collected relative to the weight of material released. The aerosol reduction achieved is described in Fig. 1.4.9. As shown, reductions of airborne HF acid of up to 80 percent may be possible, depending on the additive concentration level at which a refiner is able to operate. Employing the Alkad technology in conjunction with water sprays may result in more than 95 percent reduction of the airborne HF acid.

Process Development

ChevronTexaco and UOP conducted a trial with the most interesting additive material in the older of two alkylation units at the former Texaco refinery in El Dorado, Kansas, in 1992. During the trial, the alkylation unit operated well, with no changes as a result of the presence of additive in the acid. Following this successful trial, UOP designed facilities to recover the acid-additive complex from the acid regenerator bottoms stream and recycle this material to the reactor section.

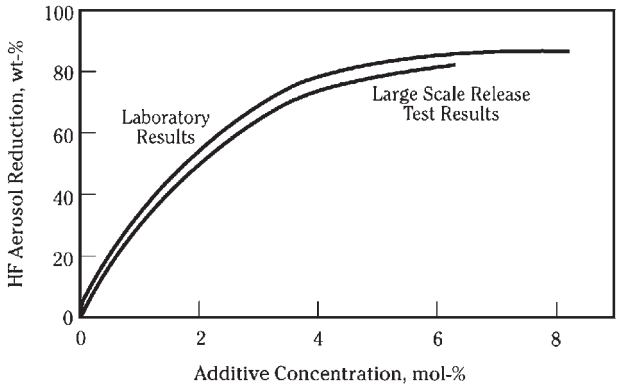

FIGURE 1.4.9 Aerosol reduction results.

Downloaded from Digital Engineering Library @ McGraw-Hill (www.digitalengineeringlibrary.com)
Copyright © 2004 The McGraw-Hill Companies. All rights reserved.
Any use is subject to the Terms of Use as given at the website.

UOP HF ALKYLATION TECHNOLOGY

The recovery process has been further optimized following the operations from 1994 through 1998. The addition of the recovery process to an HF alkylation unit or design generally requires a new column, separator, and associated equipment. The HF acid regenerator column is still used for the removal of water and light polymer from the process. A simplified flow scheme is shown in Fig. 1.4.10.

A slipstream of circulating acid is sent to the additive stripper column. The additive stripper sends acid, water, and light acid-soluble oils overhead and on to the acid regenerator. Heavy acid-soluble oils and the concentrated HF-additive complex are sent to the additive stripper bottoms separator. From this separator the polymer is sent to neutralization, and the HF-additive complex is recycled to the reactor section. The acid regenerator removes water and light acid-soluble oils from the additive stripper overhead stream. The water is in the form of a constant boiling mixture of water and HF.

Commercial Experience

After construction of the modular additive recovery section was completed, Texaco began operating the Alkad technology in September 1994. The immediate observation when the additive was introduced was an increase in product octane and a reduction in alkylate endpoint. Research octane was 1.5 or more numbers higher than the baseline operation (Fig. 1.4.11). A comparison of operations with and without additive is shown in Table 1.4.5, which breaks down two alkylate samples from equivalent operating conditions. An analysis of the alkylate components has shown that the increased octane is partially due to a significantly higher octane in the C_9+ material. Increased paraffin branching in the C_7 and lighter fraction is also a contributor to the octane boost. As shown in Fig. 1.4.12, initial data indicated that the alkylate 90 percent distillation point had decreased 14 to 19°C (25 to 35°F) and the endpoint had dropped 17 to 22°C (30 to 40°F). As gasoline regulations change, this distillation improvement may allow refiners to blend in more material from other sources and still meet regulatory requirements in their areas and effectively increase gasoline pool volume. Texaco installed this additive-recovery system for approximately $7 million U.S.

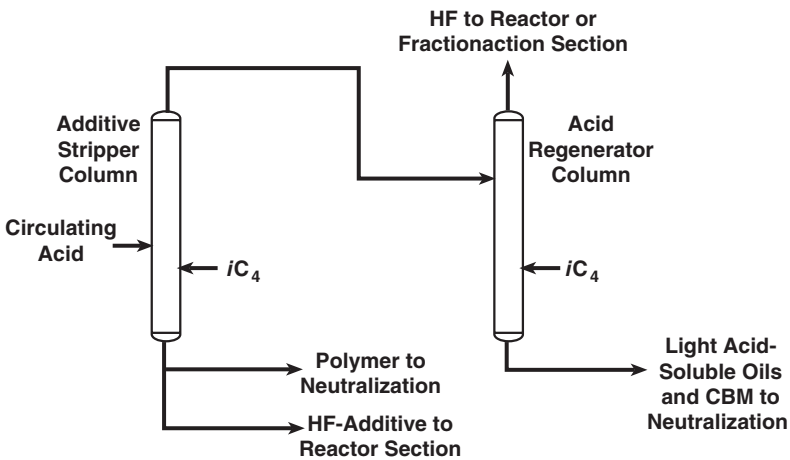

FIGURE 1.4.10 UOP HF Additive Recovery Process.

Downloaded from Digital Engineering Library @ McGraw-Hill (www.digitalengineeringlibrary.com)
Copyright © 2004 The McGraw-Hill Companies. All rights reserved.
Any use is subject to the Terms of Use as given at the website.

UOP HF ALKYLATION TECHNOLOGY

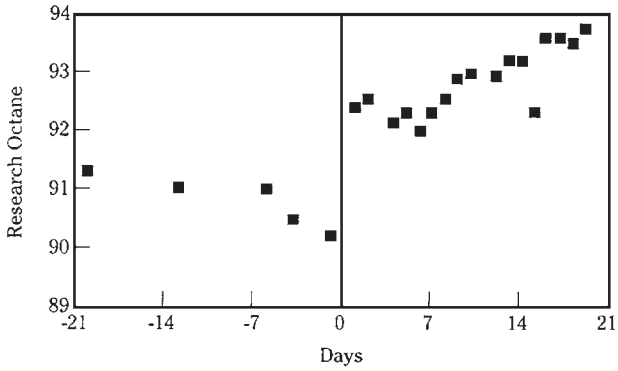

FIGURE 1.4.11 Alkylate octane.

TABLE 1.4.5 Alkylate Composition Comparison

	No additive	With additive
Alkylate RONC (measured)	90.8	92.2
Composition, LV %:		
C_6	2.84	3.58
C_7	14.15	19.06
C_8	45.24	44.35
C_9+	17.49	16.28
Calculated C_9 + RONC	81.6	89.5
Dimethylbutane/methylpentane	1.7	2.5
Dimethylpentane/methylhexane	51.0	77.1

Note: LV % = liquid volume percent.

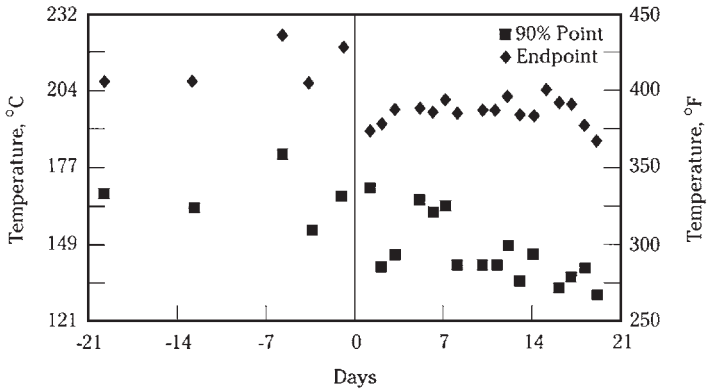

FIGURE 1.4.12 Alkylate distillation.

Downloaded from Digital Engineering Library @ McGraw-Hill (www.digitalengineeringlibrary.com)
Copyright © 2004 The McGraw-Hill Companies. All rights reserved.
Any use is subject to the Terms of Use as given at the website.

UOP HF ALKYLATION TECHNOLOGY

The Alkad process significantly reduces the hazards associated with an accidental release of HF acid and minimizes the refiner's further investment in motor fuel alkylation mitigation technology.

REFERENCES

1. J. C. Sheckler and H. U. Hammershaimb, "*UOP Alkylation Technology into the 21st Century*," presented at the 1995 UOP Refining Technology Conferences.
2. K. W. Schatz and R. P. Koopman, "*Effectiveness of Water Spray Mitigation Systems for Accidental Releases of Hydrogen Fluoride*," summary report and volumes I–X, NTIS, Springfield, Va., 1989.
3. K. R. Comey, III, L. K. Gilmer, G. P. Partridge, and D. W. Johnson, "*Aerosol Reduction from Episodic Releases of Anhydrous HF Acid by Modifying the Acid Catalyst with Liquid Onium Poly* (*Hydrogen Fluorides*)," AIChE 1993 Summer National Meeting, Aug. 16, 1993.

Downloaded from Digital Engineering Library @ McGraw-Hill (www.digitalengineeringlibrary.com)
Copyright © 2004 The McGraw-Hill Companies. All rights reserved.
Any use is subject to the Terms of Use as given at the website.

Downloaded from Digital Engineering Library @ McGraw-Hill (www.digitalengineeringlibrary.com)
Copyright © 2004 The McGraw-Hill Companies. All rights reserved.
Any use is subject to the Terms of Use as given at the website.

Source: HANDBOOK OF PETROLEUM REFINING PROCESSES

CHAPTER 1.5
LINEAR ALKYLBENZENE (LAB) MANUFACTURE

Andrea Bozzano
UOP
Des Plaines, Illinois

INTRODUCTION

The detergent industry originated in the late 1940s with the advent of sodium alkylbenzene sulfonates, which had detergency characteristics far superior to those of natural soaps. Natural soaps are sodium salts of fatty acids obtained by the alkaline saponification of naturally occurring triglycerides from either vegetal or animal sources. The early alkylbenzene sulfonates (ABSs) were essentially sodium dodecylbenzene sulfonates (DDBSs), also known as branched alkylbenzene sulfonates (BABSs) obtained by the Friedel-Crafts alkylation of benzene with propylene tetramer, a mixture of branched C_{12} olefins. Dodecylbenzenes (DDBs) are then sulfonated with oleum or sulfur trioxide (SO_3) and neutralized with sodium hydroxide or soda ash.

Because of their lower cost and high effectiveness in a wide range of detergent formulations, DDBSs rapidly displaced natural soaps in household laundry and dishwashing applications. However, although excellent from a performance viewpoint, BABS exhibited slow rates of biodegradation in the environment and, in the early 1960s, started to be replaced by linear alkylbenzene sulfonate (LAS or LABS). The linear alkyl chains found in LAS biodegrade at rates that are comparable to those observed in the biodegradation of natural soaps and other natural and semisynthetic detergent products.

The use of DDBS has never been formally banned in the United States, but by the late 1960s, its use had been largely phased out in the United States, Japan, and several European countries. By the late 1970s, the use of LAS had become more generalized, and new facilities were added in developing countries around the world. Currently, LAS accounts for virtually the entire worldwide production of alkylbenzene sulfonates. The demand for linear alkylbenzene increased from about 1.0 million metric tons per year (MTA) in 1980 to about 1.7 million in 1990. The demand for LAB is approximately 2.5 million MTA and is growing at an annual rate of 3.5 percent as of 2002. Worldwide LAB production capacity is approximately 2.8 million MTA as of 2002.

Downloaded from Digital Engineering Library @ McGraw-Hill (www.digitalengineeringlibrary.com)
Copyright © 2004 The McGraw-Hill Companies. All rights reserved.
Any use is subject to the Terms of Use as given at the website.

LINEAR ALKYLBENZENE (LAB) MANUFACTURE

TECHNOLOGY BACKGROUND

Various routes were developed and used in the production of LAB. The first hurdle to be overcome was the recovery, typically from kerosene or gas oil fractions, of linear paraffins (*n*-paraffins) in the C_{10} to C_{14} range. Initial recovery attempts were based on the use of urea adducts, which were soon replaced by adsorptive separation and recovery techniques, in either the vapor or the liquid phase. These techniques used a variety of adsorbents and desorbents. Adsorptive separation techniques based on the molecular sieve action of 5-Å zeolites have dominated this industry since the mid-1960s. Typical commercial process technologies for this separation include the UOP Molex* process in the liquid phase with a hydrocarbon desorbent that makes use of UOP's Sorbex* simulated moving-bed technology; the UOP IsoSiv* process (formerly Union Carbide's), which operates in the vapor phase also with a hydrocarbon desorbent; Exxon's Ensorb process, which is also in the vapor phase but has an ammonia desorbent; or a similar technology developed in the former German Democratic Republic (East Germany) and known as the GDR Parex process, which also operates in the vapor phase with ammonia desorbent. The GDR Parex process is not to be confused with UOP's Parex process for the selective recovery of high-purity *p*-xylene from aromatic streams using the Sorbex simulated moving-bed technology.

Once the linear paraffins have been recovered at sufficient purity, typically in excess of about 98 percent, they have to be alkylated with benzene to produce LAB. To date, attempts to alkylate *n*-paraffins with benzene directly have failed, thus necessitating the activation of the *n*-paraffins to a more reactive intermediate before the alkylation with benzene can take place.

The following routes for the production of LAB emerged during the 1960s:

- Chlorination of *n*-paraffins to form primarily monochloroparaffins. Benzene is then alkylated with monochloroparaffins using an aluminum chloride ($AlCl_3$) catalyst. An example of this route was developed and commercialized by ARCO Technology Inc.[1]
- Chlorination of *n*-paraffins followed by dehydrochlorination and alkylation of the resulting olefins with benzene typically using hydrofluoric (HF) acid as catalyst. Shell's CDC process (for *c*hlorination/*d*ehydro*c*hlorination) is an example of such a process. This type of technology was still used commercially until the mid-1980s by, among others, Hüls AG in Germany.
- Alkylation of linear olefins with benzene also using an HF catalyst. The olefins are usually linear *alpha*-olefins (LAOs) from wax cracking (now discontinued), *alpha*-olefins from ethylene oligomerization, or linear internal olefins (LIOs) from olefin disproportionation. Various companies, such as BP, Chevron (formerly Gulf), and Shell, offer technologies for the oligomerization of ethylene to LAO; Shell also produces linear internal olefins by disproportionation in its Shell Higher Olefins process (SHOP).
- Dehydrogenation of linear paraffins to a fairly dilute mixture of LIO in unconverted *n*-paraffins, followed by the alkylation of the olefins with benzene also using HF acid catalyst but without the separation and concentration of the LIO. UOP's Pacol* process for the catalytic dehydrogenation of *n*-paraffins and UOP's HF Detergent Alkylate* process for the alkylation of the LIO with benzene are prime examples of this approach. A similar approach is also practiced by Huntsman Corp. (formerly Monsanto's).[2,3]

During the early days of LAB production, paraffin chlorination followed by alkylation over $AlCl_3$ gained some prominence. However, since the late 1960s, the dehydrogenation and HF alkylation route has been the most prominent because of its economic advantages

*Trademark and/or service mark of UOP.

Downloaded from Digital Engineering Library @ McGraw-Hill (www.digitalengineeringlibrary.com)
Copyright © 2004 The McGraw-Hill Companies. All rights reserved.
Any use is subject to the Terms of Use as given at the website.

LINEAR ALKYLBENZENE (LAB) MANUFACTURE

and higher-quality product. Although LAO and LIO obtained from sources other than dehydrogenation can equally be used, *n*-paraffin dehydrogenation routes have usually prevailed because of the lower cost of the starting kerosene fractions. Table 1.5.1 shows an approximate 2001 distribution of world LAB production employing these technologies. The dehydrogenation followed by alkylation route accounts for 81 percent of world LAB production. The Detal* process, which replaces HF with a solid heterogenous acid catalyst, was introduced in 1995. The various routes for the production of LAB are illustrated schematically on Fig. 1.5.1.

COMMERCIAL EXPERIENCE

The first commercial operations of UOP's dehydrogenation and alkylation technologies were in Japan and Spain at the end of 1968. Almost all the units built since then throughout the world employ UOP technology. Over the years, UOP has continued research and development and has introduced numerous improvements that resulted in improved economics of LAB manufacture as well as consistently improved product quality. More than 30 LAB units now operate around the world with this process technology.

*Trademark and/or service mark of UOP.

TABLE 1.5.1 2001 World LAB Production by Technology Route

Technology route	Production, %
Chlorination and alkylation	10
Dehydrogenation and alkylation	81
High-purity olefins to alkylation	9
Total	100

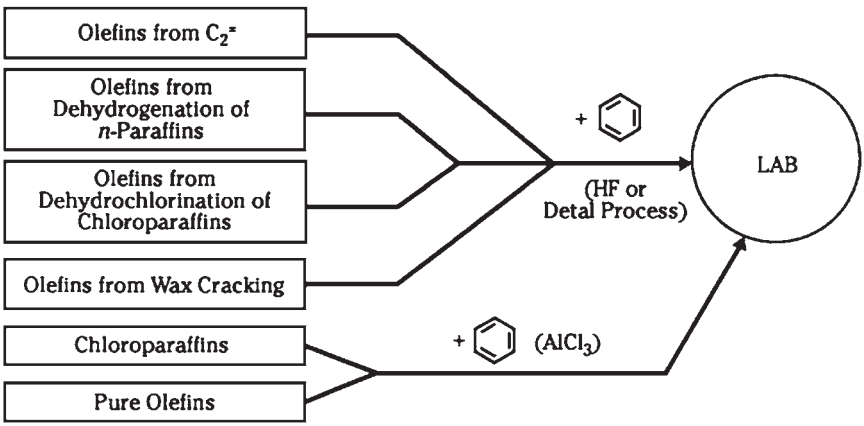

FIGURE 1.5.1 Routes to LAB.

Downloaded from Digital Engineering Library @ McGraw-Hill (www.digitalengineeringlibrary.com)
Copyright © 2004 The McGraw-Hill Companies. All rights reserved.
Any use is subject to the Terms of Use as given at the website.

LINEAR ALKYLBENZENE (LAB) MANUFACTURE

The new Detal process was developed jointly by UOP and PETRESA, a wholly owned subsidiary of CEPSA in Spain. The process uses a fixed bed of acidic, noncorrosive catalyst to replace the liquid HF acid used in the present UOP HF Detergent Alkylate process.

The catalyst of choice for LAB production has been HF acid since the first Pacol unit came on-stream in 1968. Its high efficiency, superior product, and ease of use relative to the older $AlCl_3$ catalyst are the reasons for this success. However, in both the HF- and the $AlCl_3$-catalyzed processes, the handling of corrosive catalysts has had implications in terms of the increased capital cost of the plant as well as in the disposal of the small quantities of neutralization products generated in the process. Hence, the advantages of a heterogeneous catalyst in this application have long been recognized.

Aromatic alkylation has been demonstrated over many acidic solids, such as clay minerals, zeolites, metal oxides, and sulfides. Although many of these catalysts are highly active, they are usually lacking in selectivity or stability. The key to a successful solid-bed alkylation process is the development of a catalyst that is active, selective, and stable over prolonged periods of operation. Research at PETRESA and UOP resulted in the development of a solid catalyst for the alkylation of benzene with linear olefins to produce LAB. The resulting Detal process was proved at UOP's pilot plants and at PETRESA's semiworks facility in Spain and is now in commercial operation. As of today, there are three operating Detal units worldwide and three more in the design phase. The process produces a consistent-quality product that meets all detergent-grade LAB specifications.

The simplified flow diagrams in Figs. 1.5.2 and 1.5.3 illustrate the main differences between the HF Detergent Alkylate and Detal processes. Figure 1.5.4 shows an integrated LAB complex that incorporates Pacol, DeFine,* and detergent alkylation units. The flow scheme for the Pacol and DeFine units remains unchanged for either an HF- or a solid-catalyzed, fixed-bed alkylation unit.

In the HF Detergent Alkylate process, olefin feed from the Pacol-DeFine units is combined with makeup and recycle benzene and is cooled prior to mixing with HF acid. The reaction section consists of a mixer reactor and an acid settler. A portion of the HF acid phase from the settler is sent to the HF acid regenerator, where heavy by-products are removed to maintain acid purity. The hydrocarbon phase from the acid settler proceeds to the fractionation section, where the remaining HF acid, excess benzene, unreacted *n*-paraffins, heavy alkylate, and LAB product are separated by means of sequential fractionation columns. The HF acid and benzene are recycled to the alkylation reactor. The unreacted *n*-paraffins are passed through an alumina treater to remove combined fluorides and are then recycled to the dehydrogenation unit. The flow diagram in Fig. 1.5.2 shows the HF acid handling and neutralization section, which is required for the safe operation of the plant and is always included within battery limits. This section represents a significant portion of the investment cost of HF alkylation plants.

In the Detal scheme (Fig. 1.5.3), olefin feed combined with makeup and recycle benzene flows through a fixed-bed reactor, which contains the solid catalyst. The reaction occurs at mild conditions in the liquid phase. Reactor effluent flows directly to the fractionation section, which remains the same as for the HF acid system except that the HF acid stripper column and the alumina treater are eliminated. Also eliminated is the entire HF reactor section, including the mixer reactor, acid settler, HF acid regenerator, and associated piping. In addition, all the equipment and special metallurgy required for the safe handling of HF acid, neutralization of effluent steams, and disposal of the neutralization products are not required.

Because hydrocarbons such as paraffins, olefins, benzene, and alkylbenzenes are handled in the Detal process, only carbon-steel construction is used. Thus, the Monel parts and special pump seals used in HF service are eliminated.

*Trademark and/or service mark of UOP.

Downloaded from Digital Engineering Library @ McGraw-Hill (www.digitalengineeringlibrary.com)
Copyright © 2004 The McGraw-Hill Companies. All rights reserved.
Any use is subject to the Terms of Use as given at the website.

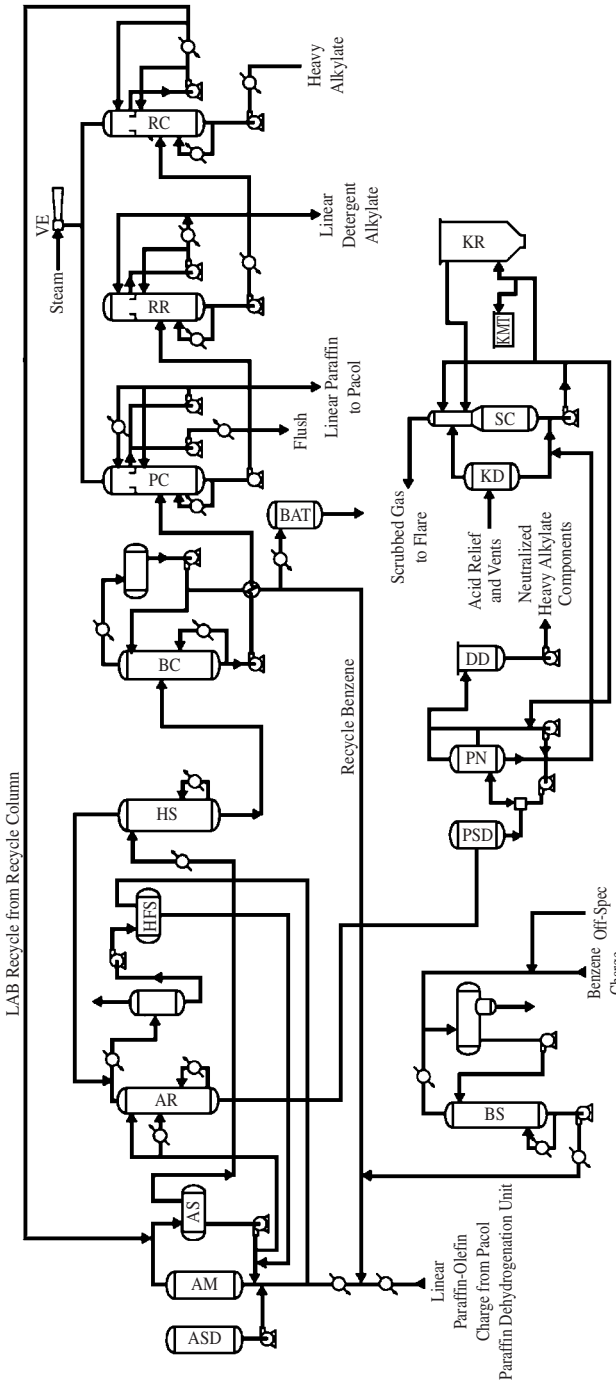

FIGURE 1.5.2 HF Detergent Alkylate process.

Downloaded from Digital Engineering Library @ McGraw-Hill (www.digitalengineeringlibrary.com)
Copyright © 2004 The McGraw-Hill Companies. All rights reserved.
Any use is subject to the Terms of Use as given at the website.

LINEAR ALKYLBENZENE (LAB) MANUFACTURE

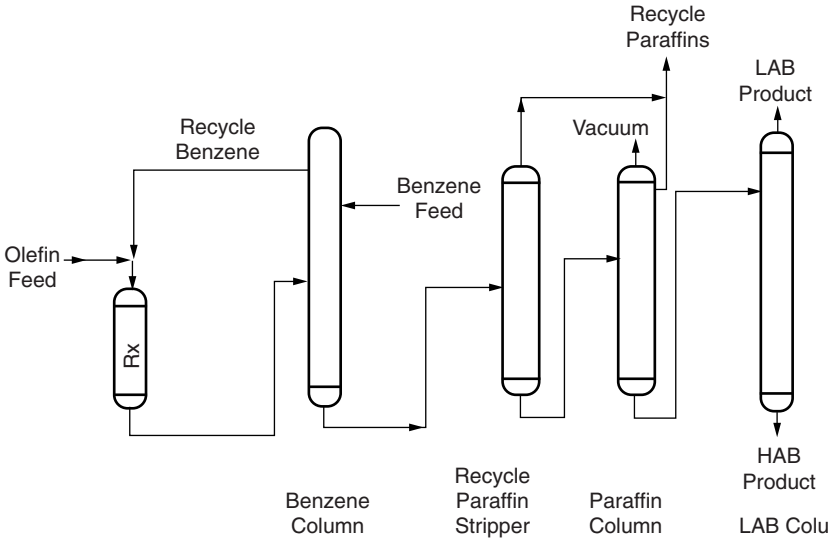

FIGURE 1.5.3 Detal process flow scheme.

Research on the Detal catalyst showed that diolefins and some other impurities, mostly aromatics, coming from the Pacol dehydrogenation unit have a substantial impact on the activity and stability of the Detal catalyst as well as on LAB quality. Thus, a DeFine process unit must be included to convert all diolefins to monoolefins. Additionally, UOP developed technology to remove aromatics from the alkylation feed. Normally, these aromatics alkylate with olefins and produce a heavy alkylate by-product in the alkylation unit. Thus, aromatics removal has two benefits: increased LAB yield per unit of olefins and improved activity of the Detal catalyst.

PRODUCT QUALITY

Table 1.5.2 compares LAB product properties for the two catalyst systems: HF and Detal. The quality of the two products is similar, but LAB produced from Detal units has slightly higher linearity. Both processes achieve low levels of tetralins in the LAB. However, the Detal process achieves a lower level (less than 0.5) of tetralins compared to the HF process.

The Detal LAB product also produces a lighter-colored sulfonate. As shown in Table 1.5.2, the Klett color of a 5% active solution of Detal-derived LAS is typically lower than that of LAS obtained by using HF.

The most significant difference between HF and Detal LAB is in the higher 2-phenylalkane content of the LAB obtained in the Detal process. This higher content of 2-phenylalkane improves the solubility of the sulfonated LAB. The difference is particularly important in liquid formulations, as illustrated in Fig. 1.5.5, which shows the cloud point of the LAS derived from both systems. Over the range of 13% to 25% active solution of sodium LAS, the Detal derived product exhibits a lower cloud point and is much less sensitive to concentration compared with the HF derived product.

Downloaded from Digital Engineering Library @ McGraw-Hill (www.digitalengineeringlibrary.com)
Copyright © 2004 The McGraw-Hill Companies. All rights reserved.
Any use is subject to the Terms of Use as given at the website.

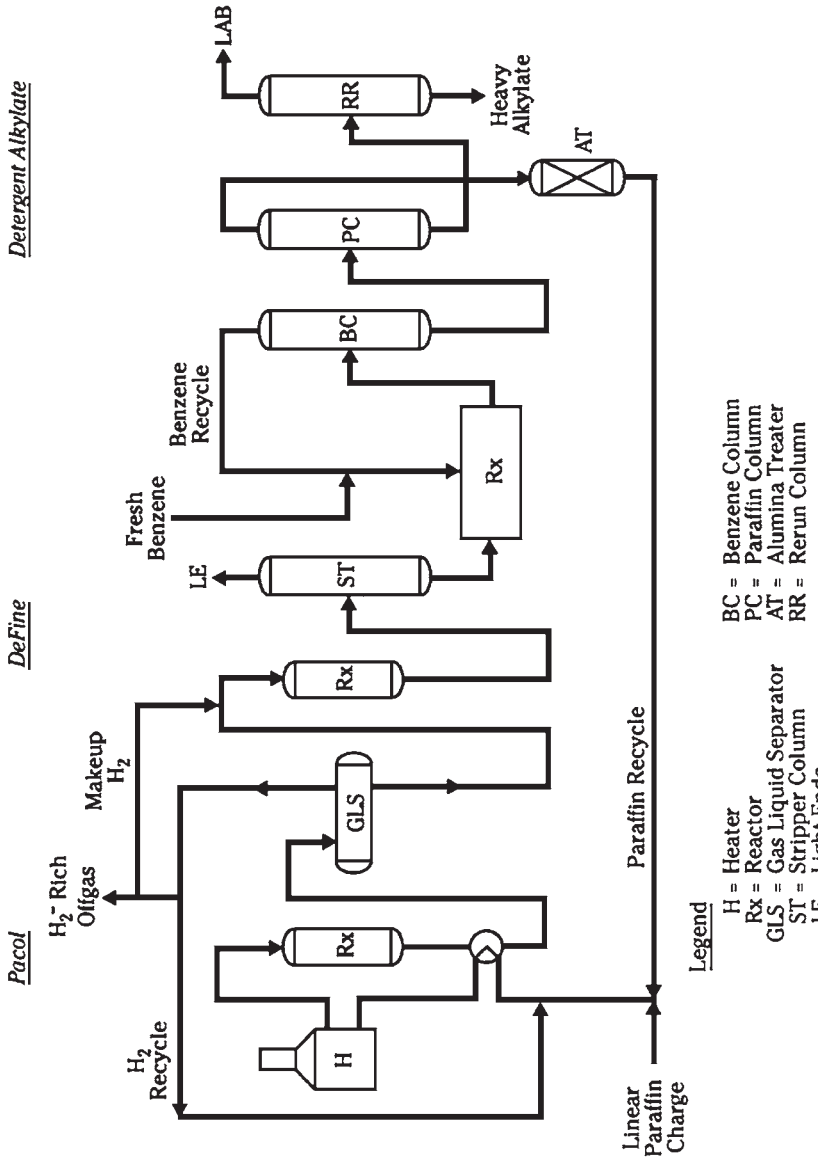

FIGURE 1.5.4 Production of LAB from linear paraffins.

Downloaded from Digital Engineering Library @ McGraw-Hill (www.digitalengineeringlibrary.com)
Copyright © 2004 The McGraw-Hill Companies. All rights reserved.
Any use is subject to the Terms of Use as given at the website.

LINEAR ALKYLBENZENE (LAB) MANUFACTURE

TABLE 1.5.2 Comparison of HF and Detal LAB

	Typical HF LAB	Typical Detal LAB
Specific gravity	0.86	0.86
Bromine index	<15	<10
Saybolt color	+30	+30
Water, ppm	<100	<100
Tetralins, wt %	<1.0	<0.5
2-Phenyl-alkanes, wt %	15–18	>25
n-Alkylbenzene, wt %	93	94
Klett color of 5% active LAS solution	20–40	10–30

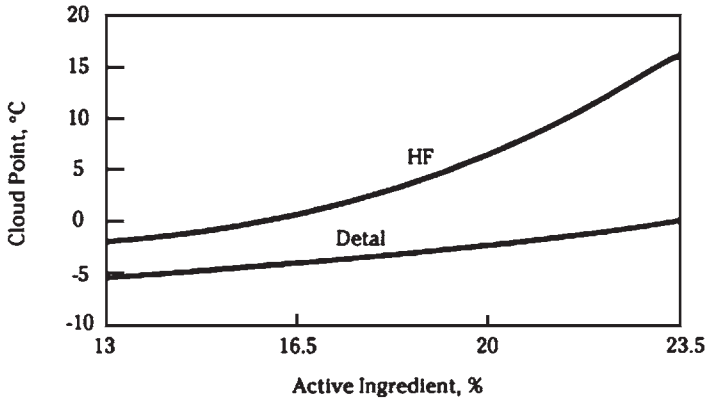

FIGURE 1.5.5 Solubility comparison of HF and Detal LAS.

ECONOMICS

A comparative economic analysis was prepared for the production of 80,000 MTA of LAB using either the HF Detergent Alkylate or the Detal process. The complex was assumed to consist of Pacol, DeFine, and HF Detergent Alkylate or Detal units (with aromatics removal in the latter) as well as a common hot-oil belt. The equipment was sized on the assumption of 8000 h on-stream per year, which corresponds to an effective production capacity of 240 metric tons (MT) per stream-day.

The erected cost for the complex based on the HF Detergent Alkylate process is estimated at $56 million. The same complex using the Detal process has an estimated erected cost of $45 million. All design, construction, and labor costs were estimated on an open-shop basis for a U.S. Gulf Coast location.

The economic analysis is summarized in Table 1.5.3. The yields represent the production of LAB with an average molecular weight of 240.

By-product credits include hydrogen at about 95 mol % purity, light ends, heavy alkylate, and HF regenerator bottoms. Utility requirements correspond to a typical modern design of the UOP LAB complex. The cost of effluent treatment and disposal has not been included in this analysis.

The combined investment for the Pacol, DeFine, and the hot-oil units for the two cases is essentially the same. The fixed plant investment for the alkylation section has been reduced

Downloaded from Digital Engineering Library @ McGraw-Hill (www.digitalengineeringlibrary.com)
Copyright © 2004 The McGraw-Hill Companies. All rights reserved.
Any use is subject to the Terms of Use as given at the website.

LINEAR ALKYLBENZENE (LAB) MANUFACTURE

TABLE 1.5.3 Economic Comparison of HF Detergent Alkylate and Detal Processes in a LAB Complex*

		HF Alkylation, per MT LAB		Detal, per MT LAB	
	Unit cost, $	Quantity	$	Quantity	$
Raw materials:					
n-Paraffins, MT	480	0.78	350	0.78	352
Benzene, MT	300	0.33	99	0.33	100
By-product credits, MT	—	0.33	20	—	21
Catalysts and chemicals	—	—	21	—	28
Utilities:					
Power, kWh	0.05	283	14	281	14
Cooling water, m^3	0.02	81	2	24	1
Fuel fired, million kcal	3.74	2.86	25	3.04	27
Fixed costs	—	—	—	—	—
Cash cost of production	—	—	545	—	548
Cash flow, million $ (LAB at $850/ton)			24.4		24.2
Estimated erected cost, million $			70.1		56.6
Simple payback, years (on fixed investment)			2.2		1.9

*Basis: Production cost for 80,000-MTA LAB.
Note: MT = metric tons; MTA = metric tons per annum.

TABLE 1.5.4 Historical Demand for LAB by Geographic Areas

	LAB consumption, 10^3 MTA	
Area	1980	2000
Europe and former Soviet Union	415	470
Africa	35	140
Middle East	30	170
Asia	280	800
Americas	290	820
Total	1050	2400

Note: MTA = metric tons per annum.

by some 15 percent. The absence of HF acid, and hence the absence of the corresponding neutralization facilities for the acidic wastes, is reflected in a lower operating cost.

MARKETS

The evolution in the demand for LAB differs in the various geographic areas. Since the early 1990s, these different growth rates have reflected not only the maturity of the most economically developed markets but also the trend toward a healthier economic future. Table 1.5.4 summarizes the consumption of LAB in various geographic areas for the years 1980 and 2000. The per capita consumption, in kilograms per year, was used to forecast the potential expected LAB demand worldwide. Figure 1.5.6 reflects the situation in 1991 in these same geographic areas in terms of kilograms per capita per year. The data in the table and the figure highlight the consumption trends in various markets of the world. From these data, scenarios can be established for various parts of the world.

Downloaded from Digital Engineering Library @ McGraw-Hill (www.digitalengineeringlibrary.com)
Copyright © 2004 The McGraw-Hill Companies. All rights reserved.
Any use is subject to the Terms of Use as given at the website.

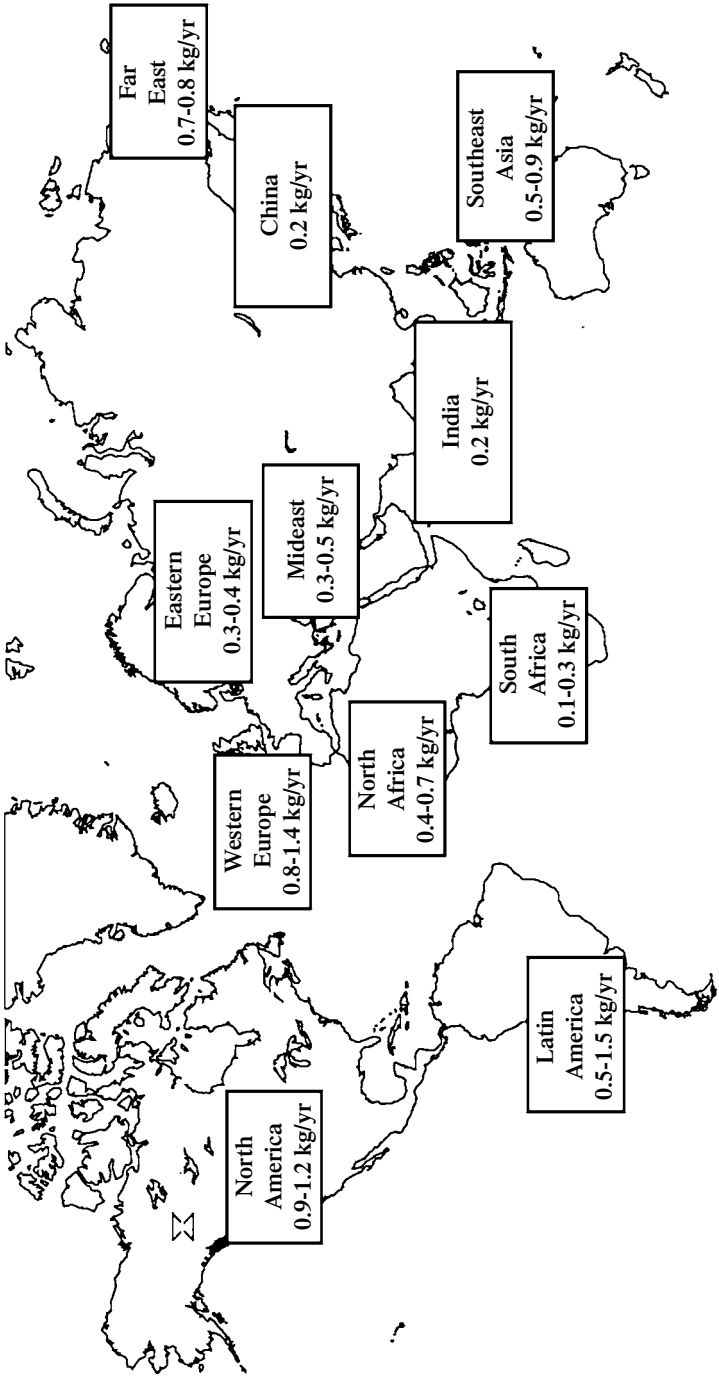

FIGURE 1.5.6 Estimated per capita LAB consumption in 1991.

Downloaded from Digital Engineering Library @ McGraw-Hill (www.digitalengineeringlibrary.com)
Copyright © 2004 The McGraw-Hill Companies. All rights reserved.
Any use is subject to the Terms of Use as given at the website.

LINEAR ALKYLBENZENE (LAB) MANUFACTURE

CONCLUSIONS

LAB continues to be the most cost-effective detergent intermediate, regardless of raw material source. The continuing growth in LAB is spurred by increasing consumption in countries outside the Organization of Economic Commercial Development (OECD). Worldwide LAB consumption is expected to increase by some 650,000 MTA over the next 10 years. Increasing trade between various LAB-producing regions has led to more-uniform, high-quality requirements for the product in different parts of the world.

Developments in LAB technology have addressed the important issues confronting the industry in the 1990s: improved yields and economics, product quality, and environmental and safety considerations.

The use of large volumes of LAS derived from LAB over the last 40 years has resulted in extensive environmental studies of this surfactant by industry and consumer groups. No other surfactant type has undergone such intense scrutiny. This scrutiny has resulted in the development of improved methods for LAS detection outside of laboratory situations and model predictions. The use of these techniques in real-world monitoring in various countries during the last decade has only confirmed the long-term viability of LAS from the standpoint of environmental safety.

ACKNOWLEDGMENTS

This chapter was adapted from a paper entitled "Growth and Developments in LAB Technologies: Thirty Years of Innovation and More to Come," by J. L. Berna and A. Moreno of PETRESA, Spain, and A. Banerji, T. R. Fritsch, and B. V. Vora of UOP, Des Plaines, Illinois, U.S.A. The paper was presented at the 1993 World Surfactant Congress held in Montreux, Switzerland, on September 23, 1993.

REFERENCES

1. ARCO Technology Inc., Hydrocarbon Processing, **64** (11), 127, 1985.
2. J. F. Roth and A. R. Schaefer, U.S. Patent 3,356,757 (to Monsanto).
3. R. E. Berg and B. V. Vora, *Encyclopedia of Chemical Processing and Design,* vol. 15, Marcel Dekker, New York, 1982, pp. 266–284.
4. E. Matthijs and H. de Henau, "Determination of LAS," *Tenside Surfactant Detergents,* **24,** 193–199, 1987.
5. J. L. Berna et al., "The Fate of LAS in the Environment," *Tenside Surfactant Detergents,* **26,** (2), 101–107, 1989.
6. H. A. Painter et al., "The Behaviour of LAS in Sewage Treatment Plants," *Tenside Surfactant Detergents,* **26,** (2), 108–115, 1989.

Downloaded from Digital Engineering Library @ McGraw-Hill (www.digitalengineeringlibrary.com)
Copyright © 2004 The McGraw-Hill Companies. All rights reserved.
Any use is subject to the Terms of Use as given at the website.

Downloaded from Digital Engineering Library @ McGraw-Hill (www.digitalengineeringlibrary.com)
Copyright © 2004 The McGraw-Hill Companies. All rights reserved.
Any use is subject to the Terms of Use as given at the website.

Source: HANDBOOK OF PETROLEUM REFINING PROCESSES

CHAPTER 1.6
Q-MAX™ PROCESS FOR CUMENE PRODUCTION

Gary A. Peterson and Robert J. Schmidt
UOP LLC
Des Plaines, Illinois

INTRODUCTION

The Q-Max™ process converts benzene and propylene to high-quality cumene by using a regenerable zeolitic catalyst. The Q-Max process represents a substantial improvement over older cumene technologies and is characterized by its exceptionally high yield, superior product quality, low investment and operating costs, reduction in solid waste, and corrosion-free environment.

Cumene is produced commercially through the alkylation of benzene with propylene over an acid catalyst. Over the years, many different catalysts have been proposed for this alkylation reaction, including boron trifluoride, hydrogen fluoride, aluminum chloride, and phosphoric acid. In the 1930s, UOP introduced the UOP catalytic condensation process, which used a solid phosphoric acid (SPA) catalyst to oligomerize light olefin by-products from petroleum thermal cracking into heavier paraffins that could be blended into gasoline. During World War II, this process was adapted to produce cumene from benzene and propylene to make a high-octane blending component for military aviation gasoline. Today, cumene is no longer used as a fuel, but it has grown in importance as a feedstock for the production of phenol.

Although SPA is a highly efficient and economical catalyst for cumene synthesis, it has two important limitations:

1. Cumene yield is limited to about 95 percent, because of the oligomerization of propylene and the formation of heavy alkylate by-products
2. The catalyst is not regenerable and must be disposed of at the end of each catalyst cycle.

In recent years, producers have been under increasing pressure to improve cumene product quality so that the quality of the phenol produced downstream (as well as acetone and *alpha*-methylstyrene, which are coproduced with phenol) could be improved. Twenty-five years ago, most phenol was used to produce phenolic resins, and acetone was used primarily as a solvent. Today, both phenol and acetone are used increasingly in the production of polymers such as polycarbonates and nylon. Over the years, improvements to the SPA

Downloaded from Digital Engineering Library @ McGraw-Hill (www.digitalengineeringlibrary.com)
Copyright © 2004 The McGraw-Hill Companies. All rights reserved.
Any use is subject to the Terms of Use as given at the website.

process managed to keep pace with the demand for higher cumene product quality, but producers still sought an improved cumene process that would produce a better-quality product at higher yield.

Because zeolites are known to selectively perform many acid-catalyzed reactions, UOP began searching for a new cumene catalyst that would overcome the limitations of SPA. UOP's objective was to develop a regenerable catalyst that would increase the yield of cumene and lower the cost of production. More than 100 different catalyst materials were screened, including mordenites, MFIs, Y-zeolites, amorphous silica-aluminas, and *beta*-zeolite. The most promising materials were modified to improve their selectivity and then subjected to more-rigorous testing. By 1992, UOP had selected the most promising catalyst based on *beta*-zeolite for cumene production and then began to optimize the process design around this new catalyst. The result of this work is the Q-Max process and the QZ-2000 catalyst system.

PROCESS CHEMISTRY

The synthesis of cumene from benzene and propylene is a modified Friedel-Crafts alkylation, which can be accomplished by many different acid catalysts. The basic alkylation chemistry and reaction mechanism are shown in Fig. 1.6.1. The olefin forms a carbonium ion intermediate, which attacks the benzene ring in an electrophilic substitution. The addition to the olefin double bond is at the middle carbon of propylene, in accordance with Markovnikov's rule. The addition of the isopropyl group to the benzene ring weakly activates the ring toward further alkylation, producing di-isopropyl-benzene (DIPB) and heavier alkylate by-products.

The QZ-2000 catalyst functions as strong acid. In the QZ-2000 catalyst, the active surface sites of the silica-alumina structure act to donate the proton to the adsorbed olefin. Because the QZ-2000 catalyst is a strong acid, it can be used at a very low temperature.

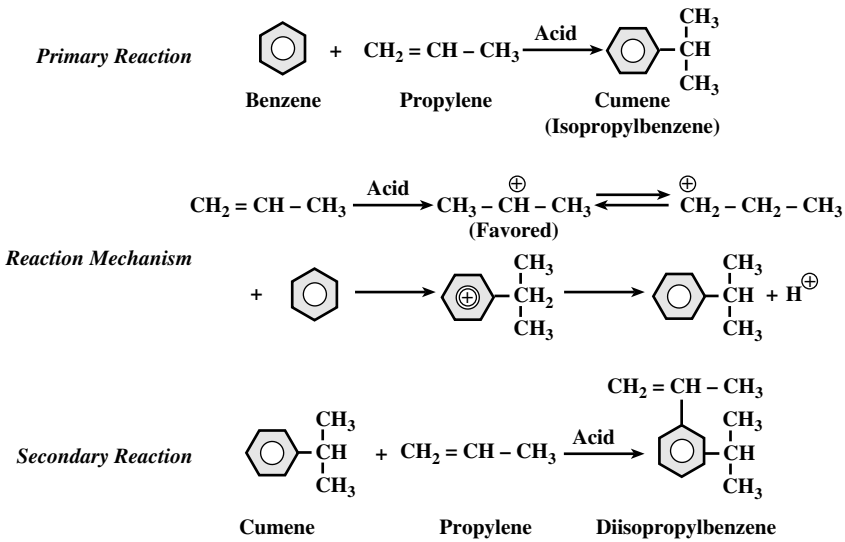

FIGURE 1.6.1 Alkylation chemistry.

Downloaded from Digital Engineering Library @ McGraw-Hill (www.digitalengineeringlibrary.com)
Copyright © 2004 The McGraw-Hill Companies. All rights reserved.
Any use is subject to the Terms of Use as given at the website.

Q-MAX™ PROCESS FOR CUMENE PRODUCTION

Low reaction temperature reduces the rate of competing olefin oligomerization reactions, resulting in higher selectivity to cumene and lower production of heavy by-products.

Transalkylation of DIPB

Transalkylation is the acid-catalyzed transfer of one isopropyl group from DIPB to a benzene molecule to form two molecules of cumene (Fig. 1.6.2). The Q-Max process is designed with an alkylation reactor section, which produces about 85 to 95 wt % cumene and 5 to 15 wt % DIPB. After recovery of the cumene product by fractionation, the DIPB is reacted with recycle benzene at optimal conditions for transalkylation to produce additional cumene. With the alkylation and transalkylation reactors working together to take full advantage of the QZ-2000 catalyst, the overall yield of cumene is increased to 99.7 wt %.

Side Reactions

In addition to the principal alkylation reaction of benzene with propylene, all acid catalysts promote the following undesirable side reactions to some degree (Fig. 1.6.3):

- *Oligomerization of olefins.* The model for acid-catalyzed alkylation is diffusion of the olefin to an active site saturated with benzene followed by adsorption and reaction. One possible side reaction is the combination of the propyl carbonium ion with propylene to form a C_6 olefin or even further reaction to form C_9, C_{12}, or heavier olefins.
- *Alkylation of benzene with heavy olefins.* Once heavy olefins have been formed through oligomerization, they may react with benzene to form hexylbenzene and heavier alkylated benzene by-products.
- *Polyalkylation.* The addition of an isopropyl group to the benzene ring to produce cumene weakly activates the ring toward further substitution, primarily at the *meta* and *para* positions, to make DIPB and heavier alkylates.
- *Hydride-transfer reactions.* Transfer of a hydrogen to an olefin by the tertiary carbon on cumene can form a cumyl carbonium ion that may react with a second benzene molecule to form diphenylpropane.

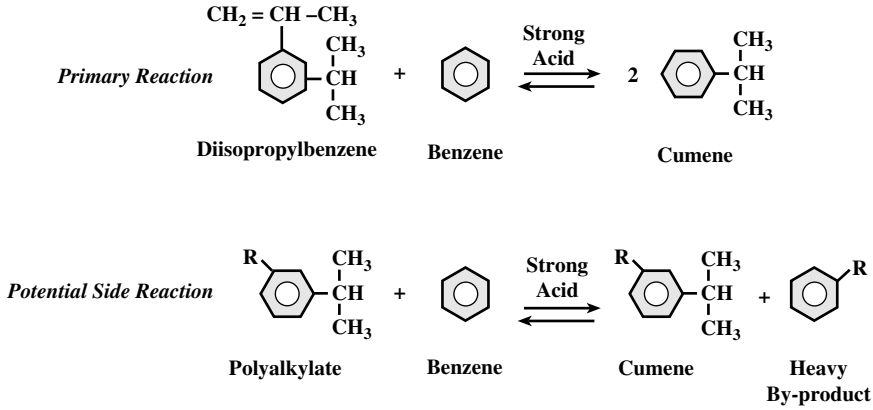

FIGURE 1.6.2 Transalkylation chemistry.

Downloaded from Digital Engineering Library @ McGraw-Hill (www.digitalengineeringlibrary.com)
Copyright © 2004 The McGraw-Hill Companies. All rights reserved.
Any use is subject to the Terms of Use as given at the website.

Q-MAX™ PROCESS FOR CUMENE PRODUCTION

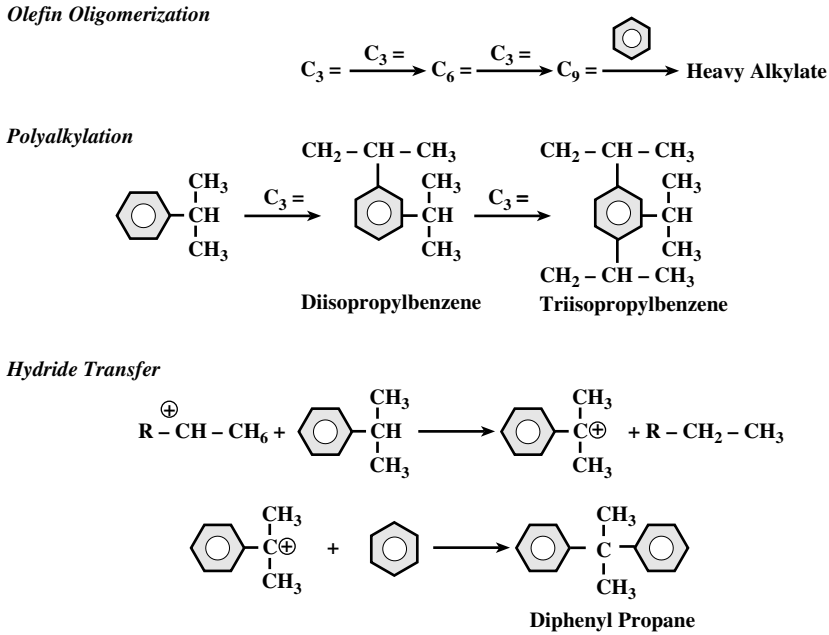

FIGURE 1.6.3 Possible alkylation side reactions.

In the Q-Max process, the reaction mechanism of the QZ-2000 catalyst and the operating conditions of the unit work together to minimize the impact of these side reactions. The result is an exceptionally high yield of cumene product.

DESCRIPTION OF THE PROCESS FLOW

A representative Q-Max flow diagram is shown in Fig. 1.6.4. The alkylation reactor is typically divided into four catalyst beds contained in a single reactor shell. The fresh benzene is routed through the upper midsection of the depropanizer column to remove excess water and then sent to the alkylation reactor via a sidedraw. The recycle benzene to both the alkylation and transalkylation reactors comes from the overhead of the benzene column. A mixture of fresh and recycle benzene is charged downflow through the alkylation reactor. The fresh propylene feed is split between the four catalyst beds. An excess of benzene is used to avoid polyalkylation and to help minimize olefin oligomerization. Because the reaction is exothermic, the temperature rise in the reactor is controlled by recycling a portion of the reactor effluent to the reactor inlet, which acts as a heat sink. In addition, the inlet temperature of each downstream bed is reduced to the same temperature as that of the first bed inlet by injecting a portion of cooled reactor effluent between the beds.

Effluent from the alkylation reactor is sent to the depropanizer column, which removes any propane and water that may have entered with the propylene feed. The bottoms from the depropanizer column are sent to the benzene column, where excess benzene is collected overhead and recycled. Benzene column bottoms are sent to the cumene column,

Downloaded from Digital Engineering Library @ McGraw-Hill (www.digitalengineeringlibrary.com)
Copyright © 2004 The McGraw-Hill Companies. All rights reserved.
Any use is subject to the Terms of Use as given at the website.

Q-MAX™ PROCESS FOR CUMENE PRODUCTION

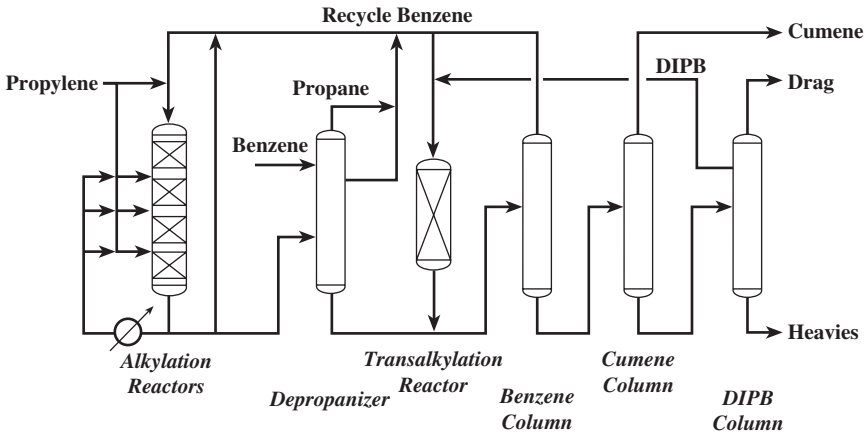

FIGURE 1.6.4 Process flow diagram.

where the cumene product is recovered overhead. The cumene column bottoms, which contain mostly di-isopropylbenzene, are sent to the DIPB column. The DIPB stream leaves the column by way of a sidecut and is recycled to the transalkylation reactor. The DIPB column bottoms consist of heavy aromatic by-products, which are normally blended into fuel oil. Steam or hot oil provides the heat for the product fractionation section.

A portion of the recycle benzene from the top of the benzene column is combined with the recycle DIPB from the sidecut of the DIPB column and sent to the transalkylation reactor. In the transalkylation reactor, DIPB and benzene are converted to additional cumene. The effluent from the transalkylation reactor is then sent to the benzene column.

The QZ-2000 catalyst utilized in both the alkylation and transalkylation reactors is regenerable. At the end of each cycle, the catalyst is typically regenerated *ex-situ* via a simple carbon burn by a certified regeneration contractor. However, the unit can also be designed for *in-situ* catalyst regeneration. Mild operating conditions and a corrosion-free process environment permit the use of carbon-steel construction and conventional process equipment.

FEEDSTOCK CONSIDERATIONS

Impact of Feedstock Contaminants on Cumene Purity

In the Q-Max process, the impact of undesirable side reactions is minimal, and impurities in the cumene product are governed primarily by trace contaminants in the feeds. Because of the high activity of the QZ-2000 catalyst, it can be operated at very low temperature, which dramatically reduces the rate of competing olefin oligomerization reactions and decreases the formation of heavy by-products. Thus, with the Q-Max process, cumene product impurities are primarily a result of impurities in the feedstocks. Table 1.6.1 lists the common cumene impurities of concern to phenol producers, and Fig. 1.6.5 graphically shows the reactions of some common feedstock contaminants that produce these impurities.

- *Cymene and ethylbenzene.* Cymene is formed by the alkylation of toluene with propylene. The toluene may already be present as an impurity in the benzene feed, or it may

Downloaded from Digital Engineering Library @ McGraw-Hill (www.digitalengineeringlibrary.com)
Copyright © 2004 The McGraw-Hill Companies. All rights reserved.
Any use is subject to the Terms of Use as given at the website.

TABLE 1.6.1 Common Cumene Impurities

Trace contaminant	Concern in downstream phenol unit
Nonaromatics	Form acids and other by-products in phenol unit, yield loss
Ethylbenzene	Forms acetaldehyde, an acetone contaminant
n-Propylbenzene	Forms propionaldehyde, an acetone contaminant
Butylbenzenes	Resist oxidation, an *alpha*-methylstyrene contaminant
Cymenes	Form cresols, phenol contaminants
Polyalkylates	Form alkylphenols, yield loss

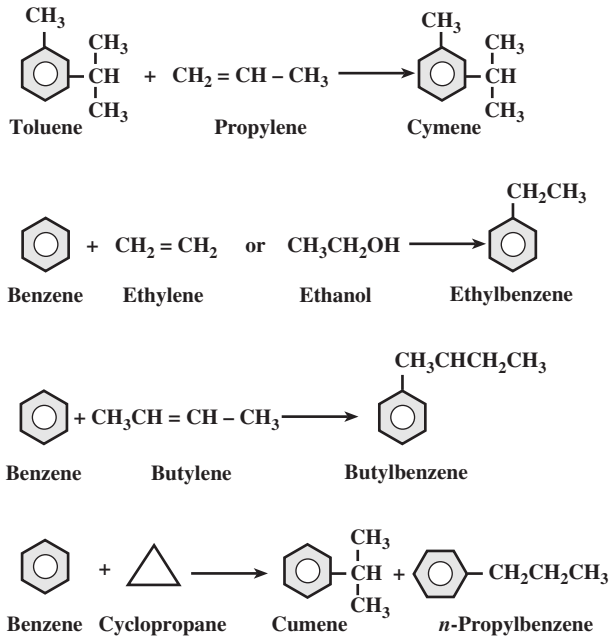

FIGURE 1.6.5 Reactions of feed impurities.

be formed in the alkylation reactor from methanol and benzene. Ethylbenzene is primarily formed from ethylene impurities in the propylene feed. However, as with cymene, ethylbenzene can also be formed from ethanol. Small quantities of methanol and ethanol are sometimes added to the C_3's in a pipeline to protect against hydrate freezing. Although the Q-Max catalyst is tolerant of these alcohols, removing them from the feed by a water wash may be desirable to achieve the lowest possible levels of ethylbenzene or cymene in the cumene product.

- *Butylbenzene.* Although butylbenzene is produced primarily from traces of butylene in the propylene feed, it may also be created through the oligomerization of olefins. However, the very low reaction temperature of the Q-Max process reduces oligomerization, resulting in minimal overall butylbenzene formation.

Downloaded from Digital Engineering Library @ McGraw-Hill (www.digitalengineeringlibrary.com)
Copyright © 2004 The McGraw-Hill Companies. All rights reserved.
Any use is subject to the Terms of Use as given at the website.

Q-MAX™ PROCESS FOR CUMENE PRODUCTION

- *n-Propylbenzene.* The *n*-propylbenzene (NPB) is produced from trace levels of cyclopropane in the propylene feed. The chemical behavior of cyclopropane is similar to that of an olefin: It reacts with benzene to form either cumene or NPB. The tendency to form NPB rather than cumene decreases as the reaction temperature is lowered. Unfortunately, the catalyst deactivation rate increases with lower reaction temperature (Fig. 1.6.6). Because of the exceptional stability of the QZ-2000 catalyst system, a Q-Max unit can be operated for extended cycle lengths and still maintain an acceptable level of NPB in the cumene product. For example, with a typical FCC-grade propylene feed containing normal amounts of cyclopropane, the Q-Max process can produce a cumene product containing less than 250 wt ppm NPB and maintaining an acceptable catalyst cycle length.

Impact of Catalyst Poisons on Catalyst Performance

A list of potential Q-Max catalyst poisons is found in Table 1.6.2. All the listed compounds are known to neutralize the acid sites of zeolites. Good feedstock treating practice or proven guard-bed technology easily handles these potential poisons.

Water in an alkylation environment can act as a Brønsted base to neutralize some of the stronger zeolite acid sites first. However, as a result of the inherently high activity of the Q-Max catalyst, water does not have a detrimental effect at the typical feedstock moisture levels and normal alkylation and transalkylation conditions. The Q-Max catalyst can process feedstocks up to the normal water saturation conditions, typically 500 to 1000 ppm, without any loss of catalyst stability or activity.

Sulfur does not affect Q-Max catalyst stability or activity at the levels normally present in the propylene and benzene feeds processed for cumene production. However, trace sulfur in the cumene product, for example, might be a concern in the downstream production of certain monomers (e.g., phenol hydrogenation for caprolactam). Within the Q-Max unit, the majority of sulfur compounds associated with propylene (mercaptans) and those associated with benzene (thiophenes) are converted to products outside the boiling range of cumene. However, the sulfur content of the cumene product does depend on the sulfur content of the propylene and especially benzene feeds. Sulfur at the levels normally pres-

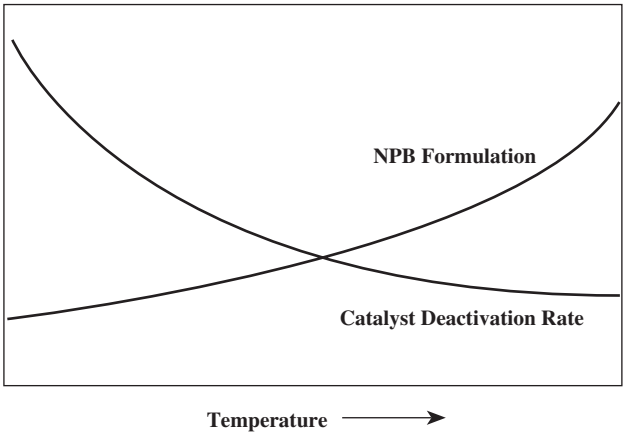

FIGURE 1.6.6 Effect of reactor temperature.

Downloaded from Digital Engineering Library @ McGraw-Hill (www.digitalengineeringlibrary.com)
Copyright © 2004 The McGraw-Hill Companies. All rights reserved.
Any use is subject to the Terms of Use as given at the website.

TABLE 1.6.2 Handling Potential Catalyst Poisons

Poison	Source	Removal
Basic nitrogen	Trace levels in feedstocks	Guard bed
Ammonia	Common impurity in FCC propylene	Water wash or guard bed
Arsine (AsH_3)	Common impurity in FCC propylene	Guard bed

ent in propylene and benzene feeds considered for cumene production will normally result in cumene product sulfur content that is within specifications (for example, <1 wt ppm).

Successful operation with a wide variety of propylene feedstocks from different sources has demonstrated the flexibility of the Q-Max process. Chemical-grade, FCC-grade, and polymer-grade propylene feedstocks can all be used to make high-quality cumene product.

PROCESS PERFORMANCE

The Q-Max unit has high raw material utilization and an overall cumene yield of at least 99.7 wt % based on using typical propylene and benzene feedstock. The remaining 0.3 wt % or less of the overall yield is in the form of a heavy aromatic by-product.

The cumene product quality summarized in Table 1.6.3 is representative of a Q-Max unit processing commercially available, high-quality feedstocks. The quality of the cumene product from any specific Q-Max unit is strongly influenced by the specific contaminants present in the feedstocks.

Propane entering the unit with the propylene feedstock is unreactive in the process and is separated in the fractionation section as a propane product.

CASE STUDY

A summary of the investment cost and utility consumption for a new Q-Max unit producing 200,000 MTA of cumene from extracted benzene and chemical-grade propylene is shown in Table 1.6.4. The estimated erected cost for the Q-Max unit assumes construction on a U.S. Gulf Coast site in 2002. The scope of the estimate includes basic engineering, procurement, erection of equipment on the site, and the initial load of QZ-2000 catalyst.

TABLE 1.6.3 Representative Cumene Product Quality

Cumene purity, wt %	≥ 99.97
Bromine index	≤ 10
Sulfur, wt ppm	≤ 0.1
Specific impurities, wt ppm:	
Ethylbenzene	≤ 30
n-Propylbenzene	≤ 250
Butylbenzene	≤ 20
Cymene	≤ 5
Di-isopropylbenzene	≤ 10
Total nonaromatics	≤ 20

Downloaded from Digital Engineering Library @ McGraw-Hill (www.digitalengineeringlibrary.com)
Copyright © 2004 The McGraw-Hill Companies. All rights reserved.
Any use is subject to the Terms of Use as given at the website.

Q-MAX™ PROCESS FOR CUMENE PRODUCTION

TABLE 1.6.4 Investment and Operating Cost for 200,000 MTA Q-Max Unit

Feedstock requirements:	
Extracted benzene (99.8 wt %)	132,300 MTA
Chemical-grade propylene (95 wt %)	74,240 MTA
Utility consumption per MT cumene produced:	
Electric power	12.3 kWh
High-pressure steam	0.81 MT
Medium-pressure steam	0.20 MT
Low-pressure steam credit	−0.31 MT
Cooling water	3.1 m^3
Erected cost estimate	$14.2 million

The utility requirements for a Q-Max unit depend on the project environment (i.e., feed, product specifications, and utility availability). Q-Max units are often integrated with phenol plants where energy use can be optimized by generating low-pressure steam in the Q-Max unit for utilization in the phenol plant.

COMMERCIAL EXPERIENCE

The first Q-Max unit went on-stream in 1996. Since that time, UOP has licensed a total of nine Q-Max units throughout the world having a total plant capacity of 2.3 million MTA of cumene. Six Q-Max units have been commissioned and three more are in various stages of design or construction. Capacities range from 35,000 to 700,000 MTA of cumene produced. Several of these units have been on-stream for more than 5 years without performing a single catalyst regeneration.

BIBLIOGRAPHY

Jeanneret, J. J., D. Greer, P. Ho, J. McGeehee, and H. Shakir: "The Q-Max Process: Setting the Pace for Cumene Production," *DeWitt Petrochemical Review,* Houston, March 1997.

Schmidt, R. J., A. S. Zarchy, and G. A. Peterson: "New Developments in Cumene and Ethylbenzene Alkylation," AIChE Spring Meeting, New Orleans, March 2002.

Downloaded from Digital Engineering Library @ McGraw-Hill (www.digitalengineeringlibrary.com)
Copyright © 2004 The McGraw-Hill Companies. All rights reserved.
Any use is subject to the Terms of Use as given at the website.

Downloaded from Digital Engineering Library @ McGraw-Hill (www.digitalengineeringlibrary.com)
Copyright © 2004 The McGraw-Hill Companies. All rights reserved.
Any use is subject to the Terms of Use as given at the website.

Source: HANDBOOK OF PETROLEUM REFINING PROCESSES

CHAPTER 1.7

CONOCOPHILLIPS REDUCED VOLATILITY ALKYLATION PROCESS (ReVAP)

Mark L. Gravley
ConocoPhillips
Fuels Technology
Bartlesville, Oklahoma

INTRODUCTION

During the late 1930s, Phillips Petroleum Company researchers discovered the benefits of using hydrofluoric acid to catalyze the synthesis of high-octane fuels from a broad range of low-value C_3, C_4, and C_5 feedstocks. This research, as well as pilot-plant data, led to the commercialization of the HF Alkylation process at Phillips' Borger, Texas, refinery in 1942 to provide aviation gasoline during World War II. Since that time, alkylate has been, and continues to be, a valuable high-octane blending component for gasoline, as evidenced by its importance in refineries around the world. ConocoPhillips has built 11 HF Alkylation units in its own refineries and has licensed over 100 grassroots units.

Today, worldwide alkylation capacity exceeds 1.81 million bbl/day, with HF-based processes accounting for approximately 57 percent of the total. Isobutane alkylate is an important component of modern fuels, due to the high-octane, clean-burning characteristics as well as the low vapor pressure and absence of sulfur, olefins, or aromatics. Alkylation is receiving renewed attention by refiners contemplating the replacement of MTBE in gasoline.

CHEMISTRY

Alkylation occurs when isobutane reacts with olefins in the presence of hydrofluoric acid as the catalyst to produce branched paraffins. In simplest terms, those reactions are

Downloaded from Digital Engineering Library @ McGraw-Hill (www.digitalengineeringlibrary.com)
Copyright © 2004 The McGraw-Hill Companies. All rights reserved.
Any use is subject to the Terms of Use as given at the website.

CONOCOPHILLIPS REDUCED VOLATILITY ALKYLATION PROCESS (ReVAP)

$$\text{Propylene} + \text{isobutane} \rightarrow \text{2,3-dimethylpentane}$$

$$\text{Isobutylene} + \text{isobutane} \rightarrow \text{2,2,4-trimethylpentane}$$

$$\text{1-Butene} + \text{isobutane} \rightarrow \text{2,2-dimethylhexane}$$

$$\text{2-Butene} + \text{isobutane} \rightarrow \text{2,2,4- and 2,3,4-trimethylpentane}$$

$$\text{Amylene} + \text{isobutane} \rightarrow C_9H_{20} \text{ (various isomers)}$$

The trimethylpentanes are the preferred reaction products because they generally have the highest octane value. In practice, however, the reactions are not so simple. Reactions involving isomerization, hydrogen transfer, dimerization, polymerization, β-scission (or cracking), and disproportionation lead to a range of products. Furthermore, these side reactions produce substantial quantities of trimethylpentanes even when propylene or amylenes are the olefin feed. Polymerization produces conjunct polymers, which are complex, cyclic molecules, and this material is known as *acid-soluble oil* (ASO).

The reactions are also affected by the dispersion of hydrocarbons in the acid, the reaction temperature, the ratio of isobutane to olefin in the reaction zone, and the presence of water and ASO in the circulating acid. Since the hydrocarbon feeds are only slightly soluble in the HF acid, the reaction is enhanced by dispersing the hydrocarbons in the acid. Improved dispersion, i.e., smaller droplets of hydrocarbon, results in an alkylate product with more of the desired trimethylpentanes and lower amounts of the undesirable lighter and heavier compounds. Lower reaction temperature also favors the desired reaction products. A large excess of isobutene—above the stoichiometric amount—also favors the production of higher amounts of trimethylpentanes. Thus, the purity of isobutane in the recycle stream has an effect on alkylate quality, and buildup of C_5+ components in this stream should be avoided. Small amounts of water enter the alkylation unit in the olefin and isobutane feeds. The water is allowed to accumulate in the acid phase and is found to be beneficial in that it produces alkylate with higher concentration of C_8 components and thus higher octane. Water in the HF is beneficial at levels up to about 3 to 4 wt %. However, water contents above about 2.0 percent generally have a detrimental effect on corrosion rates in the unit and are avoided.

DESCRIPTION OF THE CONOCOPHILLIPS HF ALKYLATION PROCESS

Isobutane reacts with propylene, butenes, and/or amylenes in the presence of hydrofluoric acid to produce a high-octane alkylate for motor gasoline. The reactions produce a variety of products, primarily C_8 branched paraffins, with lesser amounts of C_7 and C_9 branched paraffins and small amounts of lighter and heavier paraffins. For best operation, the following feedstock contaminant levels are recommended:

Sulfur—20 wt ppm maximum

Water—20 wt ppm maximum

Butadiene—3000 wt ppm maximum

C_6+—0.1 LV % maximum

Oxygenates (MTBE, dimethyl ether, etc.)—30 wt ppm maximum

An alkylation unit will operate with feed contaminant at higher than the levels indicated above, but the adverse consequences are higher acid consumption, higher production of

Downloaded from Digital Engineering Library @ McGraw-Hill (www.digitalengineeringlibrary.com)
Copyright © 2004 The McGraw-Hill Companies. All rights reserved.
Any use is subject to the Terms of Use as given at the website.

CONOCOPHILLIPS REDUCED VOLATILITY ALKYLATION PROCESS (ReVAP)

unwanted by-products, and possible lower octane number of the alkylate product. One feed treatment to remove butadiene is hydroisomerization, such as the ConocoPhillips Hydrisom Process. Hydroisomerization reduces butadiene (and pentadienes) to very low levels and also isomerizes 1-butene to cis- and trans-2-butene. The 2-butene isomers give higher-octane alkylate in the HF Alkylation Process.

Referring to the flow diagrams in Figs. 1.7.1 and 1.7.2, we see that the olefin and makeup isobutane are typically mixed and then dried. The combined olefin and makeup isobutane are mixed with the recycle isobutane and sent to the differential gravity reactor of Phillips' proprietary design. This low-pressure reactor has no moving parts, such as impellers or stirrers, nor are there any pumps to circulate the acid. The feed mixture is highly dispersed into a moving bed of liquid acid, which circulates because of the difference in density between the acid and the hydrocarbon. Total conversion of olefins to alkylate occurs very quickly.

Operating conditions in the reactor are relatively mild. The temperature will typically be about 80 to 110°F (27 to 43°C), or only 5 to 15°F (2.5 to 8°C) above the cooling-water temperature. The pressure will be only slightly above that required to maintain the hydrocarbons in the liquid phase—usually in the range of 85 to 120 lb/in^2 gage (590 to 820 kPa). Each alkylation design case is carefully studied in order to maximize heat recovery and minimize the isobutene/olefin ratio, while producing alkylate of sufficient octane quality to meet the refiner's needs. Isobutane/olefin ratios in the range of 8 : 1 to 13 : 1 are typically used.

From the reaction zone, the hydrocarbons and catalyst flow upward to the settling zone (see Fig. 1.7.3). Here, the catalyst separates as a bottom phase and flows, by gravity, on a return cycle through the acid cooler to the reaction zone, where the reaction cycle is continued. The hydrocarbon phase from the settling zone, containing propane, excess isobutane, normal butane, alkylate, and a small amount of HF, is charged to the fractionation section. Recycle isobutane, essential for favorable control of reaction mechanisms, is returned to the reactor from the fractionator either as a liquid or as a vapor. In the latter case, the latent heat of vaporization is recovered in nearby exchangers.

Propane and HF are produced overhead in the fractionator. The HF phase separates in the overhead accumulator, which is shared with the HF stripper, and is returned to the acid settler. What HF remains in the propane from the fractionator is removed in the HF stripper, separates in the overhead accumulator, and is returned to the acid settler. The propane product from the HF stripper contains traces of propyl fluoride, which are removed in the propane defluorinators. The propane stream is heated and passed over alumina to remove the fluoride, yielding primarily aluminum fluoride and water with a trace of HF. The propane is sent through the KOH treater to remove the trace of HF and then to storage. A similar set of equipment may be used to treat *n*-butane, if it is produced as a separate product stream. The *n*-butane product may be blended with gasoline for vapor pressure control.

Alkylate is produced as a bottoms product from the fractionation section. The alkylate product is suitable for blending in motor gasoline, but may require additional fractionation for use in aviation gasoline.

To regenerate the system acid, a small slipstream of acid is fed to the acid rerun column to remove the ASO. The HF is stripped from the ASO with hot isobutane. The ASO is washed in the ASO caustic washer to remove free HF, and the ASO is disposed of, typically by burning in the reboiler furnace or blending with fuel oil. Excess water is also removed from the system acid in the acid rerun column.

Auxiliary systems within the alkylation unit include

1. Relief-gas neutralizer to remove HF from gases before being sent to the refinery flare
2. Storage for anhydrous HF during periods when the unit is down for maintenance
3. A neutralizing system for surface drainage and sewer drainage in the acid area

Downloaded from Digital Engineering Library @ McGraw-Hill (www.digitalengineeringlibrary.com)
Copyright © 2004 The McGraw-Hill Companies. All rights reserved.
Any use is subject to the Terms of Use as given at the website.

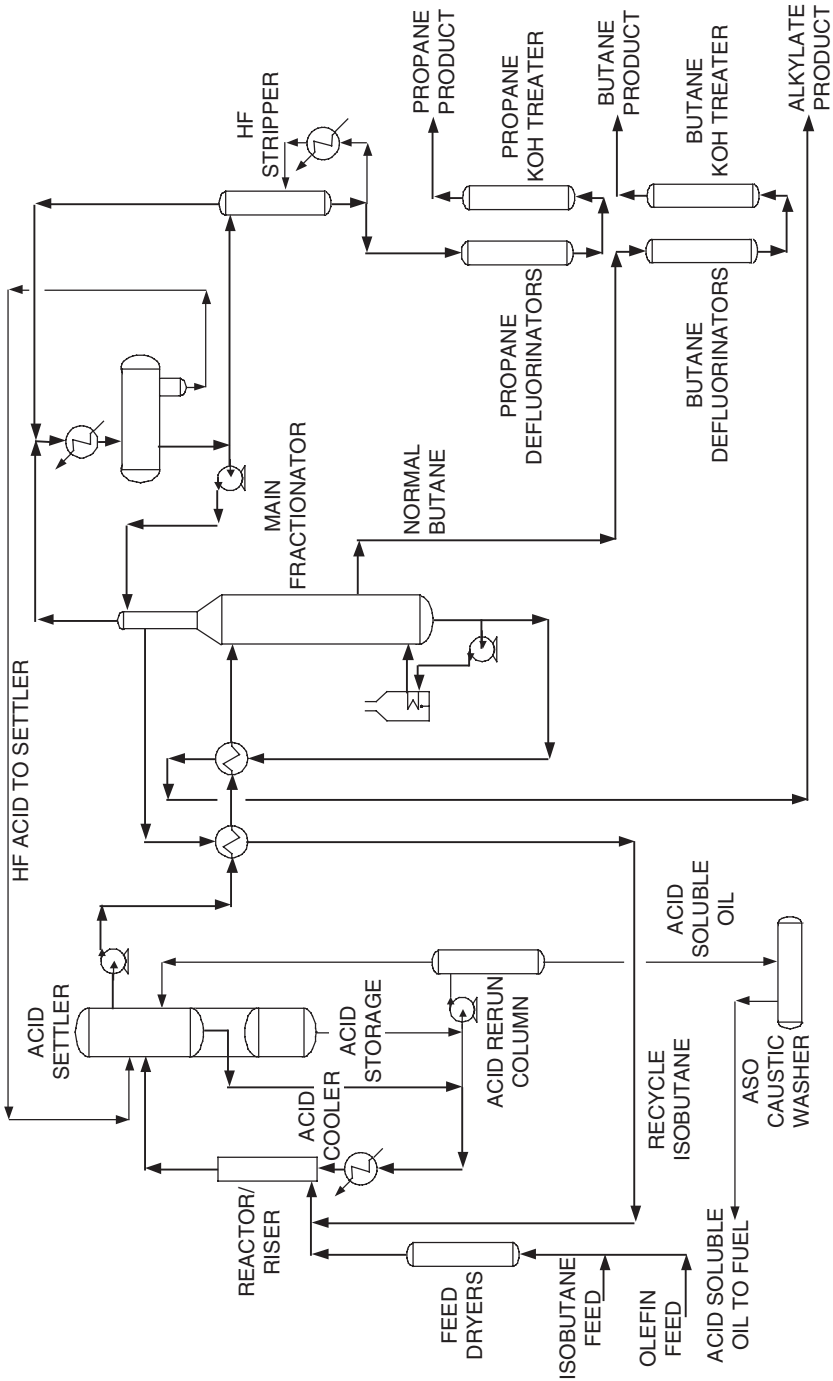

FIGURE 1.7.1 Flow diagram of the ConocoPhillips HF Alkylation process.

Downloaded from Digital Engineering Library @ McGraw-Hill (www.digitalengineeringlibrary.com)
Copyright © 2004 The McGraw-Hill Companies. All rights reserved.
Any use is subject to the Terms of Use as given at the website.

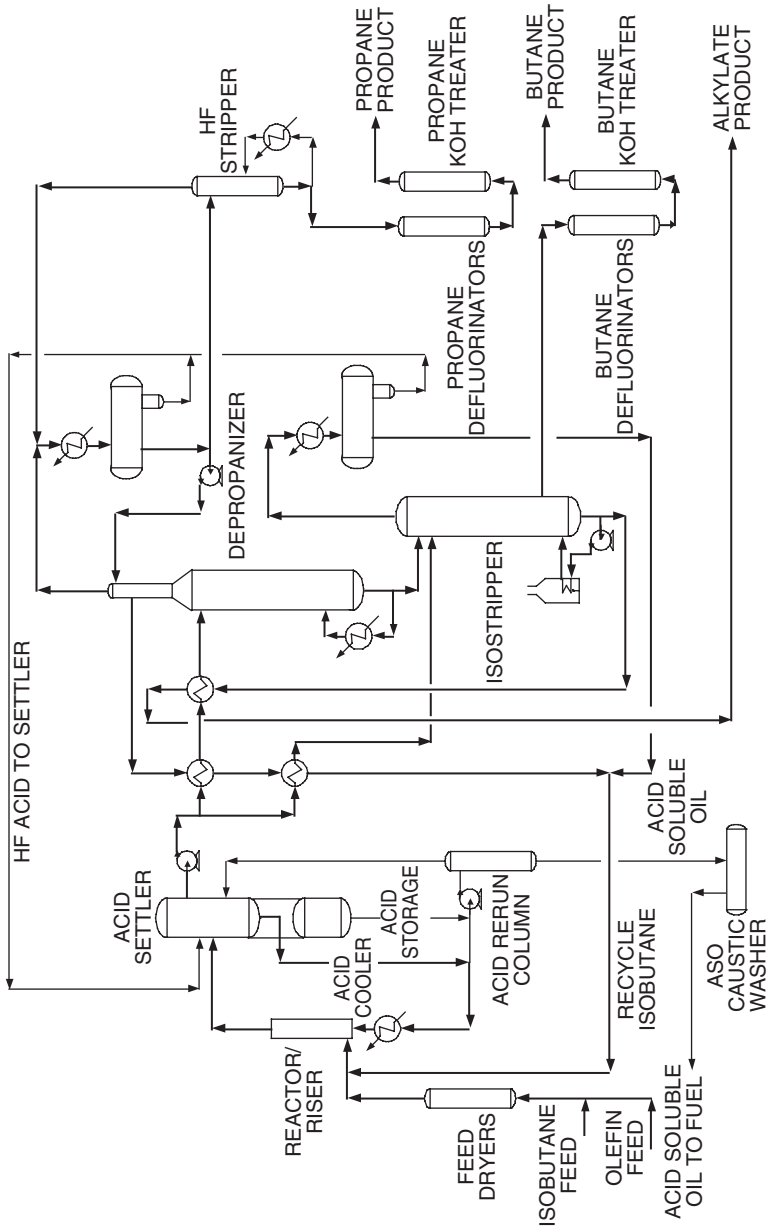

FIGURE 1.7.2 Flow diagram of the ConocoPhillips HF Alkylation process—alternate fractionation scheme.

Downloaded from Digital Engineering Library @ McGraw-Hill (www.digitalengineeringlibrary.com)
Copyright © 2004 The McGraw-Hill Companies. All rights reserved.
Any use is subject to the Terms of Use as given at the website.

CONOCOPHILLIPS REDUCED VOLATILITY ALKYLATION PROCESS (ReVAP)

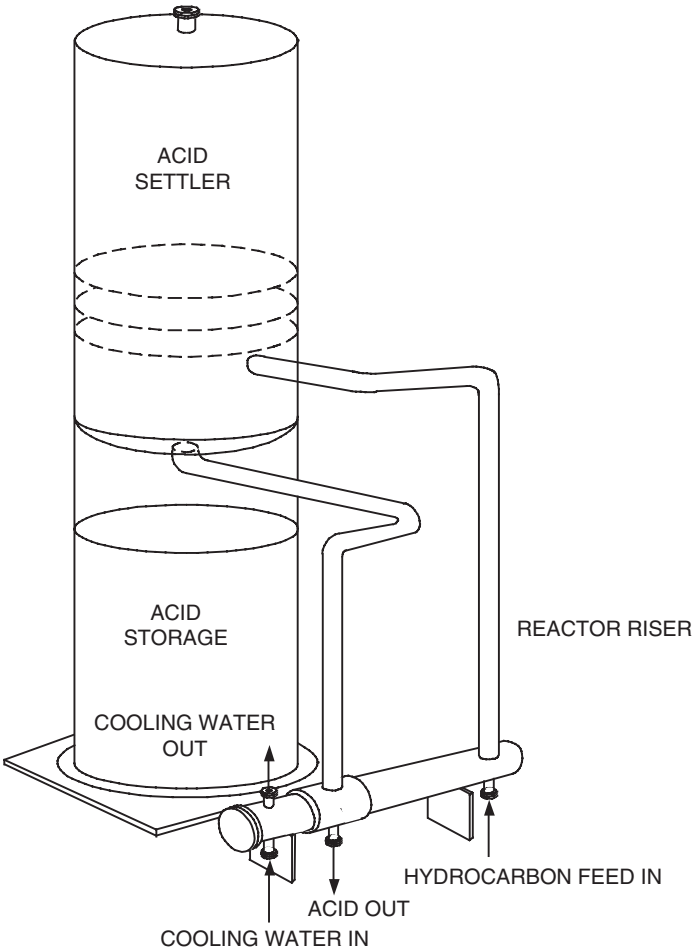

FIGURE 1.7.3 ConocoPhillips HF Alkylation reactor/settler system.

4. A change room and storage room for cleaning and storing the protective clothing required on occasion by operating and maintenance personnel
5. Wastewater treatment system to remove more than 99 percent of the soluble fluoride in the effluent water

HF Alkylation units are constructed predominately of mild carbon steel. Only the acid regeneration column and some adjacent piping are constructed of nickel-copper alloy 400 (Monel).

Other than a small centrifugal pump for charging HF to the acid rerun column, no HF pumping is required in the ConocoPhillips HF Alkylation process. HF unloading from shipping containers and HF transfers from in-plant storage are accomplished by using nitrogen or other gas under pressure.

Downloaded from Digital Engineering Library @ McGraw-Hill (www.digitalengineeringlibrary.com)
Copyright © 2004 The McGraw-Hill Companies. All rights reserved.
Any use is subject to the Terms of Use as given at the website.

CONOCOPHILLIPS REDUCED VOLATILITY ALKYLATION PROCESS (ReVAP)

WASTE TREATMENT AND DISPOSAL

Figure 1.7.4 shows the disposition of various waste streams within the alkylation unit. Nonacid gas streams are sent directly to the refinery flare system. HF-containing gases are sent first to the acid relief neutralizer, where the gases are scrubbed with an aqueous solution of sodium hydroxide for removal of HF, and then to the refinery flare. The spent caustic solutions from the acid relief neutralizer and the ASO caustic washer are sent to a mixing basin, where they are combined with calcium chloride. This mixture then flows to the precipitation basin, where the calcium fluoride precipitates out of solution. The liquid flows to the refinery wastewater system, and the solid is periodically sent to the landfill for disposal. The water from the calcium chloride precipitation system contains nominal amounts of sodium chloride and calcium chloride. Spent caustic from the KOH treaters and runoff from drains in the acid area of the plant flow to a neutralization pit and then to the refinery wastewater system. Water from nonacid drains and sewers goes directly to the refinery wastewater system.

Used alumina—containing aluminum fluoride—from the defluorinators may be returned to the alumina supplier to be converted back to alumina.

RISK REDUCTION AND SAFETY

The following principles may be used in the HF Alkylation process to minimize risk:

1. Minimize leak potential (few leak sites)
2. Minimize leak rate (i.e., minimum reactor/settler pressures)
3. Minimize leak duration
4. Minimize quantity released

One step to reduce risk is the elimination of any pumps for circulating HF catalyst through the reactor system. By eliminating rotating equipment, potential packing and seal failures associated with the equipment were eliminated, along with the dangers of frequent maintenance exposure. Without the acid pump, isolation valves were no longer required in the reactor/settler circulation system. Elimination of the acid pump allows the acid settler to operate at a minimum pressure, which minimizes the leak rate. The result is that for more than 40 years the reactor circuit design has only welded joints (built to pressure vessel codes) for joining the reactor and acid return pipes to the acid cooler and acid settler. No flanges are used to join these pipes, so these potential leak or failure sites do not exist. This is important since more than 90 percent of the HF on-site is contained in this circuit alone.

Risk is further reduced by using such features as remote isolation valves, rapid acid transfer (transfer to secure storage in less than 10 minutes), and inventory compartmentalization. For units with multiple acid coolers, the bottom portion of the acid settler is divided into compartments to reduce the amount of acid that could be released in the event of a major leak. The compartments segregate the acid in each acid cooler/reactor circuit such that the maximum amount of acid which could be released from a leak in one acid cooler or reactor section is only slightly more that that contained in each compartment. The rapid transfer of acid to secure storage is done by gravity flow; i.e., no pumping is required, and it has been accomplished in as little as 90 seconds. These features reduce risk by reducing both the duration of a leak and the amount of acid that could be emitted in the event of a leak.

Water spray mitigation systems may also be employed to improve safety. Water sprays can be used to knock down airborne HF from small leaks and, to some extent, isolate hydrocarbon leaks from ignition sources.

Downloaded from Digital Engineering Library @ McGraw-Hill (www.digitalengineeringlibrary.com)
Copyright © 2004 The McGraw-Hill Companies. All rights reserved.
Any use is subject to the Terms of Use as given at the website.

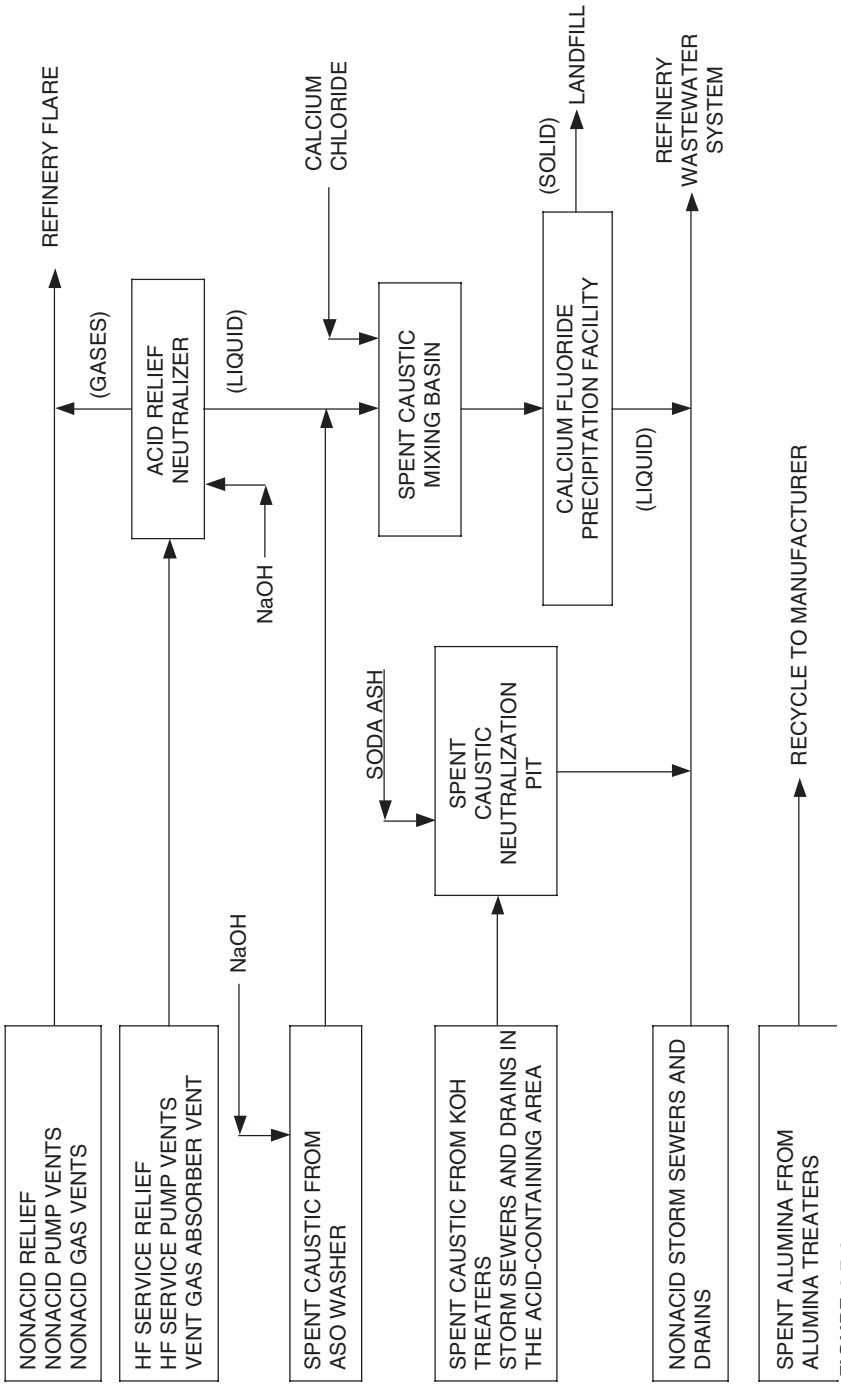

FIGURE 1.7.4 Waste disposal—ConocoPhillips HF Alkylation process.

Downloaded from Digital Engineering Library @ McGraw-Hill (www.digitalengineeringlibrary.com)
Copyright © 2004 The McGraw-Hill Companies. All rights reserved.
Any use is subject to the Terms of Use as given at the website.

CONOCOPHILLIPS REDUCED VOLATILITY ALKYLATION PROCESS (ReVAP)

A quantitative risk assessment was performed on a large (15,000 BPSD) HF Alkylation unit located in hypothetical rural and urban locations with up to 400,000 people in a 36-mi^2 area around the refinery. Risk is site-specific and cannot be easily calculated for a particular location. However, even in the highest population area studied, the current 15,000 BPSD design achieved a Societal Risk Index (SRI) of 0.098—well within the Dutch standards limit of 0.2, which is the strictest in the world. Individual risks for fatality due to being struck by a falling aircraft are said to be 10,000 times higher than the level of risk that the Dutch standard calls unacceptable. No U.S. HF alkylation site has as many people living nearby as the case where the process measured the 0.098 SRI value.

The ReVAP (for Reduced-Volatility Alkylation Process) is very similar to conventional HF Alkylation with the exception that a vapor pressure suppression additive is blended with the HF acid. Mobil Oil Corporation and Phillips Petroleum Company developed the ReVAP technology jointly in the early 1990s. Based upon bench-scale, pilot-plant, and demonstration plant tests, each company commercialized the ReVAP technology in 1997 in one of its own refineries, where the units continue to operate.

The additive is a nonvolatile, nonodorous, low-toxicity material that is completely miscible in the acid phase, but has very limited affinity to other hydrocarbons, including acid-soluble oil. These unique physical properties of the additive reduce the volatility of the acid significantly at ambient conditions. Furthermore, the additive is compatible with the metallurgy of existing HF Alkylation units.

When the additive is mixed with HF acid, it mitigates an acid leak in three ways: by (1) reducing the flash atomization of the acid, (2) reducing the vapor pressure significantly, and (3) diluting the acid. This is a passive mitigation system in that it is always effective and requires no intervention by an operator.

Traces of the additive accumulate in the heavier unit products of ASO and alkylate. The ASO is removed from the system acid in the acid rerun column in the normal manner. The ASO is then sent to a simple and efficient recovery system where the ASO and additive are separated. The additive is returned to the reactor, and the ASO is sent to the ASO caustic washer and treated in the normal manner. Additive is separated from alkylate, recovered, and returned to the reactor. Figure 1.7.5 indicates the modifications required in an existing HF Alkylation unit to convert to the ReVAP technology.

The ReVAP technology has the added benefit of reducing the consumption of HF and caustic, relative to the conventional HF Alkylation process. ReVAP increases the efficiency of separation of ASO and HF, thus reducing the loss of HF, which translates to lower caustic consumption as well.

YIELD AND PRODUCT PROPERTIES

Based on processing typical butenes produced by fluid catalytic cracking (FCC) and supplemental isobutane, Tables 1.7.1 and 1.7.2 give the premises for ConocoPhillips HF Alkylation process economics for a unit with the ReVAP technology producing 6000 bbl/day of alkylate.

ECONOMICS

The estimated capital cost for a plant producing 6000 bbl/day of alkylate indicated in the above material balance, utilizing the flow scheme in Fig. 1.7.1, including the auxiliary systems indicated in the section "Description of ConocoPhillips HF Alkylation Process," with the ReVAP technology is $24.8 million. This cost is for a U.S. Gulf Coast location, second quarter, 2002. Initial catalyst cost, royalty, escalation, and contingency have been excluded.

Downloaded from Digital Engineering Library @ McGraw-Hill (www.digitalengineeringlibrary.com)
Copyright © 2004 The McGraw-Hill Companies. All rights reserved.
Any use is subject to the Terms of Use as given at the website.

CONOCOPHILLIPS REDUCED VOLATILITY ALKYLATION PROCESS (ReVAP)

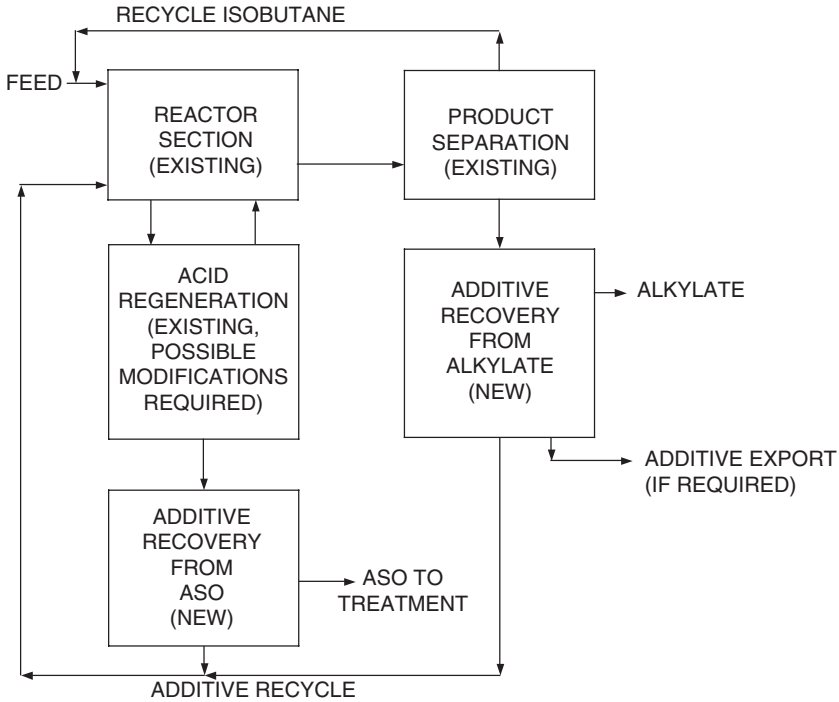

FIGURE 1.7.5 Modifications for adding ReVAP to an existing HF Alkylation unit.

Table 1.7.1 Material Balance, BPSD

Component	Olefin feed	Makeup isobutene	Propane product	Butane product	Alkylate product	Acid-soluble oil
Propylene	153	0	0	0	0	0
Propane	115	7	146	0	0	0
Isobutane	2380	1446	2	38	0	0
n-Butane	702	37	0	571	168	0
Butenes	3068	0	0	0	0	0
1,3-Butadiene	20	0	0	0	0	0
Pentenes	56	0	0	0	0	0
Pentanes	2	0	0	26	42	0
Alkylate	0	0	0	0	5790	0
Acid-soluble oil	0	0	0	0	0	8
Total	6496	1490	148	635	6000	8

Downloaded from Digital Engineering Library @ McGraw-Hill (www.digitalengineeringlibrary.com)
Copyright © 2004 The McGraw-Hill Companies. All rights reserved.
Any use is subject to the Terms of Use as given at the website.

CONOCOPHILLIPS REDUCED VOLATILITY ALKYLATION PROCESS (ReVAP)

Table 1.7.2 Product Properties

Specific gravity at 15°C	0.70
Reid vapor pressure, lb/in^2	5.0
Research octane number, clear	95.6
Motor octane number, clear	94.1
Olefin	0
Sulfur	<5 wt ppm
ASTM D-86 Distillation, °F	
Initial boiling point	104
10	176
50	212
90	257
Final boiling point	383

Estimated Utilities Consumptions (Fig. 1.7.1 Flow Scheme), per 1000 bbl of Alkylate, Including ReVAP Technology

Electricity (operating), kW	77.4
Cooling water, million Btu	15.1
Low-pressure steam (50 lb/in^2 gage), million Btu	0.6
Medium-pressure steam (170 lb/in^2 gage), million Btu	1.4
Fuel gas (absorbed), million Btu	10.0

Estimated Chemicals Consumptions, per 1000 bbl of Alkylate

Anhydrous HF, lb	70–100
NaOH, lb	47
KOH, lb	9.3
$CaCl_2$, lb	79
Defluorinator alumina, lb	11
ReVAP additive (if used), lb	4

Maintenance and Labor Costs

Operating labor	2 persons per shift
Laboratory labor	1 person per day (8 h)
Maintenance (materials plus labor)	3% of investment per year

Downloaded from Digital Engineering Library @ McGraw-Hill (www.digitalengineeringlibrary.com)
Copyright © 2004 The McGraw-Hill Companies. All rights reserved.
Any use is subject to the Terms of Use as given at the website.

CONOCOPHILLIPS REDUCED VOLATILITY ALKYLATION PROCESS (ReVAP)

BIBLIOGRAPHY

Hutson, Jr., Thomas, and Richard S. Logan: "Estimate Alky Yield and Quality," *Hydrocarbon Processing,* September 1975, pp. 107–110.

Lew, Lawrence E., Martyn E. Pfile, and Larry W. Shoemaker: "Meet the Greater Demand for High Octane Blending Agents with HF Alkylation," *Fuel Reformulation,* March/April 1994.

Randolph, Bruce B., and Keith W. Hovis: ReVAP: "Reduced Volatility Alkylation for Production of High Value Alkylate Blendstock: Year 4," NPRA Annual Meeting, Mar. 17–19, 2002, San Antonio, Tex., Paper AM-02-20.

Downloaded from Digital Engineering Library @ McGraw-Hill (www.digitalengineeringlibrary.com)
Copyright © 2004 The McGraw-Hill Companies. All rights reserved.
Any use is subject to the Terms of Use as given at the website.

Source: HANDBOOK OF PETROLEUM REFINING PROCESSES

P · A · R · T · 2

BASE AROMATICS PRODUCTION PROCESSES

Downloaded from Digital Engineering Library @ McGraw-Hill (www.digitalengineeringlibrary.com)
Copyright © 2004 The McGraw-Hill Companies. All rights reserved.
Any use is subject to the Terms of Use as given at the website.

Downloaded from Digital Engineering Library @ McGraw-Hill (www.digitalengineeringlibrary.com)
Copyright © 2004 The McGraw-Hill Companies. All rights reserved.
Any use is subject to the Terms of Use as given at the website.

Source: HANDBOOK OF PETROLEUM REFINING PROCESSES

CHAPTER 2.1
AROMATICS COMPLEXES

James A. Johnson
UOP
Des Plaines, Illinois

INTRODUCTION

An aromatics complex is a combination of process units that can be used to convert petroleum naphtha and pyrolysis gasoline (pygas) into the basic petrochemical intermediates: benzene, toluene, and xylenes (BTX). Benzene is a versatile petrochemical building block used in the production of more than 250 different products. The most important benzene derivatives are ethylbenzene, cumene, and cyclohexane (Fig. 2.1.1). The xylenes product, also known as *mixed xylenes,* contains four different C_8 aromatic isomers: *para*-xylene, *ortho*-xylene, *meta*-xylene, and ethylbenzene. Small amounts of mixed xylenes are used for solvent applications, but most xylenes are processed further within the complex to produce one or more of the individual isomers. The most important C_8 aromatic isomer is *para*-xylene, which is used almost exclusively for the production of polyester fibers,

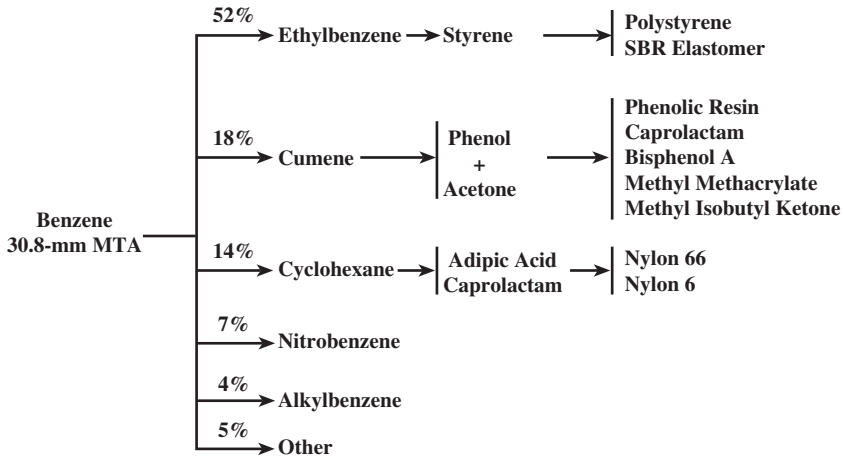

FIGURE 2.1.1 World benzene consumption, 2001.

Downloaded from Digital Engineering Library @ McGraw-Hill (www.digitalengineeringlibrary.com)
Copyright © 2004 The McGraw-Hill Companies. All rights reserved.
Any use is subject to the Terms of Use as given at the website.

resins, and films (Fig. 2.1.2). In recent years, polyester fibers have shown growth rates of 5 to 6 percent per year as synthetics are substituted for cotton. Resins have shown growth rates of 10 to 15 percent per year, corresponding to the emergence of PET (polyethylene terephthalate) containers. Note that benzene can be a significant by-product of *para*-xylene production, depending on the type of technology being used. A small amount of toluene is recovered for use in solvent applications and derivatives, but most toluene is used to produce benzene and xylenes. Toluene is becoming increasingly important for the production of xylenes through toluene disproportionation and transalkylation with C_9 aromatics.

CONFIGURATIONS

Aromatics complexes can have many different configurations. The simplest complex produces only benzene, toluene, and mixed xylenes (Fig. 2.1.3) and consists of the following major process units:

- *Naphtha hydrotreating* for the removal of sulfur and nitrogen contaminants
- *Catalytic reforming* for the production of aromatics from naphtha
- *Aromatics extraction* for the extraction of BTX

Most new aromatics complexes are designed to maximize the yield of benzene and *para*-xylene and sometimes *ortho*-xylene. The configuration of a modern, integrated

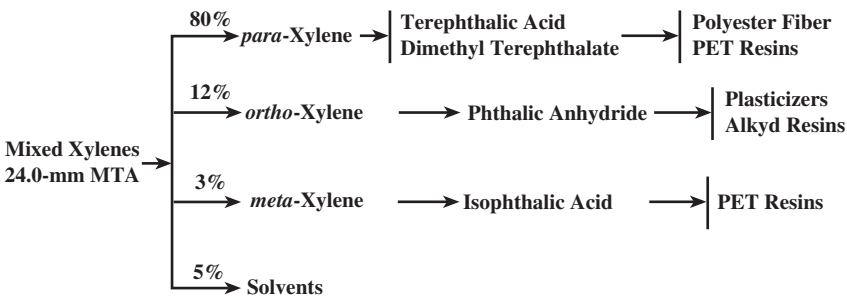

FIGURE 2.1.2 World xylenes consumption, 1999.

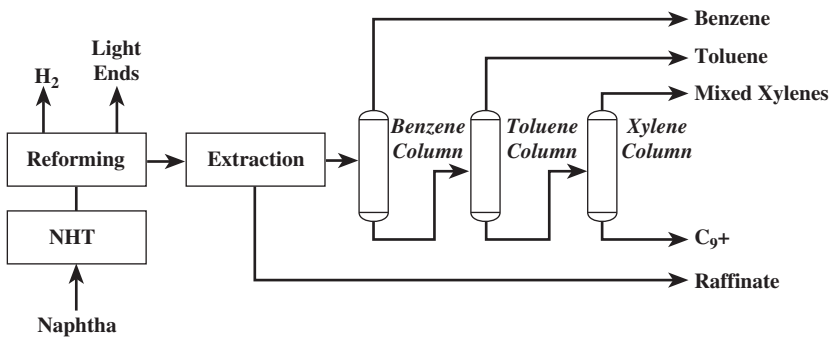

FIGURE 2.1.3 Simple aromatics complex.

Downloaded from Digital Engineering Library @ McGraw-Hill (www.digitalengineeringlibrary.com)
Copyright © 2004 The McGraw-Hill Companies. All rights reserved.
Any use is subject to the Terms of Use as given at the website.

ARMATICS COMPLEXES

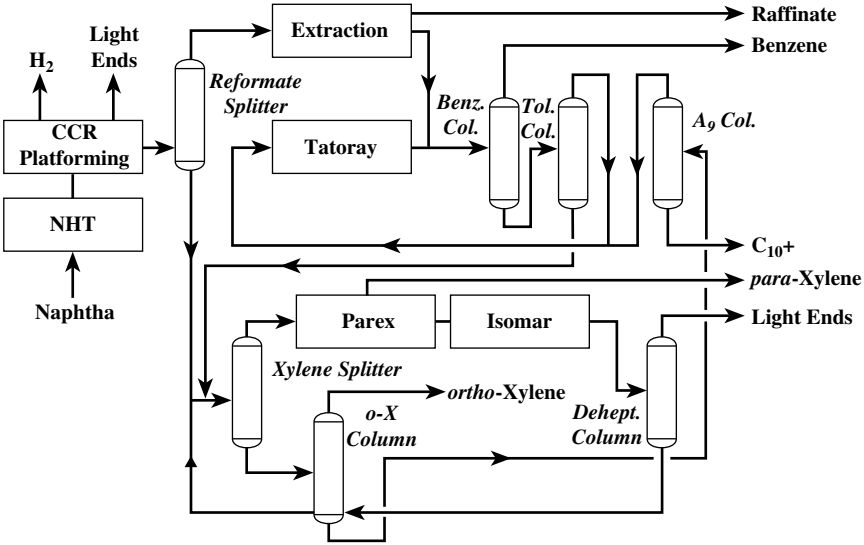

FIGURE 2.1.4 Integrated UOP aromatics complex.

UOP* aromatics complex is shown in Fig. 2.1.4. This complex has been configured for maximum yield of benzene and *para*-xylene and includes the following UOP process technologies:

- *CCR Platforming** for the production of aromatics from naphtha at high severity
- *Sulfolane,** Carom, on extractive distillation for the recovery of benzene and toluene
- *Parex** for the recovery of *para*-xylene by continuous adsorptive separation
- *Isomar** for the isomerization of xylenes and the conversion of ethylbenzene
- *Tatoray* for the conversion of toluene and heavy aromatics to xylenes and benzene

The Tatoray process is used to produce additional xylenes and benzene by toluene disproportionation and transalkylation of toluene plus C_9 aromatics. The incorporation of a Tatoray unit into an aromatics complex can more than double the yield of *para*-xylene from a given amount of naphtha feedstock. Thus, the Tatoray process is used when *para*-xylene is the principal product. If there is significant need for benzene production, it can be achieved by adjusting the boiling range of the naphtha feed to include more benzene and toluene precursors. In such cases, technologies such as PX-Plus* or even thermal hydrodealkylation (THDA) can be used to maximize benzene production. The cost of production is highest for THDA, so it is being used only in situations where benzene supply is scarce. Detailed descriptions of each of these processes are in Chaps. 2.7 and 2.3.

About one-half of the existing UOP aromatics complexes are configured for the production of both *para*-xylene and *ortho*-xylene. Figure 2.1.4 shows an *ortho*-Xylene (*o*-X) column for recovery of *ortho*-xylene by fractionation. If *ortho*-xylene production is not required, the *o*-X column is deleted from the configuration, and all the C_8 aromatic isomers are recycled through the Isomar unit until they are recovered as *para*-xylene. In those com-

*Trademark and/or service mark of UOP.

Downloaded from Digital Engineering Library @ McGraw-Hill (www.digitalengineeringlibrary.com)
Copyright © 2004 The McGraw-Hill Companies. All rights reserved.
Any use is subject to the Terms of Use as given at the website.

plexes that do produce *ortho*-xylene, the ratio of *ortho*-xylene to *para*-xylene production is usually in the range of 0.2 to 0.6.

The *meta*-xylene market is currently small but is growing rapidly. The *meta*-xylene is converted to isophthalic acid and, along with terephthalic acid derived from *para*-xylene, is converted into PET resin blends for solid-state polymerization (SSP). The demand for PET resin blends has grown significantly during the last decade, as new food and beverage bottling and packaging applications have been developed. In 1995, UOP licensed the first MX Sorbex* unit for the production of *meta*-xylene by continuous adsorptive separation. Although similar in concept and operation to the Parex process, the MX Sorbex process selectively recovers the *meta* rather than the *para* isomer from a stream of mixed xylenes. An MX Sorbex unit can be used alone, or it can be incorporated into an aromatics complex that also produces *para*-xylene and *ortho*-xylene.

An aromatics complex may be configured in many different ways, depending on the available feedstocks, the desired products, and the amount of investment capital available. This range of design configurations is illustrated in Fig. 2.1.5. Each set of bars in Fig. 2.1.5 represents a different configuration of an aromatics complex processing the same full-range blend of straight-run and hydrocracked naphtha. The configuration options include whether a Tatoray or THDA unit is included in the complex, whether C_9 aromatics are recycled for conversion to benzene or xylenes, and what type of Isomar catalyst is used. The xylene/benzene ratio can also be manipulated by prefractionating the naphtha to remove benzene or C_9+ aromatic precursors (see the section of this chapter on feedstock considerations). Because of this wide flexibility in the design of an aromatics complex, the product slate can be varied to match downstream processing requirements. By the proper choice of configuration, the xylene/benzene product ratio from an aromatics complex can be varied from about 0.6 to 3.8.

*Trademark and/or service mark of UOP.

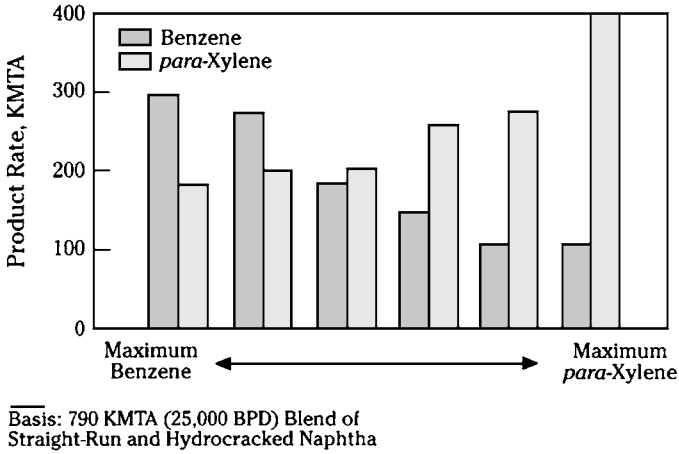

FIGURE 2.1.5 Product slate flexibility.

Downloaded from Digital Engineering Library @ McGraw-Hill (www.digitalengineeringlibrary.com)
Copyright © 2004 The McGraw-Hill Companies. All rights reserved.
Any use is subject to the Terms of Use as given at the website.

AROMATICS COMPLEXES

DESCRIPTION OF THE PROCESS FLOW

The principal products from the aromatics complex illustrated in Fig. 2.1.4 are benzene, *para*-xylene, and *ortho*-xylene. If desired, a fraction of the toluene and C_9 aromatics may be taken as products, or some of the reformate may be used as a high-octane gasoline blending component. The naphtha is first hydrotreated to remove sulfur and nitrogen compounds and then sent to a CCR Platforming unit, where paraffins and naphthenes are converted to aromatics. This unit is the only one in the complex that actually creates aromatic rings. The other units in the complex separate the various aromatic components into individual products and convert undesired aromatics into additional high-value products. The CCR Platforming unit is designed to run at high severity, 104 to 106 research octane number, clear (RONC), to maximize the production of aromatics. This high-severity operation also extinguishes virtually all nonaromatic impurities in the C_8+ fraction of the reformate, thus eliminating the need for extraction of the C_8 and C_9 aromatics. The reformate product from the CCR Platforming unit is sent to a debutanizer column within the Platforming unit to strip off the light ends.

The reformate from the CCR Platforming unit is sent to a reformate splitter column. The C_7- fraction from the overhead is sent to the Sulfolane unit for extraction of benzene and toluene. The C_8+ fraction from the bottom of the reformate splitter is clay-treated and then sent directly to the xylene recovery section of the complex.

The Sulfolane unit extracts the aromatics from the reformate splitter overhead and rejects a paraffinic raffinate stream. The aromatic extract is clay-treated to remove trace olefins. Then individual high-purity benzene and toluene products are recovered in the benzene-toluene (BT) fractionation section of the complex. The C_8+ material from the bottom of the toluene column is sent to the xylene recovery section of the complex. The raffinate from the Sulfolane unit may be further refined into paraffinic solvents, blended into gasoline, used as feedstock for an ethylene plant, or converted to additional benzene by an RZ-100* Platforming unit.

Toluene is usually blended with C_9 and C_{10} aromatics (A_9+) from the overhead of the A_9 column and charged to a Tatoray unit for the production of additional xylenes and benzene. The effluent from the Tatoray unit is sent to a stripper column within the Tatoray unit to remove light ends. After the effluent is clay-treated, it is sent to the BT fractionation section, where the benzene product is recovered and the xylenes are fractionated out and sent to the xylene recovery section. The overhead material from the Tatoray stripper or THDA stripper column is separated into gas and liquid products. The overhead gas is exported to the fuel gas system, and the overhead liquid is normally recycled to the CCR Platforming debutanizer for recovery of residual benzene.

Instead of feeding the toluene to Tatoray, another processing strategy for toluene is to feed it to a *para*-selective catalytic process such as PX-Plux, where the *para*-xylene in the xylene product is enriched to >85% and cyclohexane-grade benzene is coproduced. The concentrated *para*-xylene product could then be easily recovered in a single-stage crystallization unit. In such a case, the C_9+ aromatics could be fed to a Toray TAC9 unit and converted predominantly to mixed xylenes.

The C_8+ fraction from the bottom of the reformate splitter is clay-treated and then charged to a xylene splitter column. The xylene splitter is designed to rerun the mixed xylenes feed to the Parex unit down to very low levels of A_9 concentration. The A_9 builds up in the desorbent circulation loop within the Parex unit, and removing this material upstream in the xylene splitter is more efficient. The overhead from the xylene splitter is charged directly to the Parex unit. The bottoms are sent to the A_9 column, where the A_9 fraction is rerun and then recycled to the Tatoray or THDA unit. If the complex has no Tatoray or THDA unit, the A_9+ material is usually blended into gasoline or fuel oil.

*Trademark and/or service mark of UOP.

Downloaded from Digital Engineering Library @ McGraw-Hill (www.digitalengineeringlibrary.com)
Copyright © 2004 The McGraw-Hill Companies. All rights reserved.
Any use is subject to the Terms of Use as given at the website.

AROMATICS COMPLEXES

If *ortho*-xylene is to be produced in the complex, the xylene splitter is designed to make a split between *meta*- and *ortho*-xylene and drop a targeted amount of *ortho*-xylene to the bottoms. The xylene splitter bottoms are then sent to an *o*-X column where high-purity *ortho*-xylene product is recovered overhead. The bottoms from the *o*-X column are then sent to the A_9 column.

The xylene splitter overhead is sent directly to the Parex unit, where 99.9 wt % pure *para*-xylene is recovered by adsorptive separation at 97 wt % recovery per pass. Any residual toluene in the Parex feed is extracted along with the *para*-xylene, fractionated out in the finishing column within the Parex unit, and then recycled to the Tatoray or THDA unit. The raffinate from the Parex unit is almost entirely depleted of *para*-xylene, to a level of less than 1 wt %. The raffinate is sent to the Isomar unit, where additional *para*-xylene is produced by reestablishing an equilibrium distribution of xylene isomers. Any ethylbenzene in the Parex raffinate is either converted to additional xylenes or dealkylated to benzene, depending on the type of Isomar catalyst used. The effluent from the Isomar unit is sent to a deheptanizer column. The bottoms from the deheptanizer are clay-treated and recycled back to the xylene splitter. In this way, all the C_8 aromatics are continually recycled within the xylene recovery section of the complex until they exit the aromatics complex as *para*-xylene, *ortho*-xylene, or benzene. The overhead from the deheptanizer is split into gas and liquid products. The overhead gas is exported to the fuel gas system, and the overhead liquid is normally recycled to the CCR Platforming debutanizer for recovery of residual benzene.

Within the aromatics complex, numerous opportunities exist to reduce overall utility consumption through heat integration. Because distillation is the major source of energy consumption in the complex, the use of cross-reboiling is especially effective. This technique involves raising the operating pressure of one distillation column until the condensing distillate is hot enough to serve as the heat source for the reboiler of another column. In most aromatics complexes, the overhead vapors from the xylene splitter are used to reboil the desorbent recovery columns in the Parex unit. The xylene splitter bottoms are often used as a hot-oil belt to reboil either the Isomar deheptanizer or the Tatoray stripper column. If desired, the convection section of many fired heaters can be used to generate steam.

FEEDSTOCK CONSIDERATIONS

Any of the following streams may be used as feedstock to an aromatics complex:

- Straight-run naphtha
- Hydrocracked naphtha
- Mixed xylenes
- Pyrolysis gasoline (pygas)
- Coke-oven light oil
- Condensate
- Liquid petroleum gas (LPG)

Petroleum naphtha is by far the most popular feedstock for aromatics production. Reformed naphtha, or reformate, accounts for 70 percent of total world BTX supply. The pygas by-product from ethylene plants is the next-largest source at 23 percent. Coal liquids from coke ovens account for the remaining 7 percent. Pygas and coal liquids are important sources of benzene that may be used only for benzene production or may be combined with reformate and fed to an integrated aromatics complex. Mixed xylenes are also actively traded and can be used to feed a stand-alone Parex-Isomar loop or to provide supplemental feedstock for an integrated complex.

Downloaded from Digital Engineering Library @ McGraw-Hill (www.digitalengineeringlibrary.com)
Copyright © 2004 The McGraw-Hill Companies. All rights reserved.
Any use is subject to the Terms of Use as given at the website.

AROMATICS COMPLEXES

Condensate is a large source of potential feedstock for aromatics production. Although most condensate is currently used as cracker feedstock to produce ethylene, condensate will likely play an increasingly important role in aromatics production in the future.

Many regions of the world have a surplus of low-priced LPG that could be transformed into aromatics by using the new UOP-BP Cyclar* process. In 1999 the first Cyclar-based aromatics complex started up in Saudi Arabia. This Cyclar unit is integrated with a downstream aromatics complex to produce *para*-xylene, *ortho*-xylene, and benzene.

Pygas composition varies widely with the type of feedstock being cracked in an ethylene plant. Light cracker feeds such as liquefied natural gas (LNG) produce a pygas that is rich in benzene but contains almost no C_8 aromatics. Substantial amounts of C_8 aromatics are found only in pygas from ethylene plants cracking naphtha and heavier feedstocks. All pygas contains significant amounts of sulfur, nitrogen, and dienes that must be removed by two-stage hydrotreating before being processed in an aromatics complex.

Because reformate is much richer in xylenes than pygas, most *para*-xylene capacity is based on reforming petroleum naphtha. Straight-run naphtha is the material that is recovered directly from crude oil by simple distillation. Hydrocracked naphtha, which is produced in the refinery by cracking heavier streams in the presence of hydrogen, is rich in naphthenes and makes an excellent reforming feedstock but is seldom sold on the merchant market. Straight-run naphthas are widely available in the market, but the composition varies with the source of the crude oil. Straight-run naphthas must be thoroughly hydrotreated before being sent to the aromatics complex, but this pretreatment is not as severe as that required for pygas. The CCR Platforming units used in BTX service are run at a high-octane severity, typically 104 to 106 RONC, to maximize the yield of aromatics and eliminate the nonaromatic impurities in the C_8+ fraction of the reformate.

Naphtha is characterized by its distillation curve. The *cut* of the naphtha describes which components are included in the material and is defined by the initial boiling point (IBP) and endpoint (EP) of the distillation curve. A typical BTX cut has an IBP of 75°C (165°F) and an EP of 150°C (300°F). However, many aromatics complexes tailor the cut of the naphtha to fit their particular processing requirements.

An IBP of 75 to 80°C (165 to 175°F) maximizes benzene production by including all the precursors that form benzene in the reforming unit. Prefractionating the naphtha to an IBP of 100 to 105°C (210 to 220°F) minimizes the production of benzene by removing the benzene precursors from the naphtha.

If a UOP Tatoray unit is incorporated into the aromatics complex, C_9 aromatics become a valuable source of additional xylenes. A heavier naphtha with an EP of 165 to 170°C (330 to 340°F) maximizes the C_9 aromatic precursors in the feed to the reforming unit and results in a substantially higher yield of xylenes or *para*-xylene from the complex. Without a UOP Tatoray unit, C_9 aromatics are a low-value by-product from the aromatics complex that must be blended into gasoline or fuel oil. In this case, a naphtha EP of 150 to 155°C (300 to 310°F) is optimum because it minimizes the C_9 aromatic precursors in the reforming unit feed. If mixed xylenes are purchased as feedstock for the aromatics complex, they must be stripped, clay-treated, and rerun prior to being processed in the Parex-Isomar loop.

CASE STUDY

An overall material balance for a typical aromatics complex is shown in Table 2.1.1 along with the properties of the naphtha feedstock used to prepare the case. The feedstock is a common straight-run naphtha derived from Arabian Light crude. The configuration of the aromatics complex for this case is the same as that shown in Fig. 2.1.4 except that the *o*-X column has been omitted from the complex to maximize the production of *para*-xylene.

*Trademark and/or service mark of UOP.

Downloaded from Digital Engineering Library @ McGraw-Hill (www.digitalengineeringlibrary.com)
Copyright © 2004 The McGraw-Hill Companies. All rights reserved.
Any use is subject to the Terms of Use as given at the website.

AROMATICS COMPLEXES

The naphtha has been cut at an endpoint of 165°C (330°F) to include all the C_9 aromatic precursors in the feed to the Platforming unit.

A summary of the investment cost and utility consumption for this complex is shown in Table 2.1.2. The estimated erected cost for the complex assumes construction on a U.S. Gulf Coast site in 1995. The scope of the estimate is limited to equipment inside the battery limits of each process unit and includes engineering, procurement, erection of equipment on the site, and the cost of initial catalyst and chemical inventories. The light-ends by-product from the aromatics complex has been shown in the overall material balance. The fuel value of these light ends has not been credited against the fuel requirement for the complex.

COMMERCIAL EXPERIENCE

UOP is the world's leading licenser of aromatics technology. By 2002, UOP had licensed nearly 600 separate process units for aromatics production, including 168 CCR Platformers, 215 extraction units (Udex,* Sulfolane, Tetra,* and Carom*), 78 Parex units,

*Trademark and/or service mark of UOP.

TABLE 2.1.1 Overall Material Balance

Naphtha feedstock properties	
Specific gravity	0.7347
Initial boiling point, °C (°F)	83 (181)
Endpoint, °C (°F)	166 (331)
Paraffins/naphthenes/aromatics, vol %	66/23/11
Overall material balance, kMTA*	
Naphtha	940
Products:	
Benzene	164
para-Xylene	400
C_{10}+ aromatics	50
Sulfolane raffinate	140
Hydrogen-rich gas	82
LPG	68
Light ends	36

*MTA = metric tons per annum.

TABLE 2.1.2 Investment Cost and Utility Consumption

Estimated erected cost, million $ U.S.	235
Utility consumption:	
Electric power, kW	12,000
High-pressure steam, MT/h* (klb/h)	63 (139)
Medium-pressure steam, MT/h (klb/h)	76 (167)
Cooling water, m^3/h (gal/min)	1630 (7180)
Fuel fired, million kcal/h (million Btu/h)	207 (821)

*MT/h = metric tons per hour

Downloaded from Digital Engineering Library @ McGraw-Hill (www.digitalengineeringlibrary.com)
Copyright © 2004 The McGraw-Hill Companies. All rights reserved.
Any use is subject to the Terms of Use as given at the website.

AROMATICS COMPLEXES

6 MX Sorbex units, 52 Isomar units, 41 Tatoray units, 38 THDA units, and 1 Cyclar unit. UOP has designed over 60 integrated aromatics complexes, which produce both benzene and *para*-xylene. These complexes range in size from 21,000 to 1,200,000 MTA (46 to 2646 million lb) of *para*-xylene.

BIBLIOGRAPHY

Jeanneret, J. J.: "Developments in *p*-Xylene Technology," *DeWitt Petrochemical Review,* Houston, March 1993.

Jeanneret, J. J.: "*para*-Xylene Production in the 1990s," UOP Technology Conferences, various locations, May 1995.

Jeanneret, J. J., C. D. Low, and V. Zukauskas: "New Strategies Maximize *para*-Xylene Production," *Hydrocarbon Processing,* June 1994.

Downloaded from Digital Engineering Library @ McGraw-Hill (www.digitalengineeringlibrary.com)
Copyright © 2004 The McGraw-Hill Companies. All rights reserved.
Any use is subject to the Terms of Use as given at the website.

Downloaded from Digital Engineering Library @ McGraw-Hill (www.digitalengineeringlibrary.com)
Copyright © 2004 The McGraw-Hill Companies. All rights reserved.
Any use is subject to the Terms of Use as given at the website.

Source: HANDBOOK OF PETROLEUM REFINING PROCESSES

CHAPTER 2.2
UOP SULFOLANE PROCESS

Thomas J. Stoodt and Antoine Negiz
Marketing Services
UOP LLC
Des Plaines, Illinois

INTRODUCTION

The UOP Sulfolane* process is used to recover high-purity aromatics from hydrocarbon mixtures, such as reformed petroleum naphtha (reformate), pyrolysis gasoline (pygas), or coke-oven light oil.

The Sulfolane process takes its name from the solvent used: tetrahydrothiophene 1,1-dioxide, or Sulfolane. Sulfolane was developed as a solvent by Shell in the early 1960s and is still the most efficient solvent available for the recovery of aromatics. Since 1965, UOP has been the exclusive licensing agent for the Sulfolane process. Many of the process improvements incorporated in a modern Sulfolane unit are based on design features and operating techniques developed by UOP.

The Sulfolane process can be applied as a combination of liquid-liquid extraction (LLE) and extractive distillation (ED) or, with an appropriate feed, ED alone. The choice is a function of the feedstock and the processing objectives, as explained below.

The Sulfolane process is usually incorporated in an aromatics complex to recover high-purity benzene and toluene products from reformate. In a modern, fully integrated UOP aromatics complex (Fig. 2.2.1), the Sulfolane unit is located downstream of the reformate splitter column. The C_6-C_7 fraction from the overhead of the reformate splitter is fed to the Sulfolane unit. The aromatic extract from the Sulfolane unit is clay-treated to remove trace olefins, and individual benzene and toluene products are recovered by simple fractionation. The paraffinic raffinate from the Sulfolane unit is usually blended into the gasoline pool or used in aliphatic solvents. A complete description of the entire aromatics complex may be found in Chap. 2.1.

The Sulfolane process can also be an attractive way to reduce the benzene concentration in a refinery's gasoline pool so that it meets new reformulated gasoline requirements. In a typical benzene-reduction application (Fig. 2.2.2), a portion of the debutanized reformate is sent to a reformate splitter column. The amount of reformate sent to the splitter is determined by the degree of benzene reduction required. Bypassing some reformate around the splitter and recombining it with splitter bottoms provide control of the final benzene concentration. The benzene-rich splitter overhead is sent to the Sulfolane unit,

*Trademark and/or service mark of UOP.

Downloaded from Digital Engineering Library @ McGraw-Hill (www.digitalengineeringlibrary.com)
Copyright © 2004 The McGraw-Hill Companies. All rights reserved.
Any use is subject to the Terms of Use as given at the website.

UOP SULFOLANE PROCESS

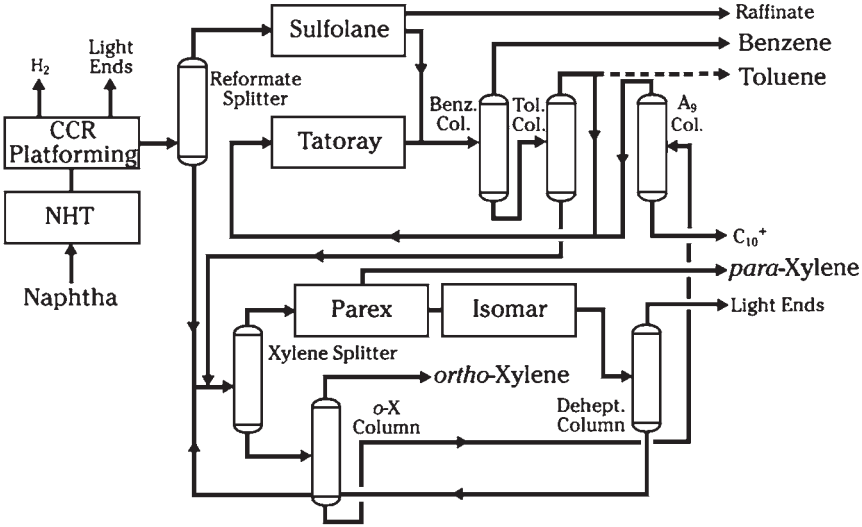

FIGURE 2.2.1 Integrated UOP aromatics complex.

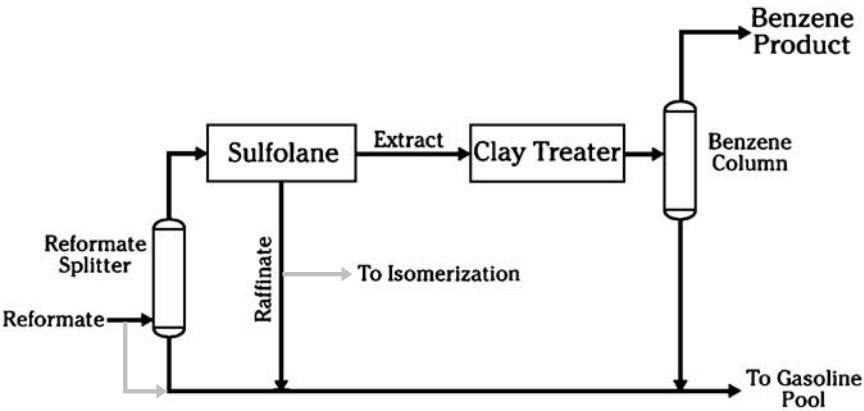

FIGURE 2.2.2 Benzene-reduction application.

which produces a high-purity benzene product that can be sold to the petrochemical market. The raffinate from the Sulfolane unit can be blended back into the gasoline pool or upgraded in an isomerization unit.

Improvements in the Sulfolane process have allowed the application of extractive distillation alone to feeds that have traditionally been sent to a combination LLE/ED unit. For the same feed rate, an extractive distillation unit is about 80 percent of the installed cost of a combined LLE/ED unit. The economics of one versus the other is largely a question of the utilities required to achieve the high-purity product specifications at satisfactory recoveries of BTX. The application of extractive distillation is favored when the Sulfolane feed is rich in aromatics. In such a case, there is less raffinate to boil overhead in the extractive distillation column, which consumes energy.

Downloaded from Digital Engineering Library @ McGraw-Hill (www.digitalengineeringlibrary.com)
Copyright © 2004 The McGraw-Hill Companies. All rights reserved.
Any use is subject to the Terms of Use as given at the website.

UOP SULFOLANE PROCESS

The more economical choice is an economic and engineering decision. Factors to consider include:

- New versus revamp equipment
- Cost of utilities
- Feed composition (boiling range, nonaromatics, impurities)
- Product specifications

SOLVENT SELECTION

The suitability of a solvent for aromatics extraction involves the relationship between the capacity of the solvent to absorb aromatics (solubility) and the ability of the solvent to differentiate between aromatics and nonaromatics (selectivity). A study of the common polar solvents used for aromatic extraction reveals the following qualitative similarities:

- When hydrocarbons containing the same number of carbon atoms are compared, solubilities decrease in this order: *aromatics>naphthenes>olefins>paraffins.*
- When hydrocarbons in the same homologous series are compared, solubility decreases as molecular weight increases.
- The selectivity of a solvent decreases as the hydrocarbon content, or loading, of the solvent phase increases.

In spite of these general similarities, various commercial solvents used for aromatics recovery have significant quantitative differences. Sulfolane demonstrates better aromatic solubilities at a given selectivity than any other commercial solvent. The practical consequence of these differences is that an extraction unit designed to use Sulfolane solvent requires a lower solvent circulation rate and thus consumes less energy.

In addition to superior solubility and selectivity, Sulfolane solvent has three particularly advantageous physical properties that have a significant impact on plant investment and operating cost:

- *High specific gravity* (1.26). High specific gravity allows the aromatic capacity of Sulfolane to be fully exploited while maintaining a large density difference between the hydrocarbon and solvent phases in the extractor. This large difference in densities minimizes the required extractor diameter. The high density of the liquid phase in the extractive distillation section also minimizes the size of the equipment required there.
- *Low specific heat*—0.4 cal/(g·°C) [0.4 Btu/(lb·°F)]. The low specific heat of Sulfolane solvent reduces heat loads in the fractionators and minimizes the duty on solvent heat exchangers.
- *High boiling point* [287°C (549°F)]. The boiling point of Sulfolane is significantly higher than that of the heaviest aromatic hydrocarbon to be recovered, facilitating the separation of solvent from the aromatic extract.

PROCESS CONCEPT

The Sulfolane process combines both liquid-liquid extraction and extractive distillation in the same process unit. This mode of operation has particular advantages for aromatic recovery:

Downloaded from Digital Engineering Library @ McGraw-Hill (www.digitalengineeringlibrary.com)
Copyright © 2004 The McGraw-Hill Companies. All rights reserved.
Any use is subject to the Terms of Use as given at the website.

UOP SULFOLANE PROCESS

- In liquid-liquid extraction systems, light nonaromatic components are more soluble in the solvent than heavy nonaromatics are. Thus, liquid-liquid extraction is more effective in separating aromatics from the heavy contaminants than from the light ones.
- In extractive distillation, light nonaromatic components are more readily stripped from the solvent than heavy nonaromatics. Thus, extractive distillation is more effective in separating aromatics from the light contaminants than from the heavy ones.

Therefore, liquid-liquid extraction and extractive distillation provide complementary features. Contaminants that are the most difficult to eliminate in one section are the easiest to remove in the other. This combination of techniques permits effective treatment of feedstocks with much broader boiling range than would be possible by either technique alone.

The basic process concept is illustrated in Fig. 2.2.3. Lean solvent is introduced at the top of the main extractor and flows downward. The hydrocarbon feed is introduced at the bottom and flows upward, countercurrent to the solvent phase. As the solvent phase flows downward, it is broken up into fine droplets and redispersed into the hydrocarbon phase by each successive tray. The solvent selectively absorbs the aromatic components from the feed. However, because the separation is not ideal, some of the nonaromatic impurities are also absorbed. The bulk of the nonaromatic hydrocarbons remain in the hydrocarbon phase and are rejected from the main extractor as raffinate.

The solvent phase, which is rich in aromatics, flows downward from the main extractor into the backwash extractor. There the solvent phase is contacted with a stream of light nonaromatic hydrocarbons from the top of the extractive stripper. The light nonaromatics displace the heavy nonaromatic impurities from the solvent phase. The heavy nonaromatics then reenter the hydrocarbon phase and leave the extractor with the raffinate.

The rich solvent from the bottom of the backwash extractor, containing only light nonaromatic impurities, is then sent to the extractive stripper for final purification of the aromatic product. The light nonaromatic impurities are removed overhead in the extractive stripper and recycled to the backwash extractor. A purified stream of aromatics, or extract, is withdrawn in the solvent phase from the bottom of the extractive stripper. The solvent phase is then sent on to the solvent recovery column, where the extract product is separated from the solvent by distillation.

Also shown in Fig. 2.2.3 are the activity coefficients, or K values, for each section of the separation. The K value in extraction is analogous to relative volatility in distillation. The K_i value is a measure of the solvent's ability to repel component i and is defined as the mole fraction of component i in the hydrocarbon phase X_i, divided by the mole fraction of component i in the solvent phase Z_i. The lower the value of K_i, the higher the solubility of component i in the solvent phase.

DESCRIPTION OF THE PROCESS FLOW

Fresh feed enters the extractor and flows upward, countercurrent to a stream of lean solvent, as shown in Fig. 2.2.4. As the feed flows through the extractor, aromatics are selectively dissolved in the solvent. A raffinate stream, very low in aromatics content, is withdrawn from the top of the extractor.

The rich solvent, loaded with aromatics, exits the bottom of the extractor and enters the stripper. The nonaromatic components having volatilities higher than that of benzene are completely separated from the solvent by extractive distillation and removed overhead along with a small quantity of aromatics. This overhead stream is recycled to the extractor, where the light nonaromatics displace the heavy nonaromatics from the solvent phase leaving the bottom of the extractor.

Downloaded from Digital Engineering Library @ McGraw-Hill (www.digitalengineeringlibrary.com)
Copyright © 2004 The McGraw-Hill Companies. All rights reserved.
Any use is subject to the Terms of Use as given at the website.

UOP SULFOLANE PROCESS

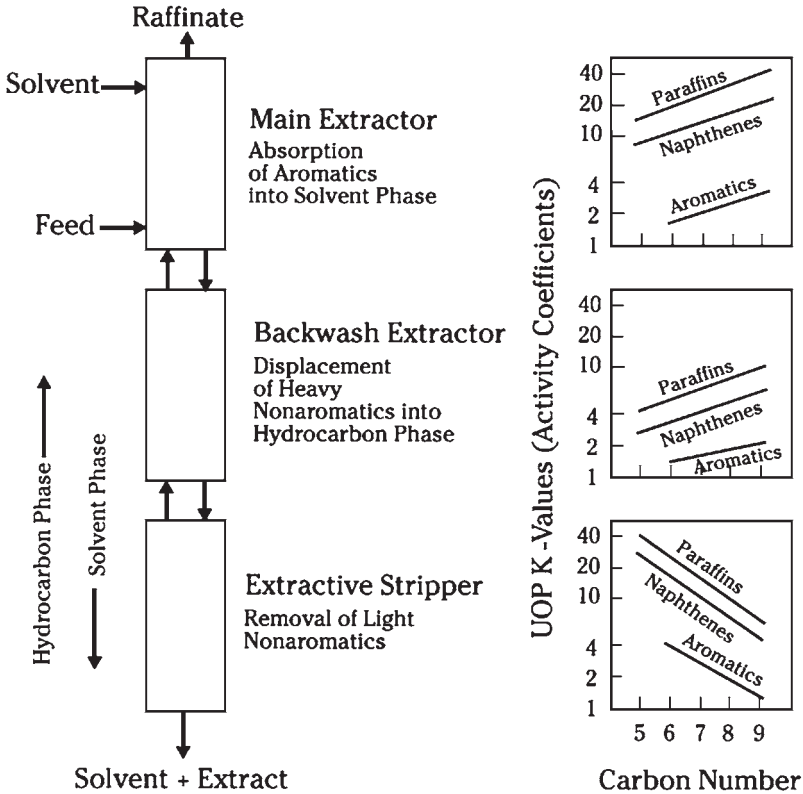

FIGURE 2.2.3 Sulfolane process concept.

The stripper bottoms stream, which is substantially free of nonaromatic impurities, is sent to the recovery column, where the aromatic product is separated from the solvent. Because of the large difference in boiling point between the Sulfolane solvent and the heaviest aromatic component, this separation is accomplished with minimal energy input. To minimize solvent temperatures, the recovery column is operated under vacuum. Lean solvent from the bottom of the recovery column is returned to the extractor. The extract is recovered overhead and sent on to distillation columns downstream for recovery of the individual benzene and toluene products.

The raffinate stream exits the top of the extractor and is directed to the raffinate wash column. In the wash column, the raffinate is contacted with water to remove dissolved solvent. The solvent-rich water is vaporized in the water stripper by exchange with hot circulating solvent and then used as stripping steam in the recovery column. Accumulated solvent from the bottom of the water stripper is pumped back to the recovery column.

The raffinate product exits the top of the raffinate wash column. The amount of Sulfolane solvent retained in the raffinate is negligible. The raffinate product is commonly used for gasoline blending or aliphatic solvent applications.

Under normal operating conditions, Sulfolane solvent undergoes only minor oxidative degradation. A small solvent regenerator is included in the design of the unit as a safeguard

Downloaded from Digital Engineering Library @ McGraw-Hill (www.digitalengineeringlibrary.com)
Copyright © 2004 The McGraw-Hill Companies. All rights reserved.
Any use is subject to the Terms of Use as given at the website.

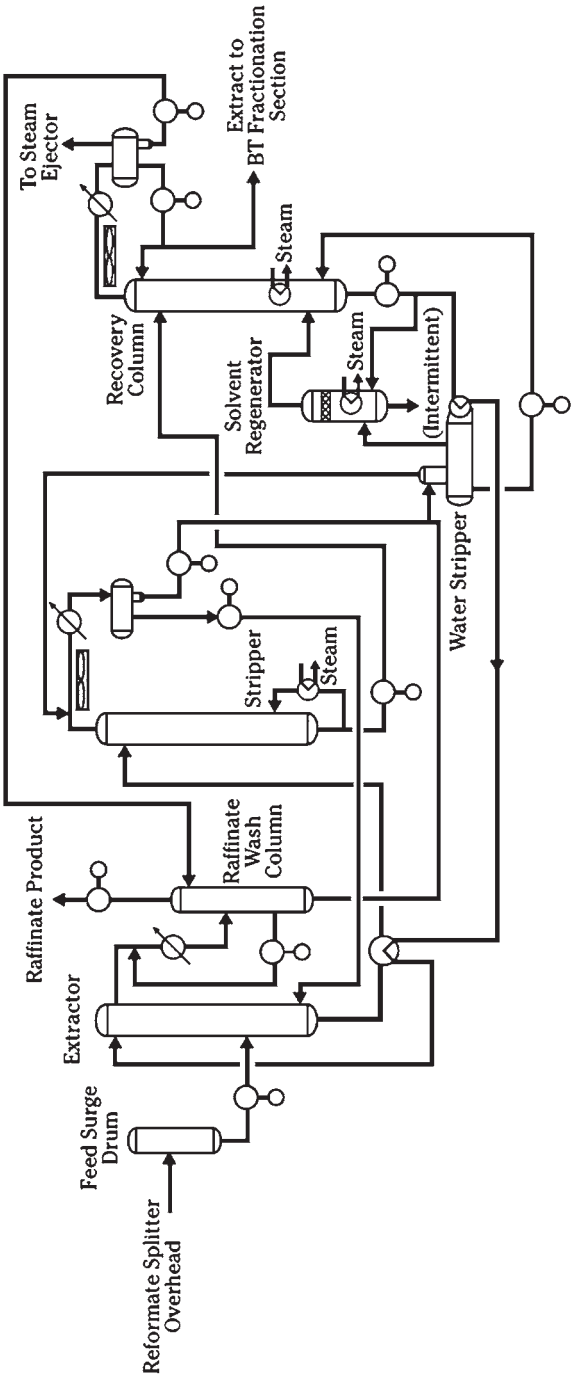

FIGURE 2.2.4 Sulfolane flow diagram.

Downloaded from Digital Engineering Library @ McGraw-Hill (www.digitalengineeringlibrary.com)
Copyright © 2004 The McGraw-Hill Companies. All rights reserved.
Any use is subject to the Terms of Use as given at the website.

UOP SULFOLANE PROCESS

against the possibility of air leaking into the unit. During normal operation, a small slipstream of circulating solvent is directed to the solvent regenerator for removal of oxidized solvent.

The extract product from a Sulfolane unit may contain trace amounts of olefins and other impurities that would adversely affect the acid-wash color tests of the final benzene and toluene products. To eliminate these trace impurities, the extract is clay-treated prior to fractionation. Because clay treating is done at mild conditions, clay consumption is minimal.

The treated extract is directed to the aromatics fractionation section, where high-purity benzene, toluene, and sometimes mixed xylenes are recovered. The design of the aromatics fractionation section varies depending on the particular processing requirements of the refiner. The toluene product is often recycled to a UOP Tatoray* unit for conversion into benzene and xylenes. Mixed xylenes may be routed directly to the xylene recovery section of the plant for separation into *para*-xylene, *ortho*-xylene, and *meta*-xylene products.

Any heavy aromatics in the feed are yielded as a bottoms product from the fractionation section. In most cases, the C_9 aromatics are recovered and recycled to a UOP Tatoray unit for the production of additional xylenes. The heavy aromatics may also be blended back into the refinery gasoline pool or sold as a high-octane blending component.

Figure 2.2.5 shows the process flow of a Sulfolane extractive distillation unit. There are two primary columns in the extractive distillation unit: the extractive distillation column and the solvent recovery column (or solvent stripper column). Aromatic feed is directed to the ED column. It exchanges heat with the lean solvent and enters a central stage of the trayed column. The lean solvent is introduced near to the top of the ED column.

Combining solvent and feed alters the relative volatilities of the components to be separated because of the nonideal behavior of the mixture. This is key to the process. The selectivity of the solvent renders aromatics relatively less volatile than the nonaromatics, as shown in the bottom right chart of Fig. 2.2.3. Good product purity can be achieved if there is sufficient separation of *K* values between the lowest carbon number aromatic and the higher carbon number nonaromatic species.

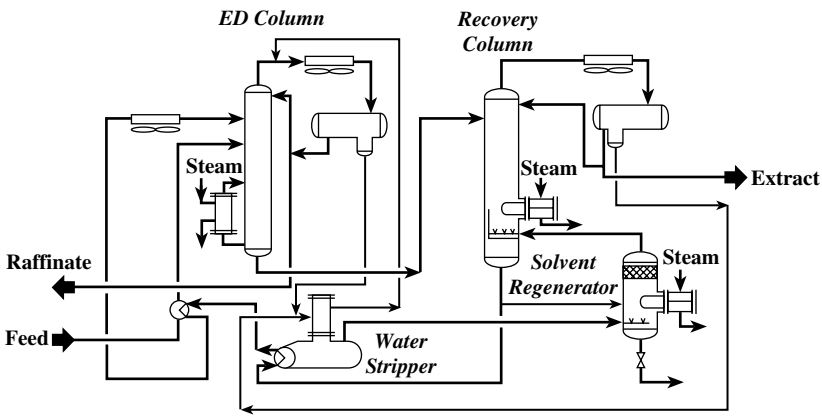

FIGURE 2.2.5 Shell Sulfolane process: extractive distillation.

*Trademark and/or service mark of UOP.

Downloaded from Digital Engineering Library @ McGraw-Hill (www.digitalengineeringlibrary.com)
Copyright © 2004 The McGraw-Hill Companies. All rights reserved.
Any use is subject to the Terms of Use as given at the website.

UOP SULFOLANE PROCESS

As the hydrocarbon vapor stream flows up the ED column, countercurrent to the descending solvent, the aromatics are selectively absorbed. The function of the upper section of the extractive distillation column is to maximize aromatic recovery. The overhead vapor is nonaromatic and is referred to as the raffinate. These vapors are condensed and sent to storage. A portion of the raffinate liquid is used as column reflux to rectify entrained solvent out of the overhead product. Overhead water is collected in the raffinate receiver water boot and returned to the unit water circuit. The extractive distillation column is reboiled with steam.

In the lower section of the ED column, the nonaromatics are preferentially stripped out of the liquid and enter the upper portion of the column as a vapor phase due to the solvent selectivity, which has made the saturates relatively more volatile than the aromatics. Again, because of finite selectivity, some aromatics, primarily benzene, are stripped into the upper section of the column where they must be reabsorbed. The lower section of the ED column serves the function of benzene purification.

The ED column bottoms contain solvent and highly purified aromatics. These materials are sent to the solvent recovery column (solvent stripper column). In this column, aromatics are separated by solvent under vacuum with steam stripping. The overhead aromatic product, depending on the composition (B or BT), is condensed and sent to storage or to clay treating prior to product fractionation. A portion of the extract liquid is used as reflux to remove residual solvent from the extract vapors. The solvent recovery column is reboiled with steam. Water is collected in the extract receiver boot and is directed to the water stripper. This small reboiled column (heated by exchange with the solvent stripper bottoms) generates the stripping steam that is returned to the bottom of the solvent recovery column via the solvent regenerator. Solvent, as it flows down the recovery column, is purified of residual hydrocarbons. At the bottom of the recovery column the solvent is essentially pure Sulfolane with a small amount of water. This is then returned to the ED column as lean solvent. A slipstream of lean solvent is directed to a solvent regenerator to remove any degradation products.

FEEDSTOCK CONSIDERATIONS

The feed to a Sulfolane unit is usually a benzene-toluene (BT) cut from a naphtha reforming unit. The xylene fraction of the reformate is often already pure enough to sell as mixed xylenes or is sent directly to the *para*-xylene recovery section of the aromatics complex. In many facilities, the pygas by-product from a nearby ethylene plant is also directed to a Sulfolane unit. A few plants also use Sulfolane to recover aromatics from coke-oven light oil. Before being sent to a Sulfolane unit, the reformate must first be stripped in a debutanizer column to remove light ends. Pygas and coke-oven light oils must first be hydrotreated to remove dienes, olefins, sulfur, and nitrogen. In general, the feed to a Sulfolane unit should meet the specifications outlined in Table 2.2.1.

PROCESS PERFORMANCE

The performance of the UOP Sulfolane process has been well demonstrated in more than 100 operating units. The recovery of benzene exceeds 99.9 wt %, and recovery of toluene is typically 99.8 wt %. The Sulfolane process is also efficient at recovering heavier aromatics if necessary. Typical recovery of xylenes exceeds 98 wt %, and a recovery of 99 wt % has been demonstrated commercially with rich feedstocks.

Downloaded from Digital Engineering Library @ McGraw-Hill (www.digitalengineeringlibrary.com)
Copyright © 2004 The McGraw-Hill Companies. All rights reserved.
Any use is subject to the Terms of Use as given at the website.

UOP SULFOLANE PROCESS

TABLE 2.2.1 Sulfolane Feedstock Specifications

Contaminant	Effect	Limit
Total sulfur	Contaminates product	0.2 ppm max.
Thiophene	Contaminates product	0.2 ppm max.
Total chloride	Contaminates product, causes corrosion	0.2 ppm max.
Bromine number	Causes higher solvent circulation, increased utility consumption	2 max.
Diene index	Causes higher solvent circulation, increased utility consumption	1 max.
Dissolved oxygen	Causes degradation of solvent	1.0 ppm max.

UOP Sulfolane units routinely produce a benzene product with a solidification point of 5.5°C or better, and many commercial units produce benzene containing less than 100 ppm nonaromatic impurities. The toluene and C_8 aromatics products from a Sulfolane unit are also of extremely high purity and easily exceed nitration-grade specifications. In fact, the ultimate purities of all the aromatic products are usually more dependent on the design and proper operation of the downstream fractionation section than on the extraction efficiency of the Sulfolane unit itself.

The purity and recovery performance of an aromatics extraction unit is largely a function of energy consumption. In general, higher solvent circulation rates result in better performance, but at the expense of higher energy consumption. The UOP Sulfolane process demonstrates the lowest energy consumption of any commercial aromatics extraction technology. A typical UOP Sulfolane unit consumes 275 to 300 kcal of energy per kilogram of extract produced, even when operating at 99.99 wt % benzene purity and 99.95 wt % recovery. UOP Sulfolane units are also designed to efficiently recover solvent for recycle within the unit. Expected solution losses of Sulfolane solvent are less than 5 ppm of the fresh feed rate to the unit.

EQUIPMENT CONSIDERATIONS

The extractor uses rain-deck trays to contact the upward-flowing feed with the downward-flowing solvent. The rain-deck trays act as distributors to maintain an evenly dispersed "rain" of solvent droplets moving down through the extractor to facilitate dissolution of the aromatic components into the solvent phase. A typical Sulfolane extractor column contains 94 rain-deck trays.

The raffinate wash column is used to recover residual solvent carried over in the raffinate from the extractor. The wash column uses jet-deck trays to provide countercurrent flow between the wash water and raffinate. A typical wash column contains eight jet-deck trays.

The stripper column is used to remove any light nonaromatic hydrocarbons in the rich solvent by extractive distillation. The Sulfolane solvent increases the relative volatilities between the aromatic and nonaromatic components, thus facilitating the removal of light nonaromatics in the column overhead. A typical stripper column contains 34 sieve trays. The recovery column separates the aromatic extract from the Sulfolane solvent by vacuum distillation. A typical recovery column contains 34 valve trays.

The Sulfolane extractive distillation unit has less equipment than a conventional unit. The rain-deck extractor and raffinate wash column are eliminated. Solvent in the raffinate,

Downloaded from Digital Engineering Library @ McGraw-Hill (www.digitalengineeringlibrary.com)
Copyright © 2004 The McGraw-Hill Companies. All rights reserved.
Any use is subject to the Terms of Use as given at the website.

as described above, is eliminated by the ED column reflux. In the case of a benzene-only feed, all the equipment associated with water circulation and stripping steam can be eliminated. A Sulfolane unit is approximately 80 percent of the cost of an LLE/ED unit.

The solvent regenerator is a short, vertical drum that is used to remove the polymers and salts formed as a result of the degradation of solvent by oxygen. The regenerator is operated under vacuum and runs continuously.

The Sulfolane process is highly heat-integrated. Approximately 11 heat exchangers are designed into a typical unit.

All the equipment for the Sulfolane unit, with the exception of the solvent regenerator reboiler, is specified as carbon steel. The solvent regenerator reboiler is constructed of stainless steel.

CASE STUDY

A summary of the investment cost and utility consumption for a typical Sulfolane unit is shown in Table 2.2.2. The basis for this case is a Sulfolane unit processing 54.5 metric tons per hour (MT/h) [10,400 barrels per day (BPD)] of a BT reformate cut. This case corresponds to the case study for an integrated UOP aromatics complex in Chap. 2.1 of this handbook. The investment cost is limited to the Sulfolane unit itself and does not include downstream fractionation. The estimated erected cost for the Sulfolane unit assumes construction on a U.S. Gulf Coast site in 2002. The scope of the estimate includes engineering, procurement, erection of equipment on the site, and the initial inventory of Sulfolane solvent.

COMMERCIAL EXPERIENCE

Since the early 1950s, UOP has licensed four different aromatics extraction technologies, including the Udex,* Sulfolane, Tetra,* and Carom* processes. UOP's experience in aromatics extraction encompasses more than 200 units, which range in size from 2 to 260 MT/h (400 to 50,000 BPD) of feedstock.

In 1952, UOP introduced the first large-scale aromatics extraction technology, the Udex process, which was jointly developed by UOP and Dow Chemical. Although the Udex process uses either diethylene glycol or triethlyene glycol as a solvent, it is similar to the Sulfolane process in that it combines liquid-liquid extraction with extractive distillation. Between 1950 and 1965, UOP licensed a total of 82 Udex units.

*Trademark and/or service mark of UOP.

TABLE 2.2.2 Investment Cost and Utility Consumption*

Estimated erected cost, million $ U.S.	13.5
Utility consumption:	
Electric power, kW	390
High-pressure steam, MT/h (klb/h)	27.5 (60.6)
Cooling water, m^3/h (gal/min)	274 (1207)

*Basis: 25.0 MT/h of toluene product, 11.8 MT/h of benzene product, 54.5 MT/h (10,400 BPD) of BT reformate feedstock.

Note: MT/h = metric tons per hour; BPD = barrels per day.

Downloaded from Digital Engineering Library @ McGraw-Hill (www.digitalengineeringlibrary.com)
Copyright © 2004 The McGraw-Hill Companies. All rights reserved.
Any use is subject to the Terms of Use as given at the website.

UOP SULFOLANE PROCESS

In the years following the commercialization of the Udex process, considerable research was done with other solvent systems. In 1962, Shell commercialized the first Sulfolane units at its refineries in England and Italy. The success of these units led to an agreement in 1965 whereby UOP became the exclusive licenser of the Shell Sulfolane process. Many of the process improvements incorporated in modern Sulfolane units are based on design features and operating techniques developed by UOP. By 1995, UOP had licensed a total of 120 Sulfolane units throughout the world.

Meanwhile, in 1968, researchers at Union Carbide discovered that tetraethylene glycol had a higher capacity for aromatics than the solvents being used in existing Udex units. Union Carbide soon began offering this improved solvent as the Tetra process. Union Carbide licensed a total of 17 Tetra units for aromatics extraction; 15 of these units were originally UOP Udex units that were revamped to take advantage of the improvements offered by the Tetra process.

Union Carbide then commercialized the Carom process in 1986. The Carom flow scheme is similar to that used in the Udex and Tetra processes, but the Carom process takes advantage of a unique two-component solvent system that nearly equals the performance of the Sulfolane solvent. In 1988, UOP merged with the CAPS division of Union Carbide. As a result of this merger, UOP now offers both the Sulfolane and Carom processes for aromatics extraction and continues to support the older Udex and Tetra technologies.

The Carom process is ideal for revamping older Udex and Tetra units for higher capacity, lower energy consumption, or better product purity. The Carom process can also be competitive with the Sulfolane process for new-unit applications. By 2002, UOP had licensed a total of seven Carom units. Six of these units are conversions of Udex or Tetra units, and one is a new unit.

BIBLIOGRAPHY

Jeanneret, J. J., P. Fortes, T. L. LaCosse, V. Sreekantham, and T. J. Stoodt: "Sulfolane and Carom Processes: Options for Aromatics Extraction," UOP Technology Conferences, various locations, September 1992.

Downloaded from Digital Engineering Library @ McGraw-Hill (www.digitalengineeringlibrary.com)
Copyright © 2004 The McGraw-Hill Companies. All rights reserved.
Any use is subject to the Terms of Use as given at the website.

Downloaded from Digital Engineering Library @ McGraw-Hill (www.digitalengineeringlibrary.com)
Copyright © 2004 The McGraw-Hill Companies. All rights reserved.
Any use is subject to the Terms of Use as given at the website.

Source: HANDBOOK OF PETROLEUM REFINING PROCESSES

CHAPTER 2.3
UOP THERMAL HYDRODEALKYLATION (THDA) PROCESS

Thomas J. Stoodt and Antoine Negiz
UOP LLC
Des Plaines, Illinois

INTRODUCTION

The importance of benzene as an intermediate in the production of organic-based materials is exceeded only by that of ethylene. Benzene represents the basic building block for direct or indirect manufacture of well over 250 separate products or product classifications.

Historically, the major consumption of benzene has been in the production of ethylbenzene (for polystyrene), cumene (for phenol and acetone), and cyclohexane (for nylon). Significant quantities of benzene are also consumed in the manufacture of aniline, detergent alkylate, and maleic anhydride.

At present, approximately 92 percent of the benzene produced worldwide comes directly from petroleum sources. Catalytic reforming supplies most of the petroleum-derived petrochemical benzene. However, toluene is produced in greater quantities than benzene in the reforming operation, and in many areas, low market demand for toluene can make its conversion to benzene via dealkylation economically attractive. Approximately 13 percent of the petrochemical benzene produced in the world is derived from toluene dealkylation.

The thermal hydrodealkylation (THDA) process provides an efficient method for the conversion of alkylbenzenes to high-purity benzene. In addition to producing benzene, the THDA process can be economically applied to the production of quality naphthalene from suitable feedstocks.

PROCESS DESCRIPTION

The UOP THDA* process converts alkylbenzenes and alkylnaphthalenes to their corresponding aromatic rings, benzene and naphthalene. The relation between product distribu-

*Trademark and/or service mark of UOP.

Downloaded from Digital Engineering Library @ McGraw-Hill (www.digitalengineeringlibrary.com)
Copyright © 2004 The McGraw-Hill Companies. All rights reserved.
Any use is subject to the Terms of Use as given at the website.

UOP THERMAL HYDRODEALKYLATION (THDA) PROCESS

tion and operating severity is such that, for both benzene and naphthalene operations, the conversion per pass of fresh feed is maintained at somewhat less than 100 percent. A simplified process flow diagram for benzene manufacture is presented in Fig. 2.3.1.

The alkyl-group side chains of the alkyl-aromatic feed as well as nonaromatics that may be present in the unit feed are converted to a light paraffinic coproduct gas consisting mainly of methane. The basic hydrodealkylation reaction enables the process to produce a high-purity benzene or naphthalene product without applying extraction or superfractionation techniques, even when charging a mixture of alkyl aromatics and nonaromatic hydrocarbons. Excessive nonaromatics in the charge significantly add to hydrogen consumption.

Product yields approach stoichiometric with benzene yield from toluene approximating 99 percent on a molal basis. A small amount of heavy-aromatic material consisting of biphenyl-type compounds is coproduced.

In a benzene unit, fresh toluene feedstock is mixed with recycle toluene and recycle and fresh hydrogen gases, heated by exchange in a fired heater, and then charged to the reactor. Alkyl aromatics are hydrodealkylated to benzene and nonaromatics, and paraffins and naphthalenes are hydrocracked. The effluent from the reactor is cooled and directed to the product separator, where it separates into a liquid phase and gas phase. The hydrogen-rich gas phase is recycled to the reactor, and the separator liquid is charged to a stripper for the removal of light ends. Stripper bottoms are percolated through a clay treater to the fractionation section, where high-purity benzene is obtained as an upper sidecut from a benzene fractionation column. Unconverted toluene is recycled to the reactor from the lower sidecut of the benzene column. Heavy-aromatic by-product is withdrawn from the bottom of the column to storage.

The reactor-section process flow in a naphthalene THDA unit is similar to that described for the benzene unit. Fresh feed is mixed with unconverted recycle alkyl aromatics and makeup and recycle hydrogen. The mixture is then heated and charged to the reactor. Materials in the feedstock materials that boil close to naphthalene would make the

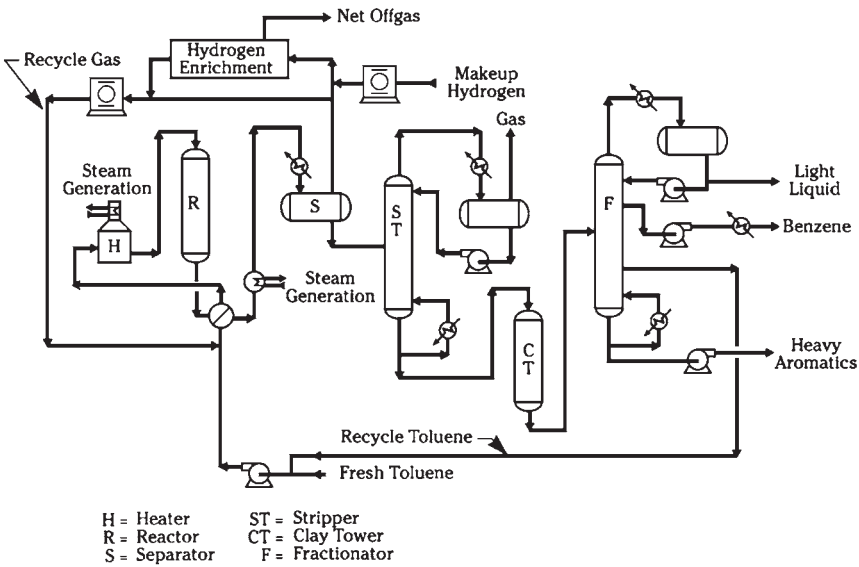

FIGURE 2.3.1 UOP THDA process for benzene production.

Downloaded from Digital Engineering Library @ McGraw-Hill (www.digitalengineeringlibrary.com)
Copyright © 2004 The McGraw-Hill Companies. All rights reserved.
Any use is subject to the Terms of Use as given at the website.

UOP THERMAL HYDRODEALKYLATION (THDA) PROCESS

recovery of high-purity product either impossible or uneconomic if they remain unconverted. Process conditions are set to ensure that these materials are hydrocracked or dealkylated, or both, to products easily separated by fractionation.

In the case of naphthalene, the aromatic-splitter bottoms are charged to a naphthalene splitter, where the small amount of heavy-aromatic coproduct is rejected as a bottoms product. Naphthalene splitter overhead is directed to the naphthalene fractionator, where high-purity naphthalene is recovered as an overhead product. Naphthalene fractionator bottoms are recycled to the reactor section. In both benzene and naphthalene THDA units, clay treating of the product is generally required to meet the usual acid-wash color specifications.

Several design options are available for optimizing hydrogen usage in both types of units. Coproduct light ends, primarily methane, must be removed from the reaction section to maintain hydrogen purity. When the supply of makeup hydrogen is limited, consideration also must be given to the elimination of C_3 and heavier nonaromatic hydrocarbons from the makeup gas. If present, these materials hydrocrack and substantially increase hydrogen consumption. During the design stage of hydrodealkylation units, careful attention must be given to hydrogen consumption and availability as related to overall refinery operation.

Depending on the application, THDA units can process a wide variety of feedstocks. For the production of benzene, feedstocks could include extracted light alkylbenzene, suitably treated coke-oven light oil, and pyrolysis coproducts. Feedstocks to produce naphthalene could include heavy reformate, extracted cycle oils from the fluid catalytic cracking (FCC) process, and coal-tar-derived materials.

Benzene produced from commercial THDA units typically has a freeze point of 5.5°C, which exceeds the ASTM Benzene-545 benzene specifications.

PROCESS ECONOMICS

Although THDA yields are about 99 percent on a molar basis, they are considerably lower on a weight basis because of the change in molecular weight. Weight yields for the dealkylation of toluene to benzene are shown in Table 2.3.1. Investment and utility requirements are shown in Table 2.3.2.

TABLE 2.3.1 THDA Yields

Benzene production	Feeds, wt %	Product, wt %
Hydrogen (chemical consumption)	2.3	
Methane		17.7
Ethane		0.6
Benzene		83.6
Toluene	100	
Heavy aromatics		0.4
Total	102.3	102.3

Downloaded from Digital Engineering Library @ McGraw-Hill (www.digitalengineeringlibrary.com)
Copyright © 2004 The McGraw-Hill Companies. All rights reserved.
Any use is subject to the Terms of Use as given at the website.

UOP THERMAL HYDRODEALKYLATION (THDA) PROCESS

TABLE 2.3.2 THDA Process Investment and Utility Requirements*

Estimated battery-limits erected cost	$9.5 million
Utilities	
Electric power, kW	620
Fuel, 10^6 kcal/h (10^6 Btu/h)	63 (250)
Cooling water, m^3/h (gal/min)	112 (495)

*Basis: 1200 BPD of toluene feed.
Note: MT/h = metric tons per hour; MTA = metric tons per annum; BPSD = barrels per stream-day.

The economics of benzene manufacture via the THDA process are very sensitive to the relative prices of benzene and toluene. As a general rule, THDA becomes economically viable when the price of benzene (per unit volume) is more than 1.25 times the price of toluene. For this reason, the THDA process has become the process used to meet benzene demand during peak periods. When benzene is in low demand, THDA units are not operated. However, a UOP-designed THDA is easily revamped at low cost to a Tatoray process unit. This flexibility greatly extends the utilization of expensive processing equipment and provides a means of generating a wider product state (for example, benzene and mixed xylenes) during periods of low benzene demand.

Downloaded from Digital Engineering Library @ McGraw-Hill (www.digitalengineeringlibrary.com)
Copyright © 2004 The McGraw-Hill Companies. All rights reserved.
Any use is subject to the Terms of Use as given at the website.

Source: HANDBOOK OF PETROLEUM REFINING PROCESSES

CHAPTER 2.4
BP-UOP CYCLAR PROCESS

Lubo Zhou
UOP LLC
Des Plaines, Illinois

INTRODUCTION

In recent years, light hydrocarbons have become increasingly attractive as fuels and petrochemical feedstocks, and much effort has been devoted to improving the recovery, processing, and transportation of liquefied petroleum gas (LPG) and natural gas. Because production areas are often located in remote areas that are far removed from established processing plants or consumers, elaborate product transport infrastructures are required. Although natural gas can be moved economically through pipelines, condensation problems limit the amount of LPG that can be transported in this way. Thus, most LPG is transported by such relatively expensive means as special-purpose tankers or railcars. The high cost of transporting LPG can often depress its value at the production site. This statement is especially true for propane, which is used much less than butane for gasoline blending and petrochemical applications.

British Petroleum (BP) recognized the problem with transporting LPG and in 1975 began research on a process to convert LPG to higher-value liquid products that could be shipped more economically. This effort led to the development of a catalyst that was capable of converting LPG to petrochemical-grade benzene, toluene, and xylenes (BTX) in a single step. However, BP soon realized that the catalyst had to be regenerated often in this application and turned to UOP* for its well-proven CCR* technology, which continuously regenerates the catalyst. UOP developed a high-strength formulation of the BP catalyst that would work in CCR service and also applied the radial-flow, stacked-reactor design originally developed for the UOP Platforming* process. The result of this outstanding technical collaboration is the BP-UOP Cyclar* process.

PROCESS CHEMISTRY

The Cyclar process converts LPG directly to a liquid aromatics product in a single operation. The reaction is best described as dehydrocyclodimerization and is thermodynamically favored at temperatures above 425°C (800°F). The dehydrogenation of light paraffins

*Trademark and/or service mark of UOP.

Downloaded from Digital Engineering Library @ McGraw-Hill (www.digitalengineeringlibrary.com)
Copyright © 2004 The McGraw-Hill Companies. All rights reserved.
Any use is subject to the Terms of Use as given at the website.

BP-UOP CYCLAR PROCESS

(propane and butanes) to olefins is the rate-limiting step (Fig. 2.4.1). Once formed, the highly reactive olefins oligomerize to form larger intermediates, which then rapidly cyclize to naphthenes. These reactions—dehydrogenation, oligomerization, and cyclization—are all acid-catalyzed. The shape selectivity of the zeolite component of the catalyst also promotes the cyclization reaction and limits the size of the rings formed. The final reaction step is the dehydrogenation of the naphthenes to their corresponding aromatics. This reaction is highly favored at Cyclar operating conditions, and the result is virtually complete conversion of the naphthenes.

The reaction intermediates can also undergo a hydrocracking side reaction to form methane and ethane. This side reaction results in a loss of yield because methane and ethane are inert at Cyclar operating conditions.

Because olefins are a key reaction intermediate, they can of course be included in the feed to the Cyclar unit. Heavier paraffins, such as pentanes, can also be included in the feed. Olefins and pentanes are almost completely converted in the Cyclar unit, but the unit must be designed to handle them because they result in a higher catalyst-coking rate than pure butane and propane feedstocks.

Although the reaction sequence involves some exothermic steps, the preponderance of dehydrogenation reactions results in a highly endothermic overall reaction. Five moles of hydrogen are produced for every mole of aromatic components formed from propane or butane.

Because propane and butanes are relatively unreactive, the Cyclar process requires a catalyst with high activity. At the same time, the production of methane and ethane from unwanted hydrocracking side reactions must be minimized. An extensive joint effort by BP and UOP has resulted are a catalyst that combines several important features to ensure efficient commercial operation:

- At the conditions necessary for high selectivity to aromatics, the conversion performance of the catalyst declines slowly.
- The selectivity to aromatics is nearly constant over the normal range of conversion, resulting in stable product yield and quality. Thus, economic process performance can be maintained despite normal fluctuations in unit operation.
- At normal process conditions, the rate of carbon deposition on the catalyst is slow and steady, amounting to less than 0.02 wt % of the feed processed. Because the carbon levels on spent catalyst are low, regeneration requirements are relatively mild. Mild regeneration conditions extend the life of the catalyst and make it insensitive to process upsets and changes in feedstock composition.

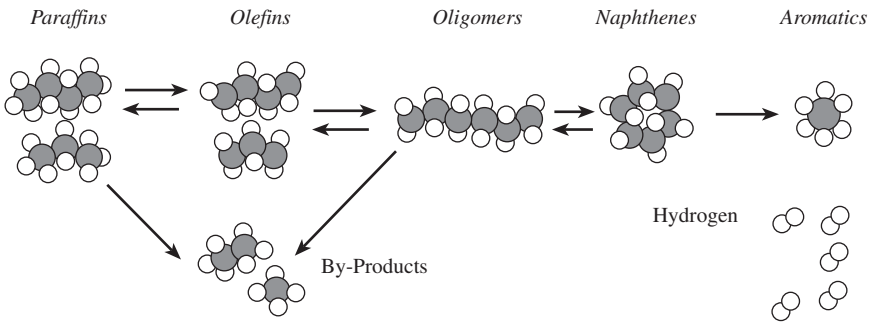

FIGURE 2.4.1 Cyclar reaction mechanism.

Downloaded from Digital Engineering Library @ McGraw-Hill (www.digitalengineeringlibrary.com)
Copyright © 2004 The McGraw-Hill Companies. All rights reserved.
Any use is subject to the Terms of Use as given at the website.

BP-UOP CYCLAR PROCESS

- The catalyst exhibits high thermal stability and is relatively insensitive to common feedstock contaminants. Regeneration fully restores the activity and selectivity of the catalyst to the performance seen with fresh catalyst.
- High mechanical strength and low attrition characteristics make the catalyst well suited for continuous catalyst regeneration.

DESCRIPTION OF THE PROCESS FLOW

A Cyclar unit is divided into three major sections. The reactor section includes the radial-flow reactor stack, combined feed exchanger, charge heater, and interheaters. The regenerator section includes the regenerator stack and catalyst transfer system. The product recovery section includes the product separators, compressors, stripper, and gas recovery equipment.

The flow scheme is similar to the UOP CCR Platforming process, which is used widely throughout the world for reforming petroleum naphtha. A simplified block flow diagram is shown in Fig. 2.4.2. Fresh feed and recycle are combined and heat exchanged against reactor effluent. The combined feed is then raised to reaction temperature in the charge heater and sent to the reactor section. Four adiabatic, radial-flow reactors are arranged in a vertical stack. Catalyst flows vertically by gravity down the stack, and the charge flows radially across the annular catalyst beds. Between each reactor, the vaporized charge is reheated to reaction temperature in an interheater.

The effluent from the last reactor is split into vapor and liquid products in a product separator. The liquid is sent to a stripper, where light saturates are removed from the C_6+ aromatic product. Vapor from the product separator is compressed and sent to a gas recovery section, typically a cryogenic unit, for separation into a 95 percent pure hydrogen product stream, a fuel gas stream of light saturates, and a recycle stream of unconverted LPG. Hydrogen is not recycled.

Because coke builds up on the Cyclar catalyst over time at reaction conditions, partially deactivated catalyst is continually withdrawn from the bottom of the reactor stack for regeneration. Figure 2.4.3 shows additional details of the catalyst regeneration section. A discrete amount of spent catalyst flows into a lock hopper, where it is purged with nitrogen. The purged catalyst is then lifted with nitrogen to the disengaging hopper at the top of the regenerator. The catalyst flows down through the regenerator, where the accumulated carbon is burned off. Regenerated catalyst flows down into the second lock hopper, where it is purged with hydrogen and then lifted with hydrogen to the top of the reactor stack. Because the reactor and regenerator sections are separate, each operates at its own optimal conditions. In addition, the regeneration section can be temporarily shut down for maintenance without affecting the operation of the reactor and product recovery sections.

FEEDSTOCK CONSIDERATIONS

Propane and butanes should be the major components in the feedstock to a Cyclar unit. The C_1 and C_2 saturates should be minimized because these components act as inert diluents. Olefins should be limited to less than 10 percent of the feed. Higher concentrations of olefins require hydrogenation of the feed. The C_5 and C_6 components increase the rate of coke formation in the process and should be limited to less than 20 and 2 wt %, respectively, in Cyclar units designed for LPG service. Cyclar units can be designed to process significantly higher amounts of C_5 and C_6 materials if necessary. In general, the feed to a Cyclar unit should meet the specifications outlined in Table 2.4.1.

Downloaded from Digital Engineering Library @ McGraw-Hill (www.digitalengineeringlibrary.com)
Copyright © 2004 The McGraw-Hill Companies. All rights reserved.
Any use is subject to the Terms of Use as given at the website.

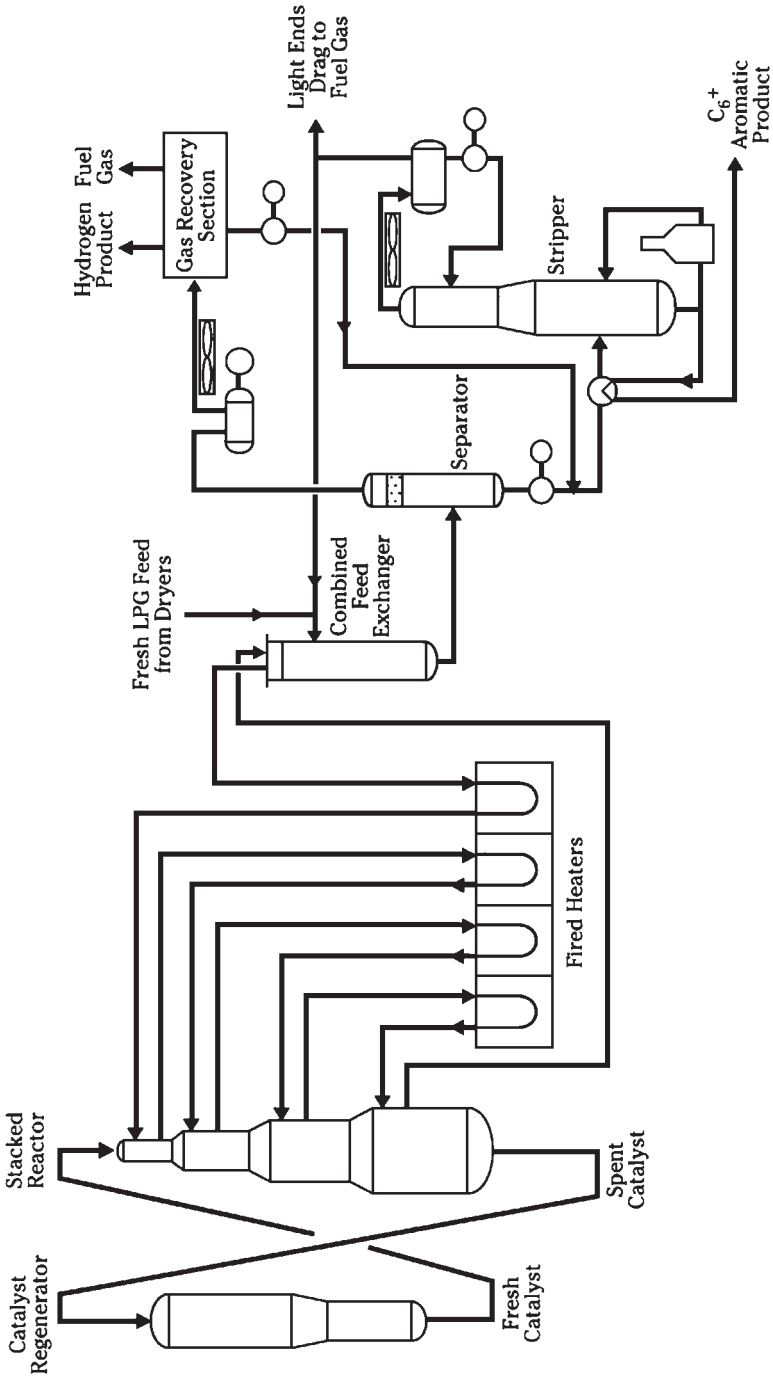

FIGURE 2.4.2 Cyclar flow diagram.

Downloaded from Digital Engineering Library @ McGraw-Hill (www.digitalengineeringlibrary.com)
Copyright © 2004 The McGraw-Hill Companies. All rights reserved.
Any use is subject to the Terms of Use as given at the website.

BP-UOP CYCLAR PROCESS

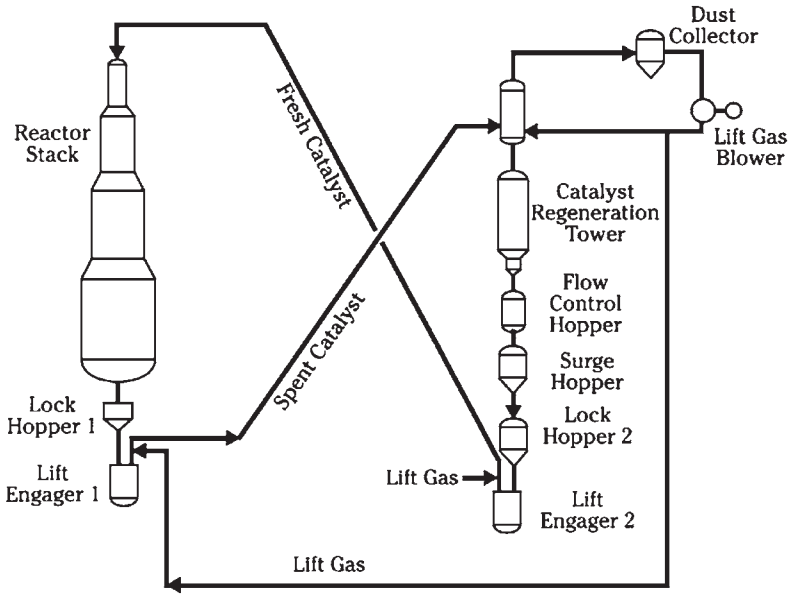

FIGURE 2.4.3 Catalyst regeneration section.

PROCESS PERFORMANCE

The major liquid products from a Cyclar process unit are BTX and C_9+ aromatics. These products may be separated from one another by conventional fractionation downstream of the Cyclar stripper column.

In general, aromatics yield increases with the carbon number of the feedstock. In a low-pressure operation, the overall aromatics yield increases from 62 wt % of fresh feed with an all-propane feedstock to 66 percent with an all-butane feed. With this yield increase comes a corresponding decrease in fuel gas production. These yield figures can be interpolated linearly for mixed propane and butane feedstocks. The distribution of butane isomers in the feed has no effect on yields.

The distribution of aromatic components in the liquid product is also affected by feedstock composition. Butane feedstocks produce a product that is leaner in benzene and richer in xylenes than that produced from propane (Fig. 2.4.4). With either propane or butane feeds, the liquid product contains about 91 percent BTX and 9 percent heavier aromatics.

The Cyclar unit produces aromatic products with nonaromatic impurities limited to 1500 ppm or less. Thus, marketable, high-quality, petrochemical-grade BTX can be obtained by fractionation alone, without the need for subsequent extraction.

The by-product light ends contain substantial amounts of hydrogen, which may be recovered in several different ways, depending on the purity desired:

- An absorber-stripper system produces a 65 mol % hydrogen product stream.
- A cold box produces 95 mol % hydrogen.
- An absorber-stripper system combined with a pressure-swing absorption (PSA) unit produces 99 mol % hydrogen.

Downloaded from Digital Engineering Library @ McGraw-Hill (www.digitalengineeringlibrary.com)
Copyright © 2004 The McGraw-Hill Companies. All rights reserved.
Any use is subject to the Terms of Use as given at the website.

BP-UOP CYCLAR PROCESS

TABLE 2.4.1 Feedstock Specifications

Contaminant	Limit
Sulfur	<20 mol ppm
Water	No free water
Oxygenates	<10 wt ppm
Basic nitrogen	<1 wt ppm
Fluorides	<0.3 wt ppm
Metals	<50 wt ppb

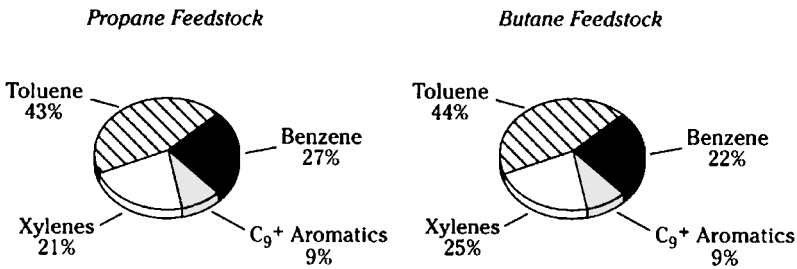

FIGURE 2.4.4 Cyclar aromatic product distribution.

- A cold box combined with a PSA unit is usually more attractive if large quantities of 99+ mol % hydrogen are desired.

EQUIPMENT CONSIDERATIONS

The principal Cyclar operating variables are feedstock composition, pressure, space velocity, and temperature. The temperature must be high enough to ensure nearly complete conversion of reaction intermediates to produce a liquid product that is essentially free of nonaromatic impurities but low enough to minimize nonselective thermal reactions. Space velocity is optimized against conversion within this temperature range to obtain high product yields with minimum operating costs.

Reaction pressure has a big impact on process performance. Higher pressure increases reaction rates, thus reducing catalyst requirements. However, some of this higher reactivity is due to increased hydrocracking, which reduces aromatic product yield. UOP currently offers two alternative Cyclar process designs. The low-pressure design is recommended when maximum aromatics yield is desired. The high-pressure design requires only one-half the catalyst and is attractive when minimum investment and operating costs are the overriding considerations (Fig. 2.4.5).

Various equipment configurations are possible depending on whether a gas turbine, steam turbine, or electric compressor drive is specified; whether air-cooling or water-cooling equipment is preferred; and whether steam generation is desirable.

Downloaded from Digital Engineering Library @ McGraw-Hill (www.digitalengineeringlibrary.com)
Copyright © 2004 The McGraw-Hill Companies. All rights reserved.
Any use is subject to the Terms of Use as given at the website.

BP-UOP CYCLAR PROCESS

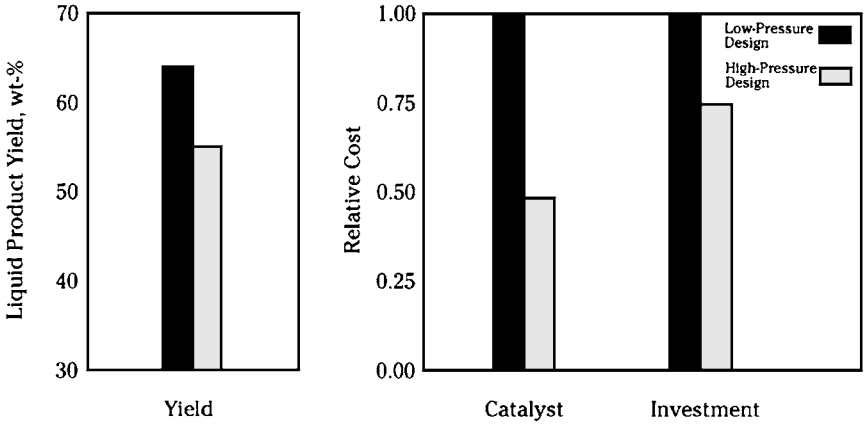

FIGURE 2.4.5 Effect of Cyclar operation pressure.

CASE STUDY

The overall material balance, investment cost, and utility consumption for a representative Cyclar unit are shown in Table 2.4.2. The basis for this case is a low-pressure Cyclar unit processing 54 metric tons per hour (MT/h) [15,000 barrels per day (BPD)] of a feed consisting of 50 wt % propane and 50 wt % butanes. The investment cost is limited to the Cyclar unit and stripper column and does not include further downstream product fractionation. The estimated erected cost for the Cyclar unit assumes construction on a U.S. Gulf Coast site in 1995. The scope of the estimate includes engineering, procurement, erection of equipment on-site, and the initial load of Cyclar catalyst.

Economic Comparison of Cyclar and Naphtha Reforming

Figure 2.4.6 shows the economic comparison of an aromatic complex based on a Cyclar and naphtha reforming unit. The feed to Cyclar was assumed at 50 percent C_3 and 50 percent C_4 by weight. The same *para*-xylene production rate was assumed for both cases in the study. From 1995 to 1999, the aromatic complex based on a Cyclar and a reforming unit had similar gross profit. The price for the feed and major products used in the study is listed in Table 2.4.3, and the price for by-products is listed in Table 2.4.4.

COMMERCIAL EXPERIENCE

The UOP CCR technology, first commercialized in 1971 for the Platforming process, has been applied to the Oleflex* and Cyclar process technologies. More than 100 CCR units are currently operating throughout the world. The combination of a radial-flow, stacked reactor and a continuous catalyst regenerator has proved to be extremely reliable. On-stream efficiencies of more than 95 percent are routinely achieved in commercial CCR Platforming units.

*Trademark and/or service mark of UOP.

Downloaded from Digital Engineering Library @ McGraw-Hill (www.digitalengineeringlibrary.com)
Copyright © 2004 The McGraw-Hill Companies. All rights reserved.
Any use is subject to the Terms of Use as given at the website.

BP-UOP CYCLAR PROCESS

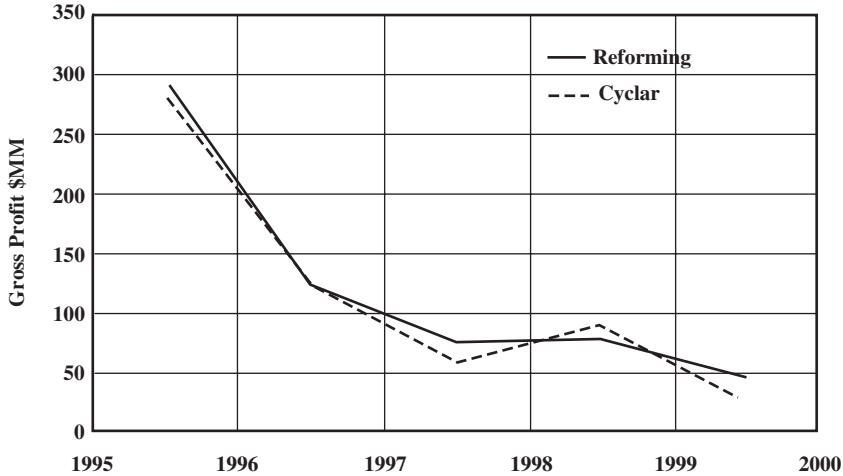

Constant p-xylene production

FIGURE 2.4.6 Economic comparison of gross profit for 1995–1999 values.

TABLE 2.4.2 Material Balance and Investment Cost*

Overall material balance	MTA
LPG feedstock	430,000
Products:	
Benzene	66,700
Toluene	118,800
Mixed xylenes	64,000
C_9+ aromatics	24,600
Hydrogen (95 mol %)	29,400
Fuel gas	126,500
Estimated erected cost, million $ U.S.	79.0
Utility consumption:	
Electric power, kW	5500
High-pressure steam, MT/h	27 (credit)
Low-pressure steam, MT/h	7
Boiler feedwater, MT/h	33
Cooling water, m^3/h	640
Fuel fired, million kcal/h	70

*Basis: 54 ton/h (15,000 BPD) of LPG feedstock. Feed composition: 50 wt % propane, 50 wt % butanes.

Note: MTA = metric tons per annum; MT/h = metric tons per hour; BPD = barrels per day.

Downloaded from Digital Engineering Library @ McGraw-Hill (www.digitalengineeringlibrary.com)
Copyright © 2004 The McGraw-Hill Companies. All rights reserved.
Any use is subject to the Terms of Use as given at the website.

BP-UOP CYCLAR PROCESS

TABLE 2.4.3 Price Used for Feed and Major Products, $/MT

Year	Naphtha	LPG	Bz	*p*-X
1995	139	120	300	960
1996	168	130	305	570
1997	171	145	310	440
1998	115	85	225	380
1999	150	125	210	375

TABLE 2.4.4 Price for By-products

• Raffinate	Same as naphtha
• Hydrogen	$105/MT (fuel)
• Fuel gas	$35/MT
• Isomar liquid	0.5 × benzene value
• Naphthalenes	$100/MT
• $A_{10}+$	$35/MT

BP commissioned the first commercial-scale Cyclar unit at its refinery in Grangemouth, Scotland, in January 1990. This demonstration unit was designed to process 30,000 metric tons per annum (MTA) of propane or butane feedstock at either high or low pressure over a wide range of operating conditions. The demonstration effort was a complete success because it proved all aspects of the Cyclar process on a commercial scale and supplied sufficient data to confidently design and guarantee future commercial units. The Cyclar unit at Grangemouth demonstration unit was dismantled in 1992 after completion of the development program.

In 1995, UOP licensed the first Cyclar-based aromatics complex in the Middle East. This Cyclar unit is a low-pressure design that is capable of converting 1.3 million MTA of LPG to aromatics. The associated aromatics complex is designed to produce 350,000 MTA of benzene, 300,000 MTA of *para*-xylene, and 80,000 MTA of *ortho*-xylene. This new aromatics complex started in August 1999 and continues to operate at present.

BIBLIOGRAPHY

Doolan, P. C.: "Cyclar: LPG to Valuable Aromatics," *DeWitt Petrochemical Review,* Houston, March 1989.

Doolan, P. C., and P. R. Pujado: "Make Aromatics from LPG," *Hydrocarbon Processing,* September 1989.

Gosling, C. D., G. L. Gray, and J. J. Jeanneret: "Produce BTX from LPG with Cyclar," CMAI World Petrochemical Conference, Houston, March 1995.

Gosling, C. D., F. P. Wilcher, and P. R. Pujado: "LPG Conversion to Aromatics," Gas Processors Association 69th Annual Convention, Phoenix, March 1990.

Gosling, C. D., F. P. Wilcher, L. Sullivan, and R. A. Mountford: "Process LPG to BTX Products," *Hydrocarbon Processing,* December 1991.

Martindale, D. C., P. J. Kuchar, and R. K. Olson: "Cyclar: Aromatics from LPG," UOP Technology Conferences, various locations, September 1988.

Downloaded from Digital Engineering Library @ McGraw-Hill (www.digitalengineeringlibrary.com)
Copyright © 2004 The McGraw-Hill Companies. All rights reserved.
Any use is subject to the Terms of Use as given at the website.

Downloaded from Digital Engineering Library @ McGraw-Hill (www.digitalengineeringlibrary.com)
Copyright © 2004 The McGraw-Hill Companies. All rights reserved.
Any use is subject to the Terms of Use as given at the website.

Source: HANDBOOK OF PETROLEUM REFINING PROCESSES

CHAPTER 2.5
UOP ISOMAR PROCESS

Patrick J. Silady
UOP LLC
Des Plaines, Illinois

INTRODUCTION

The UOP Isomar* process is used to maximize the recovery of a particular xylene isomer from a mixture of C_8 aromatic isomers. The Isomar process is most often applied to *para*-xylene recovery, but it can be used to maximize the recovery of *ortho*-xylene or *meta*-xylene. The term *mixed xylenes* is used to describe a mixture of C_8 aromatic isomers containing a near-equilibrium distribution of *para*-xylene, *ortho*-xylene, *meta*-xylene, and ethylbenzene (EB). In the case of *para*-xylene recovery, a mixed-xylenes feed is charged to a UOP Parex* unit where the *para*-xylene isomer is preferentially extracted at 99.9 wt % purity and 97 wt % recovery per pass. The Parex raffinate is almost entirely depleted of *para*-xylene and is then sent to the Isomar unit (Fig. 2.5.1). The Isomar unit reestablishes a near-equilibrium distribution of xylene isomers, essentially creating additional *para*-xylene from the remaining *ortho* and *meta* isomers. Effluent from the Isomar unit is then recycled to the Parex unit for recovery of additional *para*-xylene. In this way, the *ortho* and *meta* isomers and EB are recycled to extinction. A complete description of the entire aromatics complex may be found in Chap. 2.1.

PROCESS CHEMISTRY

The two main categories of xylene isomerization catalysts are EB dealkylation catalysts and EB isomerization catalysts. The primary function of both catalyst types is to reestablish an equilibrium mixture of xylene isomers; however, they differ in how they handle the EB in the feed. An EB dealkylation catalyst converts EB to a valuable benzene coproduct. An EB isomerization catalyst converts EB to additional xylenes.

UOP offers both EB isomerization catalysts I-9,* I-210,* and I-400 and EB dealkylation catalysts I-300* and I-330.* Both types are bifunctional catalysts that have a balance of catalytic sites between zeolitic (acid) and metal functions. The acid function on each catalyst serves the same function: isomerization of xylenes.

The EB isomerization catalyst systems I-9 and I-210 isomerize EB to xylenes through a naphthene intermediate (Fig. 2.5.2). The metal function first saturates the EB to ethyl-

*Trademark and/or service mark of UOP LLC.

Downloaded from Digital Engineering Library @ McGraw-Hill (www.digitalengineeringlibrary.com)
Copyright © 2004 The McGraw-Hill Companies. All rights reserved.
Any use is subject to the Terms of Use as given at the website.

UOP ISOMAR PROCESS

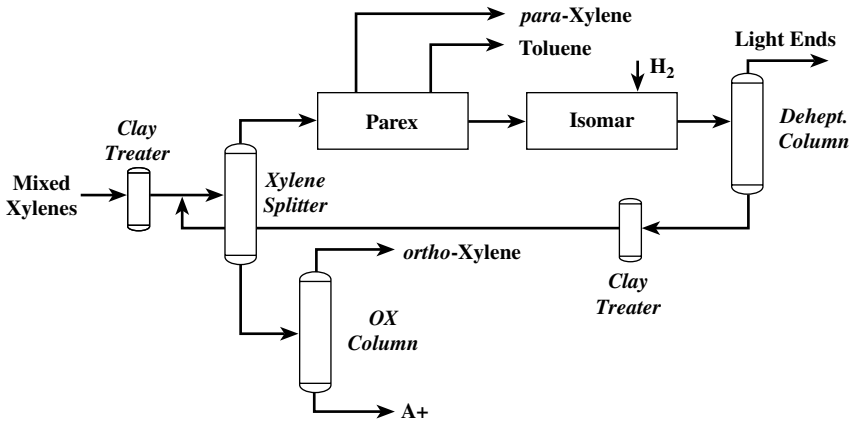

FIGURE 2.5.1 Typical Parex-Isomar loop.

cyclohexane, then the acid function isomerizes it to dimethylcyclohexane, and finally the metal function dehydrogenates the naphthene to xylene. Because the isomerization of EB is an equilibrium-limited reaction, the conversion of EB is usually limited to about 30 to 35 wt % per pass. In a typical aromatics complex using the I-9 catalyst, naphthenes are recycled to the Isomar unit through the xylene column and Parex unit to suppress the formation of naphthenes in the Isomar unit and thereby increase the yield of *para*-xylene from the complex.

UOP will be introducing I-400, a new EB isomerization catalyst, in 2003. I-400 will provide enhanced EB conversion, increased xylene yield over I-9 and I-210, while allowing longer processing cycles between regenerations.

The EB dealkylation catalyst systems I-300 and I-330 use an EB dealkylation mechanism in which the ethyl group is cleaved from the aromatic ring by the acid function of the catalyst (Fig. 2.5.3). This reaction is not equilibrium-limited, thereby allowing EB conversion of up to 70 wt % or greater per pass. Because this reaction does not involve a naphthene intermediate, C_8 naphthenes need not be recycled through the Parex-Isomar loop.

All xylene isomerization catalysts exhibit some by-product formation across the reactor. A large portion of the total feed to the Parex-Isomar loop is recycled from the Isomar unit. A typical Parex-Isomar loop is designed with a recycle/feed ratio of 2.5 : 3.5. By-product formation across the isomerization process is magnified accordingly. Therefore, a small reduction in the by-product formation across the Isomar reactor translates to a large, overall yield advantage. In the Isomar process, the precise level of expected by-product formation varies with catalyst type and operating severity, but it is normally in the range of 1.0 to 4.0 wt % per pass of the feed. The lower end of the range is representative of operation with the later-generation catalysts I-100, I-210, and I-300. The upper end of the range is representative of operation with the I-9 catalyst. By-products are predominantly aromatic, such that overall ring retention is greater than 99 percent. The proper selection of the isomerization catalyst type depends on the configuration of the aromatics complex, the composition of the feedstocks, and the desired product slate. The choice of isomerization catalyst must be based on an economic analysis of the entire aromatic complex. The C_8 fraction of the reformate from a typical petroleum naphtha contains approximately 15 to 17 wt % EB, but up to 30 wt % EB may be in a similar pyrolysis gasoline (pygas) fraction. Using an EB isomerization catalyst maximizes the yield of *para*-xylene from an aromatics complex by converting EB to xylenes. An EB isomerization catalyst is usually chosen

Downloaded from Digital Engineering Library @ McGraw-Hill (www.digitalengineeringlibrary.com)
Copyright © 2004 The McGraw-Hill Companies. All rights reserved.
Any use is subject to the Terms of Use as given at the website.

UOP ISOMAR PROCESS

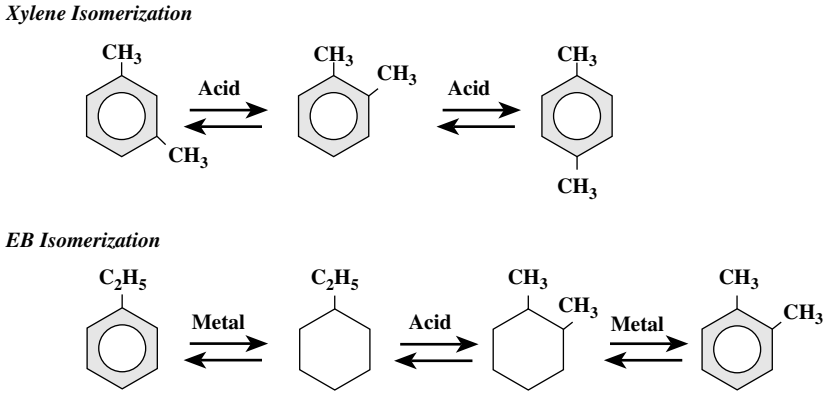

FIGURE 2.5.2 EB isomerization chemistry.

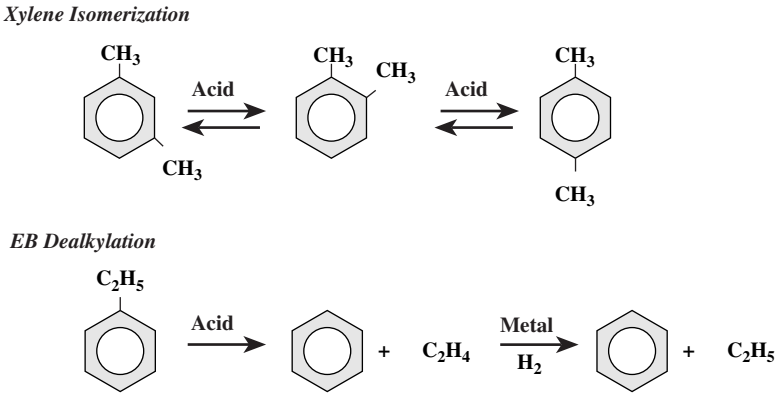

FIGURE 2.5.3 EB dealkylation chemistry.

when the primary goal of the complex is to maximize the production of *para*-xylene from a limited supply of feedstock. The EB isomerization catalyst system will also minimize the quantity of benzene by-product produced.

Alternatively, an EB dealkylation catalyst can be used to debottleneck an existing Parex unit or crystallizer by converting more EB per pass through the isomerization unit and eliminating the requirement for naphthene intermediate circulating around the Parex-Isomar loop. For a new aromatics complex design, using an EB dealkylation catalyst minimizes the size of the xylene column and Parex and Isomar units required to produce a given amount of *para*-xylene. However, this reduction in size of the Parex-Isomar loop comes at the expense of lower *para*-xylene yields, because all the EB in the feed is being converted to benzene rather than to additional *para*-xylene. Lower *para*-xylene yield means that more feedstock will be required, which increases the size of the CCR* Platforming,* Sulfolane,* and Tatoray units in the front end of the complex, as well as most of the fractionators.

*Trademark and/or service mark of UOP LLC.

Downloaded from Digital Engineering Library @ McGraw-Hill (www.digitalengineeringlibrary.com)
Copyright © 2004 The McGraw-Hill Companies. All rights reserved.
Any use is subject to the Terms of Use as given at the website.

UOP ISOMAR PROCESS

The EB dealkylation catalysts I-300 and I-330 are high-activity catalysts. As such, they can operate at higher space velocity, allowing a reduced catalyst loading for a given processing rate. Compared to its predecessor I-100, roughly one-half the amount of catalyst is needed. Unlike some EB dealkylation catalysts, I-300 and I-330 do not require continuous addition of ammonia to achieve desired activity and selectivity. Since 1999, I-300 catalysts have been loaded into a dozen units. I-300 exhibits highly stable performance with ongoing cycle lengths expected to reach 4 to 5 years without regeneration. I-330 provides enhanced benzene selectivity over a wide range of space velocities.

DESCRIPTION OF THE PROCESS FLOW

An Isomar unit is always combined with a recovery unit for one or more xylene isomers. Most often, the Isomar process is combined with the UOP Parex process for *para*-xylene recovery (Fig. 2.5.1). Fresh mixed-xylenes feed to the Parex-Isomar loop is sent to a xylene column, which can be designed either to recover *ortho*-xylene in the bottoms or to simply reject C_9+ aromatic components to meet feed specifications for the Parex unit. The xylene column overhead is then directed to the Parex unit where 99.9 wt % *para*-xylene is produced at 97 wt % recovery per pass. The Parex raffinate from the Parex unit, which contains less than 1 wt % *para*-xylene, is sent to the Isomar unit.

The feed to the Isomar unit is first combined with hydrogen-rich recycle gas and makeup gas to replace the small amount of hydrogen consumed in the Isomar reactor (Fig. 2.5.4). The combined feed is then preheated by exchange with the reactor effluent, vaporized in a fired heater, and raised to reactor operating temperature. The hot feed vapor is then sent to the reactor where it is passed radially through a fixed bed of catalyst. The reactor effluent is cooled by exchange with the combined feed and then sent to the product separator. Hydrogen-rich gas is taken off the top of the product separator and recycled to the reactor. A small portion of the recycle gas is purged to remove accumulated light ends from the recycle gas loop. Liquid from the bottom of the product separator is charged to the deheptanizer column. The C_7- overhead from the deheptanizer is cooled and separated into gas and liquid products. The deheptanizer overhead gas is exported to the fuel gas system. The overhead liquid is recycled to the Platforming unit so that any benzene in this stream may

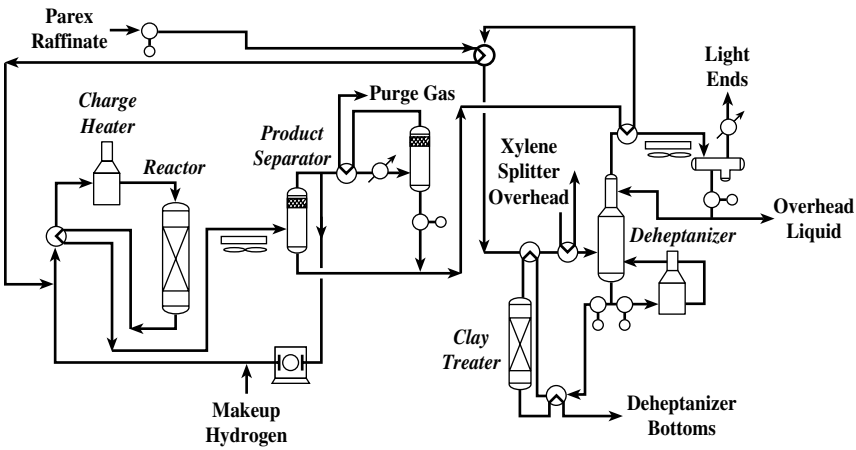

FIGURE 2.5.4 Isomar flow diagram.

Downloaded from Digital Engineering Library @ McGraw-Hill (www.digitalengineeringlibrary.com)
Copyright © 2004 The McGraw-Hill Companies. All rights reserved.
Any use is subject to the Terms of Use as given at the website.

UOP ISOMAR PROCESS

be recovered in the Sulfolane. The C_8+ fraction from the bottom of the deheptanizer is clay-treated, combined with fresh mixed-xylenes feed, and recycled to the xylene column.

FEEDSTOCK CONSIDERATIONS

The feedstock to an Isomar unit usually consists of raffinate from a Parex unit. At times, charging the fresh mixed-xylenes feed directly to the Isomar unit may be desirable; or the Isomar unit may be used in conjunction with fractionation to produce only *ortho*-xylene. In any case, the feed to an Isomar unit should meet the specifications outlined in Table 2.5.1.

Nonaromatic compounds in the feed to the Isomar unit are primarily cracked to light ends and removed from the Parex-Isomar loop. This ability to crack nonaromatic impurities eliminates the need for extracting the mixed xylenes, and consequently the size of the Sulfolane unit can be greatly reduced. In a UOP aromatics complex, the reformate from the CCR Platforming unit is split into C_7- and C_8+ fractions. The C_7- fraction is sent to the Sulfolane unit for recovery of high-purity benzene and toluene. The EB dealkylation catalysts I-300 and I-330 allow recovery of high-purity benzene by fractionation alone. Because modern, low-pressure CCR Platforming units operate at extremely high severity for aromatics production, the C_8+ fraction that is produced contains essentially no nonaromatic impurities and thus can be sent directly to the xylene recovery section of the complex.

PROCESS PERFORMANCE

The performance of the xylene isomerization catalysts can be measured in several specific ways, including the approach to equilibrium in the xylene isomerization reaction itself, the conversion of EB per pass, and the ring loss per pass. Approach to equilibrium is a measure of operating severity for an EB isomerization catalyst, and EB conversion is a measure of operating severity for an EB alkylation catalyst. For both catalyst types, ring loss increases with operating severity. In a *para*-xylene application, for example, high EB conversion in the Isomar unit is beneficial for the Parex unit but is accompanied by higher ring loss and thus lower overall yield of *para*-xylene from the complex.

Perhaps the best way to compare xylene isomerization catalyst is to measure the overall *para*-xylene yield from the Parex-Isomar loop. Figure 2.5.5 compares the *para*-xylene yield, based on fresh mixed-xylenes feed to the Parex-Isomar loop, for the I-9, I-300, and I-210 systems. The basis for the comparison is the flow scheme shown in Fig. 2.5.1. The composition of the mixed-xylenes feed is 17 wt % EB, 18 wt % *para*-xylene, 40 wt % *meta*-xylene, and 25 wt % *ortho*-xylene. The operating severity for the I-9 and I-210 catalysts is 22.1 wt % *para*-xylene in the total xylenes from the Isomar unit. The operating

TABLE 2.5.1 Isomar Feedstock Specifications

Contaminant	Effect	Limit
Water	Promotes corrosion, deactivates catalyst, irreversible	200 ppm, max.
Total chloride	Increases acid function, increases cracking, reversible	2 ppm, max.
Total nitrogen	Neutralizes acid sites, deactivates catalyst, irreversible	1 ppm, max.
Total sulfur	Attenuates metal activity, increases cracking, reversible	1 ppm, max.
Lead	Poisons acid and metal sites, irreversible	20 ppb, max.
Copper	Poisons acid and metal sites, irreversible	20 ppb, max.
Arsenic	Poisons acid and metal sites, irreversible	2 ppb, max.

Downloaded from Digital Engineering Library @ McGraw-Hill (www.digitalengineeringlibrary.com)
Copyright © 2004 The McGraw-Hill Companies. All rights reserved.
Any use is subject to the Terms of Use as given at the website.

UOP ISOMAR PROCESS

severity for the I-300 and I-330 catalysts is 65 wt % conversion of EB per pass. With the I-9 catalyst, the overall yield of *para*-xylene is 84 wt % of the fresh mixed-xylenes feed. Because they have lower ring loss per pass, the I-300 and I-330 catalysts exhibit a higher overall yield of benzene plus *para*-xylene, but the yield of *para*-xylene is only 76.5 wt %. Thus, more mixed xylenes are required to produce a target amount of *para*-xylene with the I-300 and I-330 catalysts.

Figure 2.5.5 also shows the yields for the UOP EB isomerization catalyst called I-210. The I-210 catalyst relies on the same reaction chemistry as I-9 but is more selective and exhibits lower by-product formation. The by-product formation of the I-210 catalyst is only about 1.5 wt % compared to 4 wt % for I-9. With the I-210 catalyst, the overall yield of *para*-xylene is 91 wt % of fresh mixed-xylenes feed, a yield improvement of 7 wt % over that of the I-9 catalyst.

EQUIPMENT CONSIDERATIONS

The charge heater is normally a radiant convection-type heater. The process stream is heated in the radiant section, and the convection section is used for a hot-oil system or steam generation. The heater can be designed to operate on either fuel gas or fuel oil, and each burner is equipped with a fuel gas pilot. A temperature controller at the heater outlet regulates the flow of fuel to the burners. Radiant-section tubes are constructed of 1.25% Cr-0.5% Mo. Tubes in the convection section are carbon steel.

The Isomar process normally uses a radial-flow reactor. The vapor from the charge heater enters the top of the reactor and is directed to the sidewall. The vapors then travel radially through a set of scallops, through the fixed bed, and into a center pipe. The reactor effluent then flows down through the center pipe to the reactor outlet. The advantage of the radial-flow reactor is low pressure drop, which is important in the Isomar process because the reaction rates are sensitive to pressure. Low pressure drop also reduces the power consumption of the recycle gas compressor. For I-300 and I-330 the operating pressure is directionally higher, and a downflow reactor configuration is more readily accommodated. The reactor is constructed of 1.25% chrome (Cr)-0.5% molybdenum (Mo) alloy.

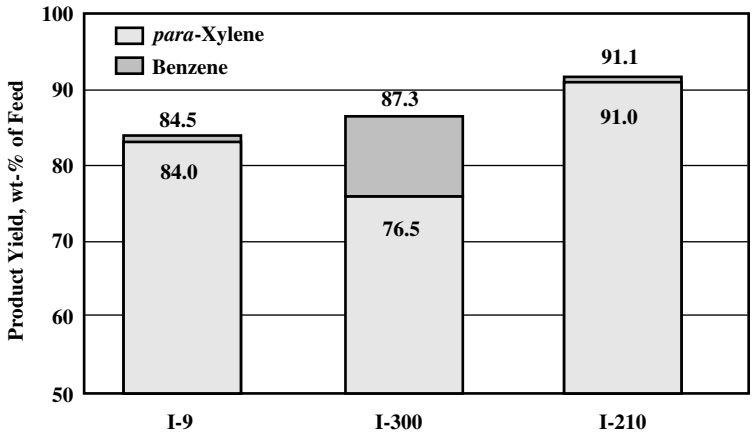

FIGURE 2.5.5 Parex-Isomar yields.

Downloaded from Digital Engineering Library @ McGraw-Hill (www.digitalengineeringlibrary.com)
Copyright © 2004 The McGraw-Hill Companies. All rights reserved.
Any use is subject to the Terms of Use as given at the website.

UOP ISOMAR PROCESS

The purpose of the product separator is to split the condensed reactor effluent into liquid product and hydrogen-rich recycle gas. The pressure in the product separator determines the pressure in the reactor. Separator pressure is regulated by controlling the rate of hydrogen makeup flow. Hydrogen purity in the recycle gas is monitored by a hydrogen analyzer at the recycle-gas compressor suction. When hydrogen purity gets too low, a small purge is taken from the recycle gas. The product separator is constructed of killed carbon steel.

The recycle gas compressor is usually of the centrifugal type and may be driven by an electric motor or a steam turbine. The compressor is provided with both seal oil and tube oil circuits and an automatic shutdown system to protect the machine against damage.

The purpose of the deheptanizer column is to remove light by-products from the reactor effluent. The deheptanizer usually contains 40 trays and incorporates a thermosiphon reboiler. Heat is usually supplied by the overhead vapor from the xylene column located upstream of the Parex unit. The deheptanizer column is constructed of carbon steel.

The combined feed-effluent exchanger is constructed of 1.25% Cr-0.5% Mo. Other heat exchangers in the Isomar unit are constructed of carbon steel.

CASE STUDY

A summary of the investment cost and the utility consumption for a typical Isomar unit is shown in Table 2.5.2. The basis for this case is an Isomar unit processing 5600 MT/day (40,000 BPD) of raffinate from a Parex unit. This case corresponds to the case study for an integrated UOP aromatics complex presented in Chap. 2.1. The investment cost is limited to the Isomar unit, deheptanizer column, and downstream clay treater. The estimated erected cost for the Isomar unit assumes construction on a U.S. Gulf Coast site in 2002. The scope of the estimate includes engineering, procurement, erection of equipment on site, and the initial load of catalyst.

COMMERCIAL EXPERIENCE

The first UOP Isomar unit went on-stream in 1967. Since that time, UOP has licensed a total of 54 Isomar units throughout the world. Fifty-two UOP Isomar units have been commissioned, and another two are in various stages of design and construction. UOP has offered both EB isomerization and EB dealkylation catalysts longer than any other licen-

TABLE 2.5.2 Investment Cost and Utility Consumption*

Estimated ISBL million cost $ U.S. (including initial catalyst inventory)	29.3
Utility consumption	
Electric power, kW	918
High-pressure steam, MT/h	16.9
Cooling water, m^3/h	236
Fuel fired, million kcal/h	20.8

*Basis: 5600 MT/h (40,000 BPD) Parex raffinate.

Note: MT/h = metric tons per hour; BPD = barrels per day.

Downloaded from Digital Engineering Library @ McGraw-Hill (www.digitalengineeringlibrary.com)
Copyright © 2004 The McGraw-Hill Companies. All rights reserved.
Any use is subject to the Terms of Use as given at the website.

UOP ISOMAR PROCESS

sor of xylene isomerization technology. This choice of catalyst coupled with the related operational experience and know-how gives UOP increased flexibility to design an aromatics complex to meet any customer's desired product distribution.

BIBLIOGRAPHY

Ebner, T. E.: "Improve Profitability with Advanced Aromatics Catalysts," UOP Seminar, EPTC Conference, Budapest, June 2002.

Ebner, T. E., K. M. O'Neil, and P. J. Silady: "UOP's New Isomerization Catalysts (I-300 Series)," American Institute of Chemical Engineers Spring Meeting, New Orleans, March 2002.

Jeanneret, J. J.: "Development in *p*-Xylene Technology," *DeWitt Petrochemical Review,* Houston, March 1993.

Jeanneret, J. J.: "*para*-Xylene Production in the 1990's," UOP Technology Conferences, various locations, March 1995.

Jeanneret, J. J., C. D. Low, and J. Swift: "Process for Maximum BTX Complex Profitability," *DeWitt Petrochemical Review,* Houston, September 1992.

Downloaded from Digital Engineering Library @ McGraw-Hill (www.digitalengineeringlibrary.com)
Copyright © 2004 The McGraw-Hill Companies. All rights reserved.
Any use is subject to the Terms of Use as given at the website.

Source: HANDBOOK OF PETROLEUM REFINING PROCESSES

CHAPTER 2.6
UOP PAREX PROCESS

Scott E. Commissaris
UOP LLC
Des Plaines, Illinois

INTRODUCTION

The UOP Parex* process is an innovative adsorptive separation method for the recovery of *para*-xylene from mixed xylenes. The term *mixed xylenes* refers to a mixture of C_8 aromatic isomers that includes ethylbenzene, *para*-xylene, *meta*-xylene, and *ortho*-xylene. These isomers boil so closely together that separating them by conventional distillation is not practical. The Parex process provides an efficient means of recovering *para*-xylene by using a solid zeolitic adsorbent that is selective for *para*-xylene. Unlike conventional chromatography, the Parex process simulates the countercurrent flow of a liquid feed over a solid bed of adsorbent. Feed and products enter and leave the adsorbent bed continuously at nearly constant compositions. This technique is sometimes referred to as *simulated moving-bed* (SMB) separation.

In a modern aromatics complex (Fig. 2.6.1), the Parex unit is located downstream of the xylene column and is integrated with a UOP Isomar* unit. The feed to the xylene column consists of the C_8+ aromatics product from the CCR* Platforming* unit together with the xylenes produced in the Tatoray unit. The C_8 fraction from the overhead of the xylene column is fed to the Parex unit, where high-purity para-xylene is recovered in the extract. The Parex raffinate is then sent to the Isomar unit, where the other C_8 aromatic isomers are converted to additional *para*-xylene and recycled to the xylene column. A complete description of the entire aromatics complex may be found in Chap. 2.1.

UOP Parex units are designed to recover more than 97 wt % of the *para*-xylene from the feed in a single pass at a product purity of 99.9 wt % or better. The Parex design is energy-efficient, mechanically simple, and highly reliable. On-stream factors for Parex units typically exceed 95 percent.

PAREX VERSUS CRYSTALLIZATION

Before the introduction of the Parex process, *para*-xylene was produced exclusively by fractional crystallization. In crystallization, the mixed-xylenes feed is refrigerated to

*Trademark and/or service mark of UOP.

Downloaded from Digital Engineering Library @ McGraw-Hill (www.digitalengineeringlibrary.com)
Copyright © 2004 The McGraw-Hill Companies. All rights reserved.
Any use is subject to the Terms of Use as given at the website.

UOP PAREX PROCESS

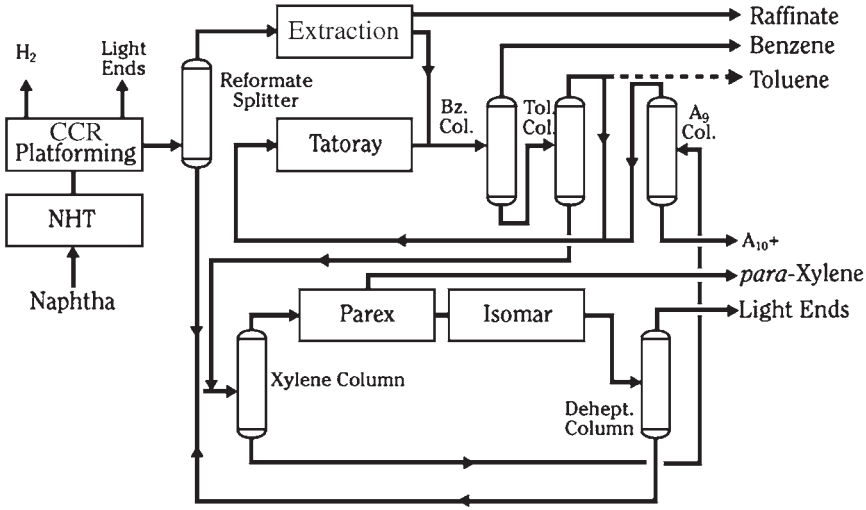

FIGURE 2.6.1 UOP aromatics complex—maximum *para*-xylene.

−75°C (−100°F), at which point the *para*-xylene isomer precipitates as a crystalline solid. The solid is then separated from the mother liquor by centrifugation or filtration. Final purification is achieved by washing the *para*- xylene crystals with either toluene or a portion of the *para*-xylene product.

Soon after it was introduced in 1971, the UOP Parex process quickly became the world's preferred technology for *para*-xylene recovery. Since that time, virtually all new *para*-xylene production capacity has been based on the UOP Parex process (Fig. 2.6.2).

The principal advantage of the Parex adsorptive separation process over crystallization technology is the ability of the Parex process to recover more than 97 percent of the *para*-xylene in the feed per pass. Crystallizers must contend with a eutectic composition limit that restricts *para*-xylene recovery to about 65 percent per pass. The implication of this difference is clearly illustrated in Fig. 2.6.3: A Parex complex producing 250,000 metric tons per annum (MTA) of *para*-xylene is compared with a crystallizer complex producing 168,000 MTA. The upper numbers in the figure indicate the flow rates through the Parex complex; the lower numbers indicate the flow rates through a comparable crystallizer complex. A Parex complex can produce about 50 percent more *para*-xylene from a given-size xylene column and isomerization unit than a complex using crystallization. In addition, the yield of *para*-xylene per unit of fresh feed is improved because a relatively smaller recycle flow means lower losses in the isomerization unit. The technologies could also be compared by keeping the *para*-xylene, product rate constant. In this case, a larger xylene column and a larger isomerization unit would be required to produce the same amount of *para*-xylene, thus increasing both the investment cost and the utility consumption of the complex.

A higher *para*-xylene recycle rate in the crystallizer complex not only increases the size of the equipment in the recycle loop and the utility consumption within the loop, but also makes inefficient use of the xylene isomerization capacity. Raffinate from a Parex unit is almost completely depleted of *para*-xylene (less than 1 wt %), whereas mother liquor from a typical crystallizer contains about 9.5 wt % *para*-xylene. Because the isomerization unit cannot exceed an equilibrium concentration of *para*-xylene (23 to 24 wt %), any *para*-xylene in the feed to the isomerization unit reduces the amount of *para*-xylene produced

Downloaded from Digital Engineering Library @ McGraw-Hill (www.digitalengineeringlibrary.com)
Copyright © 2004 The McGraw-Hill Companies. All rights reserved.
Any use is subject to the Terms of Use as given at the website.

UOP PAREX PROCESS

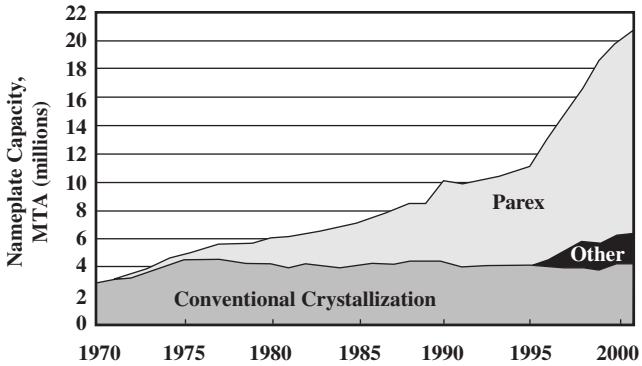

FIGURE 2.6.2 Total installed Parex capacity. In 2002, Parex represented 69 percent of the total capacity.

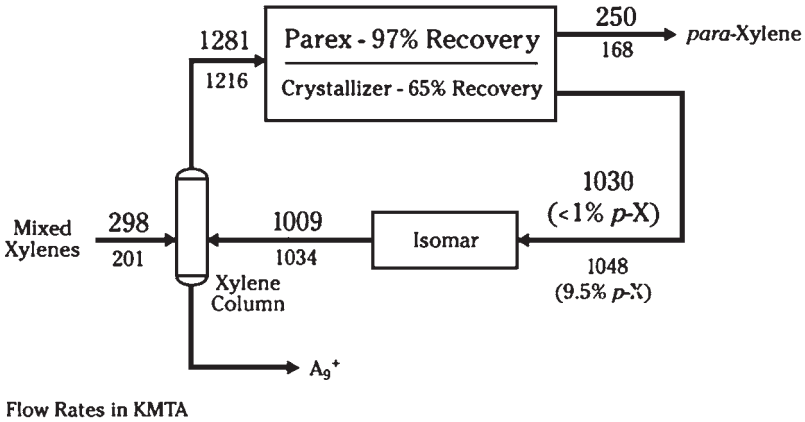

FIGURE 2.6.3 Comparison of Parex with crystallization.

in that unit per pass. Thus, the same isomerization unit produces about 60 percent more *para*-xylene per pass when processing Parex raffinate than it does when processing crystallizer mother liquor.

In 1997, UOP, Washington Group International, and Niro Process Technology recognized the value that the three companies could bring to the marketplace by consolidating their combined 80+ years of process design and know-how to reevaluate *para*-xylene production from a multidiscipline perspective. In 1998, this alliance introduced the HySorb XP process, a simplified, single-chamber, light desorbent adsorption process coupled with single-stage crystallization and Niro wash column technology. This combination of technologies when integrated into existing multistage crystallization facilities can increase *para*-xylene production by as much as 500 percent. The HySorb process produces a 95 wt % *para*-xylene concentrate, eliminating eutectic constraints and enabling single-stage crystallization recoveries above 90 percent at much improved utilities' consumption. *Para*-xylene production utilizing single-stage crystallization is categorized as "Other" in Fig. 2.6.2. Economic studies indicate that the HySorb XP configuration does not provide any

Downloaded from Digital Engineering Library @ McGraw-Hill (www.digitalengineeringlibrary.com)
Copyright © 2004 The McGraw-Hill Companies. All rights reserved.
Any use is subject to the Terms of Use as given at the website.

UOP PAREX PROCESS

cost or performance advantages relative to the Parex process for new grassroots designs or for expanding the production capacity of an existing Parex unit.

PROCESS PERFORMANCE

The quality of *para*-xylene demanded by the market has increased significantly over the last 20 years. When the Parex process was introduced in 1971, the standard purity for *para*-xylene sold in the market was 99.2 wt %. By 1992, the purity standard had become 99.7 wt %, and the trend toward higher purity continues. All Parex units built after 1991 are designed to produce 99.9 wt % pure *para*-xylene at 97 wt % recovery per pass. Most older Parex units can also be modified to produce 99.9 wt % purity.

FEEDSTOCK CONSIDERATIONS

Most of the mixed xylenes used for *para*-xylene production are produced from petroleum naphtha by catalytic reforming. Modern UOP CCR Platforming units operate at such high severity that the C_8+ fraction of the reformate contains virtually no nonaromatic impurities. As a result, these C_8 aromatics can be fed directly to the xylene recovery section of the complex. In many integrated aromatics complexes, up to one-half of the total mixed xylenes are produced from the conversion of toluene and C_9 aromatics in a UOP Tatoray unit.

Nonaromatic impurities in the feed to a Parex unit increase utility consumption and take up space in the Parex unit, but they do not affect the purity of the *para*-xylene product or the recovery performance of the Parex unit.

Feedstocks for Parex must be prefractionated to isolate the C_8 aromatic fraction and clay-treated to protect the adsorbent. If the Parex unit is integrated with an upstream refinery or ethylene plant, prefractionation and clay treating are designed into the complex. If additional mixed xylenes are purchased and transported to the site, they must first be stripped, clay-treated, and rerun before being charged to the Parex unit. In general, feed to a Parex unit should meet the specifications outlined in Table 2.6.1.

DESCRIPTION OF THE PROCESS FLOW

The flow diagram for a typical Parex unit is shown in Fig. 2.6.4. The separation takes place in the adsorbent chambers. Each adsorbent chamber is divided into a number of adsorbent beds. Each bed of adsorbent is supported from below by specialized internals that are designed to produce highly efficient flow distribution. Each internals assembly is connected to the rotary valve by a "bed line." The internals between each adsorbent bed are used to inject or withdraw liquid from the chamber and simultaneously collect liquid from the bed above and redistribute the liquid over the bed below.

The Parex process is one member of UOP's family of Sorbex* adsorptive separation processes. The basic principles of Sorbex technology are the same regardless of the type of separation being conducted and are discussed in Chap. 10.3. The number of adsorbent beds and bed lines varies with each Sorbex application. A typical Parex unit has 24 adsor-

*Trademark and/or service mark of UOP.

Downloaded from Digital Engineering Library @ McGraw-Hill (www.digitalengineeringlibrary.com)
Copyright © 2004 The McGraw-Hill Companies. All rights reserved.
Any use is subject to the Terms of Use as given at the website.

UOP PAREX PROCESS

TABLE 2.6.1 Parex Feedstock Specifications

Property	Specification
p-Xylene, min, wt %	18
Ethylbenzene, max., wt %	20
Toluene, max., wt %	0.5
C_9 and higher-boiling aromatic hydrocarbons, max., wt %	1.5
Nonaromatic hydrocarbons, max., wt %	0.3
Nitrogen, max., mg/kg	1.0
Sulfur, max., mg/kg	1.0
Acidity	No free acid
Appearance	*
Relative density, 15.56/15.56°C or	0.865–0.875
Density, 20°C, g/cm^3	0.862–0.872
Color, max. Pt/Co scale	20
Distillation range, at 101.3 kPa (760 mmHg) pressure, max., °C	5
Initial distillation temperature, min., °C	137
Dry point, max., °C	143

*Clear liquid free of sediment and haze when observed at 18.3 to 25.6°C (65 to 78°F).

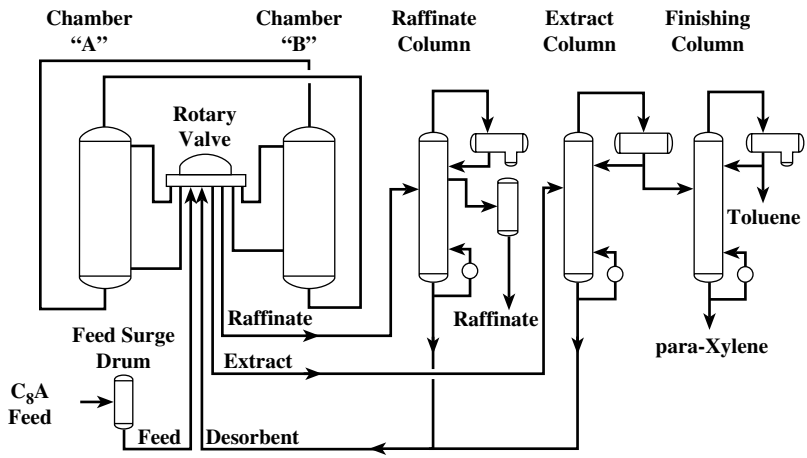

FIGURE 2.6.4 Parex flow diagram.

bent beds and 24 bed lines connecting the beds to the rotary valve. Because of practical construction considerations, most Parex units consist of two adsorption chambers in series with 12 beds in each chamber.

The Parex process has four major streams that are distributed to the adsorbent chambers by the rotary valve. These *net* streams include

- *Feed in:* mixed-xylenes feed

Downloaded from Digital Engineering Library @ McGraw-Hill (www.digitalengineeringlibrary.com)
Copyright © 2004 The McGraw-Hill Companies. All rights reserved.
Any use is subject to the Terms of Use as given at the website.

- *Dilute extract out: para*-xylene product diluted with desorbent
- *Dilute raffinate out:* ethylbenzene, *meta*-xylene, and *ortho*-xylene diluted with desorbent
- *Desorbent in:* recycle desorbent from the fractionation section

At any given time, only four of the bed lines actively carry the net streams into and out of the adsorbent chamber. The rotary valve is used to periodically switch the positions of the liquid feed and withdrawal points as the composition profile moves down the chamber. A pump provides the liquid circulation from the bottom of the first adsorbent chamber to the top of the second. A second pump provides circulation from the bottom of the second adsorbent chamber to the top of the first. In this way, the two adsorbent chambers function as a single, continuous loop of adsorbent beds.

The dilute extract from the rotary valve is sent to the extract column for separation of the extract from the desorbent. The overhead from the extract column is sent to a finishing column, where the highly pure *para*-xylene product is separated from any toluene that may have been present in the feed.

The dilute raffinate from the rotary valve is sent to the raffinate column for separation of the raffinate from the desorbent. The overhead from the raffinate column contains the unextracted C_8 aromatic components: ethylbenzene, *meta*-xylene, and *ortho*-xylene, together with any nonaromatics that may have been present in the feed. The raffinate product is then sent to an isomerization unit, where additional *para*-xylene is formed, and then recycled to the Parex unit.

The desorbent from the bottom of both the extract and raffinate columns is recycled to the adsorbent chambers through the rotary valve. Any heavy contaminants in the feed accumulate in the desorbent. To prevent this accumulation, provision is made to take a slipstream of the recycle desorbent to a small desorbent rerun column, where any heavy contaminants are rejected. During normal operation, mixed xylenes are stripped, clay-treated, and rerun prior to being sent to the Parex unit. Thus, few heavy contaminants need to be removed from the bottom of the desorbent rerun column.

EQUIPMENT CONSIDERATIONS

UOP supplies a package of specialized equipment that is considered critical for the successful performance of the Parex process. This package includes the rotary valve; the adsorbent chamber internals; and the control system for the rotary valve, pumparound pump, and net flows. The erected cost estimates that UOP provides for the Parex process include the cost of this equipment package.

The rotary valve is a sophisticated, highly engineered piece of process equipment developed by UOP specifically for the Sorbex family of processes. The UOP rotary valve is critical for the purity of the *para*-xylene product and for the unsurpassed reliability of the Parex process. The design of the UOP rotary valve has evolved over 40 years of commercial Sorbex operating experience.

The adsorbent chamber internals are also critical to the performance of the Parex process. These specialized internals are used to support each bed of adsorbent and to prevent leakage of the solid adsorbent into the process streams. Each internals assembly also acts as a flow collector and distributor and is used to inject or withdraw the net flows from the adsorbent chamber or redistribute the internal liquid flow from one adsorbent bed to the next. As the size of Parex units has increased over the years, the design of adsorbent chamber internals has evolved to ensure proper flow distribution over increasingly larger-diameter vessels.

Downloaded from Digital Engineering Library @ McGraw-Hill (www.digitalengineeringlibrary.com)
Copyright © 2004 The McGraw-Hill Companies. All rights reserved.
Any use is subject to the Terms of Use as given at the website.

UOP PAREX PROCESS

The Parex control system supplied by UOP is a specialized system that monitors and controls the flow rates of the net streams and adsorbent chamber circulation and ensures proper operation of the rotary valve.

Because of the mild operating conditions used in the Parex process, the entire plant may be constructed of carbon steel.

The Parex process is normally heat-integrated with the upstream xylene column. The xylene column is used to rerun the feed to the Parex unit. The mixed xylenes are taken overhead, and the heavy aromatics are removed from the bottom of the column. Before the overhead vapor from the xylene column is fed to the adsorption section of the Parex unit, it is used to reboil the extract and raffinate columns of the Parex unit.

UOP offers High Flux* high-performance heat-exchanger tubing for improved heat-exchange efficiency. High Flux tubing is made with a special coating that promotes nucleate boiling and increases the heat-transfer coefficient of conventional tubing by a factor of 10. Specifying UOP High Flux tubing for the reboilers of the Parex fractionators reduces the size of the reboilers and may also allow the xylene column to be designed for lower-pressure operation. Designing the xylene column for lower pressure reduces the erected cost of the column and lowers the utility consumption in that column.

UOP also offers MD* distillation trays for improved fractionation performance. The MD trays are used for large liquid loads and are especially effective when the volumetric ratio between vapor and liquid rates is low. The use of MD trays provides a large total weir length and reduces froth height on the tray. Because the froth height is lower, MD trays can be installed at a smaller tray spacing than conventional distillation trays. The use of MD trays in new column designs results in a smaller required diameter and lower column height. Consequently, MD trays are often specified for large xylene columns, especially when the use of MD trays can keep the design of the xylene column in a single shell.

CASE STUDY

A summary of the investment cost and utility consumption for a typical Parex unit is shown in Table 2.6.2. The basis for this case is a Parex unit producing 700,000 MTA of 99.9 wt % pure *para*-xylene product. This case corresponds to the case study for an integrated UOP aromatics complex presented in Chap. 2.1. Because the Parex unit is tightly heat-integrated with the upstream xylene column, the investment cost and utility consumption estimates include both. The estimated erected costs for these units assume construction on a U.S. Gulf Coast site in 2002. The scope of the estimate includes engineering, procurement, erection of equipment on the site, and the initial inventory of Parex adsorbent and desorbent.

COMMERCIAL EXPERIENCE

UOP's experience with adsorptive separations is extensive. Sorbex technology, which was invented by UOP in the 1960s, was the first large-scale commercial application of continuous adsorptive separation. The first commercial Sorbex unit, a Molex* unit for the separation of linear paraffins, came on-stream in 1964. The first commercial Parex unit came

*Trademark and/or service mark of UOP.

Downloaded from Digital Engineering Library @ McGraw-Hill (www.digitalengineeringlibrary.com)
Copyright © 2004 The McGraw-Hill Companies. All rights reserved.
Any use is subject to the Terms of Use as given at the website.

UOP PAREX PROCESS

TABLE 2.6.2 Investment Cost and Utility Consumption*

Estimated erected cost, million $ U.S.:	
Xylene column	32
Parex unit	98
Utility consumption:	
Electric power, kW	5300
Medium-pressure steam, MT/h (klb/h)	20 (credit 44.05)
Cooling water, m^3/h (gal/min)	174 (766)
Fuel fired, million kcal/h (million Btu/h)	125 (497)

*Basis: 700,000 MTA of *para*-xylene product

on-stream in 1971. UOP has licensed more than 100 Sorbex units throughout the world. This total includes 73 Parex units, of which 71 units are in operation and 2 others are in various stages of design and construction. UOP Parex units range in size from 24,000 MTA of *para*-xylene product to more than 700,000 MTA.

BIBLIOGRAPHY

Jeanneret, J. J.: "Developments in *p*-Xylene Technology," *DeWitt Petrochemical Review,* Houston, March 1993.

Jeanneret, J. J.: "*para*-Xylene Production in the 1990s," UOP Technology Conferences, various locations, May 1995.

Jeanneret, J. J., C. D. Low, and V. Zukauskas: "New Strategies Maximize *para*-Xylene Production," *Hydrocarbon Processing,* June 1994.

Prada, R. E., et al.: "Parex Developments for Increased Efficiency," UOP Technology Conferences, various locations, September 1992.

Downloaded from Digital Engineering Library @ McGraw-Hill (www.digitalengineeringlibrary.com)
Copyright © 2004 The McGraw-Hill Companies. All rights reserved.
Any use is subject to the Terms of Use as given at the website.

Source: HANDBOOK OF PETROLEUM REFINING PROCESSES

CHAPTER 2.7
UOP TATORAY PROCESS

Antoine Negiz and Thomas J. Stoodt
UOP LLC
Des Plaines, Illinois

INTRODUCTION

An aromatics complex is a combination of process units which are used to convert petroleum naphtha and pyrolysis gasoline to the basic petrochemical intermediates: benzene, toluene, and xylenes (BTX). Details of the aromatic complex are discussed in greater depth in Chap. 2.1. A fully integrated modern complex designed to produce benzene, *para*-xylene (PX), and sometimes *ortho*-xylene includes UOP's Tatoray process. A simplified flow diagram of a typical aromatics complex designed for maximum production of PX is shown in Fig. 2.7.1. The Tatoray process is integrated between the aromatics extraction and xylene recovery sections of the plant (Fig. 2.7.1). Toluene (A_7) is fed to the Tatoray unit rather than being blended into the gasoline pool or sold for solvent applications. If the goal is to maximize the production of PX from the complex, the C_9 aromatic (A_9) by-product can also be fed to the Tatoray unit rather than blending it into the gasoline pool. Processing A_9-A_{10} in a Tatoray unit shifts the chemical equilibrium in the unit toward decreased benzene production and increased production of xylenes.

The Tatoray process provides an ideal way of producing additional mixed xylenes from low-value toluene and heavy aromatics. What is seldom recognized, however, is where the xylenes are produced within the complex. For an aromatics complex that includes transalkylation, approximately 50 percent of the xylenes in the complex come from the transalkylation reaction, that is, the Tatoray process. The reformate provides approximately 45 percent, and 5 percent comes from C_8 aromatic isomerization such as the Isomar process, via conversion of ethylbenzenes to xylenes. The Tatoray process produces an equilibrium mixture of xylenes plus ethylbenzene. The xylenes are recovered and isomerized to PX while the ethylbenzene can also be converted to xylenes. The incorporation of a Tatoray unit to an aromatics complex can more than double the yield of PX from naphtha feedstock. It is extremely important, when looking at improving xylene production economics, that one focus not only on the reformer, but also on the transalkylation process and its performance. There are a number of different strategies that producers are pursuing to increase profitability. Two in particular are to reduce feedstock consumption (and the associated cost) and upgrade by-products to increase their sale value. Transalkylation can play a key role in both strategies.

Downloaded from Digital Engineering Library @ McGraw-Hill (www.digitalengineeringlibrary.com)
Copyright © 2004 The McGraw-Hill Companies. All rights reserved.
Any use is subject to the Terms of Use as given at the website.

UOP TATORAY PROCESS

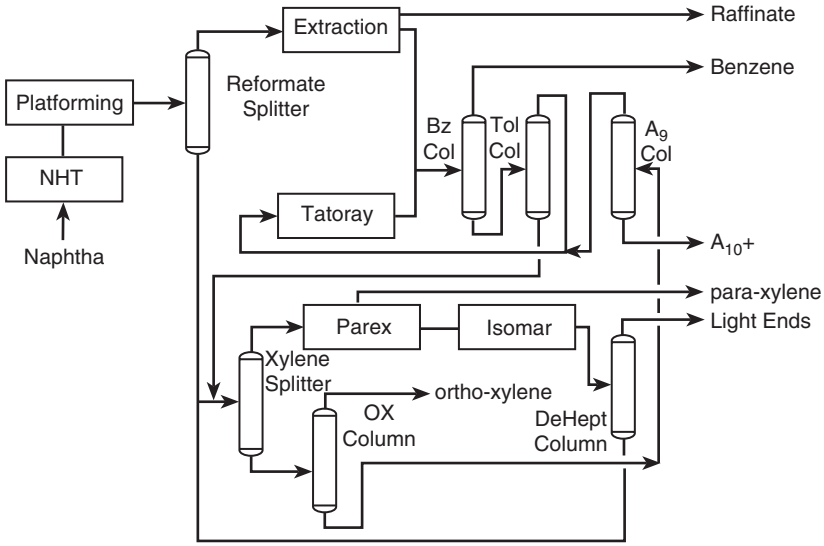

FIGURE 2.7.1 Typical UOP aromatics complex.

PROCESS CHEMISTRY

The two major reactions in the Tatoray process, disproportionation and transalkylation, are illustrated in Fig. 2.7.2. The conversion of toluene alone to an equilibrium mixture of benzene and xylenes is called *disproportionation.* The conversion of a blend of toluene and A_9 to xylenes through the migration of methyl groups between methyl-substituted aromatics is called *transalkylation.* In general, both reactions proceed toward an equilibrium distribution of benzene and alkyl-substituted aromatics. Methyl groups are stable at Tatoray reaction conditions, and thus the reaction equilibrium is easy to estimate when the feed consists of all methyl-substituted aromatics. The equilibrium distribution is illustrated in Fig. 2.7.3. The reaction pathways involving A_9 for the Tatoray process have also been described elsewhere.[1]

More complex reaction pathways occur when other alkyl groups are present in the feed. The Tatoray process effectively converts the ethyl, propyl, and higher alkyl group substituted A_9-A_{10} to lighter single-ring aromatics via dealkylation, while preserving the methyl groups. The lighter, mostly methyl-substituted, aromatics proceed with transalkylation to produce benzene and xylenes in a yield pattern governed by equilibrium. The dealkylation reactions involving propyl and higher substituted groups typically proceed to completion. It is also known that the diffusion coefficients of ethyl and higher alkyl group substituted rings in some aluminosilicates are much lower than those of the methyl-only substituted rings.[2] The Tatoray catalyst enhances the transport properties of the reactants, thereby increasing the reaction efficiency.

The TA series of catalysts was first commercialized in 1969. A new generation has been introduced, on average, every 6 years. UOP introduced TA-4 in 1988. Tatoray licensees are very familiar with TA-4 catalyst and have experienced its ruggedness and ability to handle a wide variety of operating conditions while maintaining performance. The catalyst demonstrates superior selectivity and stability over a wide range of feed rates and feed compositions. High per pass conversion to benzene and mixed xylenes established TA-4 as economically attractive.

Downloaded from Digital Engineering Library @ McGraw-Hill (www.digitalengineeringlibrary.com)
Copyright © 2004 The McGraw-Hill Companies. All rights reserved.
Any use is subject to the Terms of Use as given at the website.

UOP TATORAY PROCESS

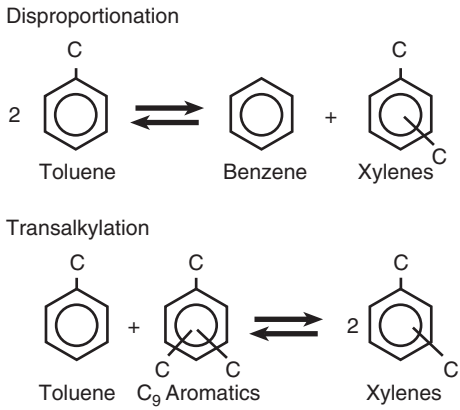

FIGURE 2.7.2 Major Tatoray reactions.

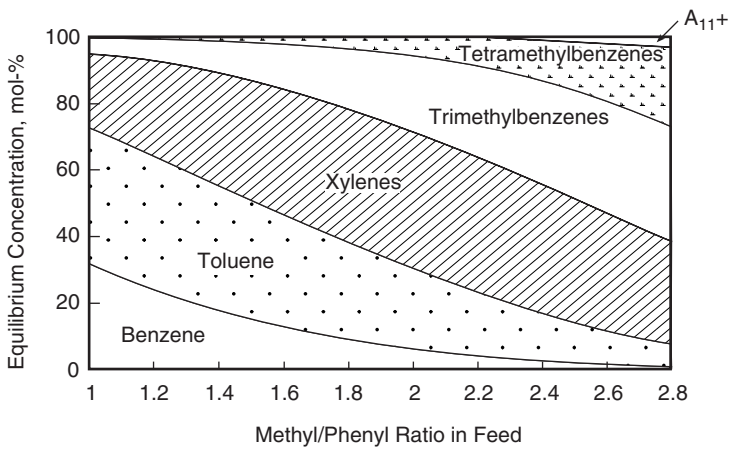

FIGURE 2.7.3 Equilibrium distribution of methyl groups at 700 K.

The most recent Tatoray catalyst to be successfully commercialized is called TA-5.[3] This catalyst was designed as a "drop-in" reload catalyst for service in the Tatoray process and was commercialized in October 2000. The stability of TA-5 catalyst is more than double that of TA-4. This results in improved on-stream efficiency and a reduction in regeneration frequency. Commercial units have also shown that the activity of TA-5 is at least 50 percent better than that of TA-4, allowing users to potentially increase throughput while maintaining current cycle lengths. Alternatively, users can use the TA-5 catalyst to process heavier aromatic feeds to produce higher-value benzene and mixed-xylenes products.

Figure 2.7.4 illustrates the relative performance of TA-5 versus TA-4 in terms of activity and stability. This information is based on data from a commercial unit that has been running with TA-5 since October 2000. Prior to the reload of TA-5 catalyst, this unit was loaded with TA-4. This unit has continuously processed significantly more feed at a substantially lower hydrogen/hydrocarbon mole ratio.

Downloaded from Digital Engineering Library @ McGraw-Hill (www.digitalengineeringlibrary.com)
Copyright © 2004 The McGraw-Hill Companies. All rights reserved.
Any use is subject to the Terms of Use as given at the website.

UOP TATORAY PROCESS

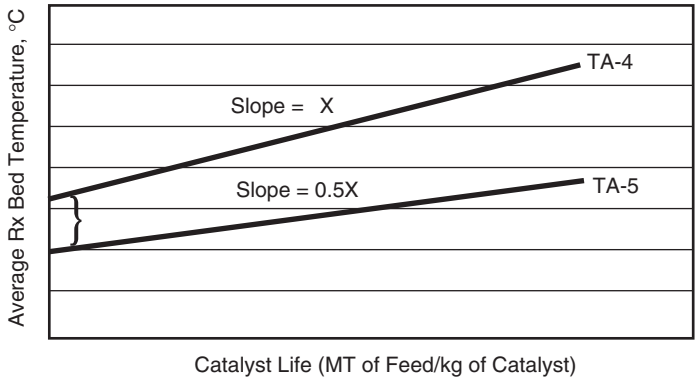

FIGURE 2.7.4 TA-5 stability and activity.

TA-5 catalyst provides significant advantages over other catalysts:

- *Higher stability.* Figure 2.7.4 clearly illustrates the stability of TA-5 catalyst versus TA-4 catalyst. The slope of the curves shows TA-5 catalyst to be twice as stable as TA-4 catalyst. This means a reduction in regeneration frequency that results in improved on-stream efficiency.
- *Higher activity.* The 50 percent higher activity translates to increased throughput or lower hydrogen to hydrocarbon ratios while maintaining the same cycle length. Alternatively, the amount of heavy aromatics charged to the Tatoray unit can be increased to maximize PX production from the complex while maintaining stability.
- *No process modification required.* With the same throughput across the reactor, at the same operating pressure levels and H_2/HC ratio as TA-4 catalyst, no process modifications are required to use TA-5 catalyst.
- *High conversion and high yield.* TA-5 catalyst provides the high conversion and yields obtained using TA-4 catalyst.
- *Contains no precious metals.* The TA-5 catalyst contains no precious metals.
- *Benzene purity.* The quality of the benzene produced depends on the feed composition. In many applications, TA-5 catalyst delivers high quality benzene product which does not require purification by extraction.
- *Regenerability.* It shows complete recovery of activity, yields, and stability.
- *UOP's commercial experience and technical support.* UOP's commercial experience, comprehensive guarantees, technical service, and state-of-the-art research facilities ensure that the customer will achieve optimal catalyst performance of the Tatoray process unit. The experience gained from the large installed capacity and the success of the TA series catalysts installed in these units help ensure that future reloads will also be a success.

DESCRIPTION OF THE PROCESS FLOW

The Tatoray process uses a very simple flow scheme consisting of a fixed-bed reactor and a product separation section (Fig. 2.7.5). The fresh feed to the Tatoray unit is first com-

Downloaded from Digital Engineering Library @ McGraw-Hill (www.digitalengineeringlibrary.com)
Copyright © 2004 The McGraw-Hill Companies. All rights reserved.
Any use is subject to the Terms of Use as given at the website.

UOP TATORAY PROCESS

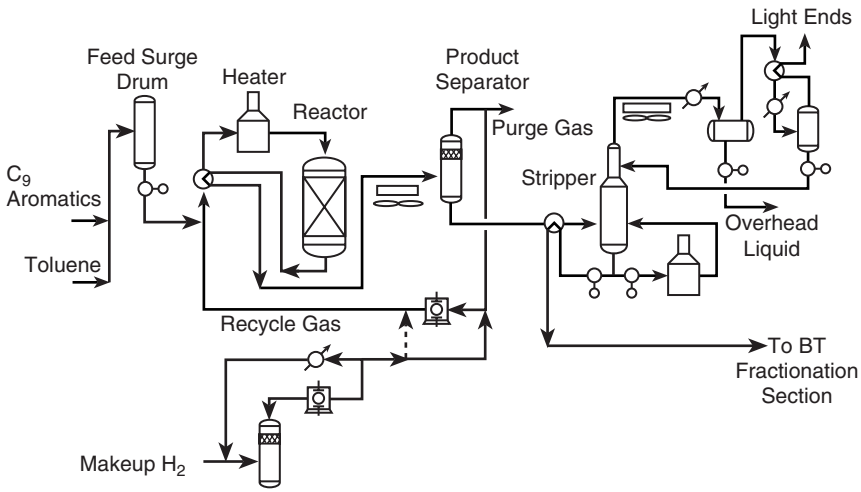

FIGURE 2.7.5 Tatoray flow diagram.

bined with hydrogen-rich recycle gas, preheated by exchange with the hot reactor effluent, and then raised to reaction temperature in a fired heater. The combined feed vapor is then sent to the reactor where it is processed downflow over a fixed bed of catalyst. The reactor effluent is then cooled by exchange with the combined feed and a product condenser and is sent to a product separator. Hydrogen-rich gas is taken off the top of the separator, where a small portion of it is purged to remove accumulated light ends from the recycle gas loop. It is then mixed with makeup gas and recycled to the reactor. Liquid from the bottom of the separator is sent to a stripper column. The overhead from the stripper is cooled and separated into gas and liquid products. The stripper overhead gas is exported to the fuel gas system. The overhead liquid is recycled to the Platforming unit debutanizer column so that any benzene in this stream may be recovered to the extraction and or in the BT separation section of the aromatics complex. The benzene and xylene products, together with the unreacted toluene and C_9+ aromatics, are taken from the bottom of the stripper and recycled to the BT fractionation section of the aromatics complex.

Because of the dealkylation reaction pathway, the reactor section of the Tatoray process is maintained in a hydrogen atmosphere even though no net hydrogen is consumed in the transalkylation reactions. In practice, a small amount of hydrogen is always consumed due to the dealkylation side reactions. Hydrogen consumption increases for heavier feedstocks since these generally contain heavier alkyl groups, typically C_3 and C_4.

FEEDSTOCK CONSIDERATIONS

The feed to a Tatoray unit is typically a blend of toluene and A_9-A_{10} derived from reformate. UOP also has experience with pygas-derived A_9-A_{10} blends with reformate. Figure 2.7.6 shows typical yields on fresh feedstocks ranging from 100 wt % toluene to 100 wt % A_9. As shown in Fig. 2.7.6, the product composition shifts away from benzene and toward xylenes as the A_9 concentration in the feed increases. Saturates in the feed are generally cracked to propane and butane. For this reason, a limitation on saturates in the feed

Downloaded from Digital Engineering Library @ McGraw-Hill (www.digitalengineeringlibrary.com)
Copyright © 2004 The McGraw-Hill Companies. All rights reserved.
Any use is subject to the Terms of Use as given at the website.

UOP TATORAY PROCESS

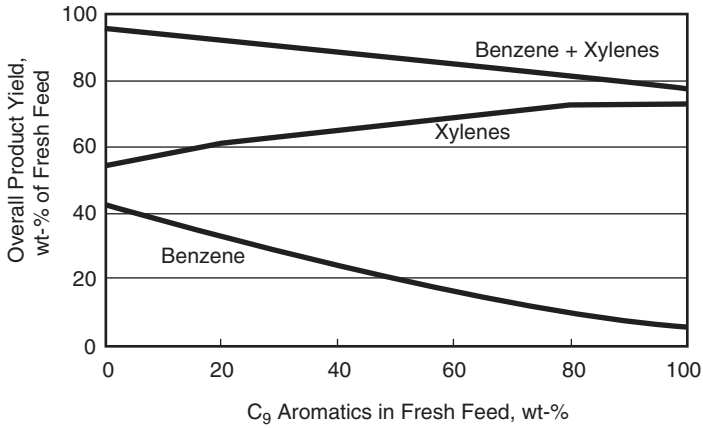

FIGURE 2.7.6 Tatoray yield structure as a function of A_9 concentration in feed.

is usually specified. In general, feed to a Tatoray unit should meet the specifications outlined in Table 2.7.1.

PROCESS PERFORMANCE

The ability to process A_9-A_{10} in a Tatoray unit can make more feedstock available for xylenes production and dramatically shifts the selectivity of the unit toward decreased benzene and increased production of xylenes. A typical aromatics complex without a Tatoray unit can produce approximately 200,000 MTA of PX from 25,000 BPD of Light Arabian naphtha (160 to 300°F ASTM Distillation). If a toluene-only Tatoray unit is added to the complex, the same 25,000 BPD of naphtha can produce 280,000 MTA of PX, an increase of 40 percent. When an A_7/A_9-A_{10} Tatoray unit is added to the complex, the endpoint of the feed naphtha can be increased from 300 to 340°F in order to maximize the amount of A_9-A_{10} precursors in the feed. If we keep the feed rate to the reformer constant, 25,000 BPD of this heavier naphtha will produce about 420,000 MTA of PX, an increase of 110 percent over the base complex (Fig. 2.7.7).

The maximum theoretical conversion per pass is limited by equilibrium and is a function of the feedstock composition. For example, theoretical conversion for a pure toluene feed is approximately 59 wt % per pass. Operating at high conversion minimizes the amount of unconverted material that must be recycled through the BT fractionation section of the complex. A smaller recycle stream minimizes the size of the benzene and toluene columns, minimizes the size of the Tatoray unit, and minimizes the utility consumption in all these units. Tatoray units are designed and operated to provide a range of conversions, depending on desired production rates, feedstock and utility values, and capital sensitivity.

EQUIPMENT CONSIDERATIONS

Because the Tatoray process uses relatively mild operating conditions, special construction materials are not required. The simplicity of the process design and the use of conventional

Downloaded from Digital Engineering Library @ McGraw-Hill (www.digitalengineeringlibrary.com)
Copyright © 2004 The McGraw-Hill Companies. All rights reserved.
Any use is subject to the Terms of Use as given at the website.

UOP TATORAY PROCESS

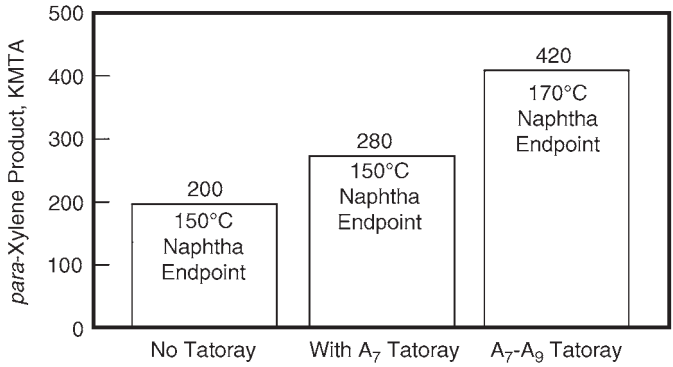

Basis: 985 KMTA (25,000 BPD),
Light Arabian Naphtha

FIGURE 2.7.7 Maximum *para*-xylene yield with Tatoray.

metallurgy result in low capital investment and maintenance expenses for the Tatoray process. The simple design of the Tatoray process also makes it ideal for the conversion of existing reformers, hydrodealkylation units, and hydrotreaters to Tatoray service. To date, two idle reforming units, two hydrodealkylation units, and one hydrodesulfurization unit have been successfully converted to service as Tatoray units.

The charge heater is normally a radiant-convection-type heater. The process stream is heated in the radiant section, and the convection section is used for a hot-oil system or for steam generation. The heater can be designed to operate on either fuel gas or fuel oil, and each burner is equipped with a fuel-gas pilot. A temperature controller at the heater outlet regulates the flow of fuel to the burners. Radiant-section tubes are constructed of 1.25% Cr and 0.5% Mo. Tubes in the convection section are carbon steel.

The Tatoray process uses a simple downflow, fixed-bed, vapor-phase reactor. The reactor is constructed of 1.25% Cr-0.5% Mo.

The purpose of the product separator is to split the condensed reactor effluent into liquid product and hydrogen-rich recycle gas. The pressure in the product separator determines the pressure in the reactor. Product separator pressure is regulated by controlling the rate of hydrogen makeup flow. Hydrogen purity in the recycle gas is monitored by a hydrogen analyzer at the recycle gas compressor suction. When hydrogen purity gets too low, a small purge is taken from the recycle gas. The product separator is constructed of killed carbon steel.

The recycle gas compressor is usually of the centrifugal type and may be driven by an electric motor or a steam turbine. The compressor is provided with both a seal-oil and lube-oil circuit and an automatic shutdown system to protect the machine against damage.

The stripper column is used to remove light by-products from the product separator liquid. The stripper column usually contains 40 trays and incorporates a thermosiphon reboiler. Heat is usually supplied by the overhead vapor from the xylene column located upstream of the Parex unit. The stripper column is constructed of carbon steel.

The combined feed exchanger is constructed of 1.25% Cr-0.5% Mo. Other heat exchangers are constructed of carbon steel.

Downloaded from Digital Engineering Library @ McGraw-Hill (www.digitalengineeringlibrary.com)
Copyright © 2004 The McGraw-Hill Companies. All rights reserved.
Any use is subject to the Terms of Use as given at the website.

TABLE 2.7.1 Tatoray Feedstock Specifications

Contaminant	Effect	Limit
Nonaromatics	Increased cracking, increased H_2 consumption, lower benzene purity	2 wt % max.
Water	Depresses transalkylation activity; reversible	50 ppm max.
Olefins	Promotes deposition of coke on catalyst	20 BI* max.
Total chloride	Promotes cracking of aromatic rings; reversible	1 ppm max.
Total nitrogen	Neutralizes active catalyst sites; irreversible	0.1 ppm max.
Total sulfur	Affects quality of the benzene product	1 ppm max.

*Bromine index

TABLE 2.7.2 Investment Cost and Utility Consumption*

Estimated erected cost million $ U.S.	14.2
Utility consumption:	
Electric power, kW	780
High-pressure steam, MT/h	11
Cooling water, m^3/h	255
Fuel fired, million kcal/h	1.6

*Basis: 98.5 ton/h (7800 BPD) of feedstock. Feed composition: 60 wt % toluene, 40 wt % C_9 aromatics.
Note: MT/h = metric tons per hour.

CASE STUDY

A summary of the investment cost and utility consumption for a typical Tatoray unit is shown in Table 2.7.2. The basis for this case is a Tatoray unit processing 98.5 MT/h (7,800 BPD) of a feed consisting of 60 wt % toluene and 40 wt % A_9. This case corresponds to the case study for an integrated UOP aromatics complex presented in Chap. 2.1. The investment cost is limited to the Tatoray unit and stripper column and does not include further downstream product fractionation. The estimated erected cost for the Tatoray unit assumes construction on a U.S. Gulf Coast site in 2002. The scope of the estimate includes engineering, procurement, and erection of equipment on the site.

COMMERCIAL EXPERIENCE

UOP has a long tradition of strong commitment to the BTX industry. Since the 1950s, more than 650 aromatics processing units have been licensed for BTX production, including process technologies for over 15 million MTA of PX production. As a result of this dedication, UOP has pioneered in all major technology advancements. Employing an integrated approach, UOP has focused on improving the economics of aromatics processing. This includes the substantial improvement of yields in the Platformer unit and the efficient conversion and separation of the aromatic rings in the downstream process units that produce the pure BTX products.

Since October 2000, the total TA-5 catalyst installed capacity has reached 120,000 BPSD. Every TA-5 installation is operating well and meeting expectations with excep-

Downloaded from Digital Engineering Library @ McGraw-Hill (www.digitalengineeringlibrary.com)
Copyright © 2004 The McGraw-Hill Companies. All rights reserved.
Any use is subject to the Terms of Use as given at the website.

UOP TATORAY PROCESS

tionally high selectivities to xylenes and benzene. Design feed rates range from 2600 to 65,000 BPSD. The market acceptance has been outstanding, making TA-5 catalyst one of the most successful products of its kind.

CONCLUSIONS

The transalkylation process plays a key role in the production of xylenes. Improvements in the Tatoray catalysts have substantially increased the aromatics complex performance and profitability. The new TA-5 catalyst is now rapidly gaining acceptance in the BTX industry since its introduction in late 2000. TA-5 catalyst offers the convenience of a drop-in reload, twice the stability, and the same high conversion and selectivity to benzene and C8 aromatics as TA-4 catalyst.

REFERENCES

1. J. R. Mowry, "UOP Aromatics Transalkylation Tatoray Process," chapter 5.6, in R. A. Meyers, ed., *Handbook of Petroleum Refining Processes,* 1st ed., McGraw-Hill, New York, 1986.
2. N. Y. Chen, *Stud. Surf. Sci.Catal.,* vol. 38, p. 153, 1988.
3. A. Negiz, T. J. Stoodt, C. H. Tan, and J. Noe: "UOP's New Tatoray Catalyst (TA-5) for Maximum Yields and Product Quality," AIChE Spring Conference, Fuels and Petrochemicals Division, New Orleans, La., March 2002.
4. J. J. Jeanneret, C. D. Low, and V. Zukauskas, "New Strategies Maximize *para*-Xylene Production," *Hydrocarbon Processing,* vol. 6, p. 43, 1994.
5. J. H. D'Auria and T. J. Stoodt, *Harts Fuel Technology and Management,* vol. 35, 1997.

Downloaded from Digital Engineering Library @ McGraw-Hill (www.digitalengineeringlibrary.com)
Copyright © 2004 The McGraw-Hill Companies. All rights reserved.
Any use is subject to the Terms of Use as given at the website.

Downloaded from Digital Engineering Library @ McGraw-Hill (www.digitalengineeringlibrary.com)
Copyright © 2004 The McGraw-Hill Companies. All rights reserved.
Any use is subject to the Terms of Use as given at the website.

Source: HANDBOOK OF PETROLEUM REFINING PROCESSES

P · A · R · T · 3

CATALYTIC CRACKING

Downloaded from Digital Engineering Library @ McGraw-Hill (www.digitalengineeringlibrary.com)
Copyright © 2004 The McGraw-Hill Companies. All rights reserved.
Any use is subject to the Terms of Use as given at the website.

Downloaded from Digital Engineering Library @ McGraw-Hill (www.digitalengineeringlibrary.com)
Copyright © 2004 The McGraw-Hill Companies. All rights reserved.
Any use is subject to the Terms of Use as given at the website.

Source: HANDBOOK OF PETROLEUM REFINING PROCESSES

CHAPTER 3.1
KBR FLUID CATALYTIC CRACKING PROCESS

Phillip K. Niccum and Chris R. Santner
KBR
Houston, Texas

INTRODUCTION

Fluid catalytic cracking (FCC) technology is a technology with more than 60 years of commercial operating experience. The process is used to convert higher-molecular-weight hydrocarbons to lighter, more valuable products through contact with a powdered catalyst at appropriate conditions. Historically, the primary purpose of the FCC process has been to produce gasoline, distillate, and C_3/C_4 olefins from low-value excess refinery gas oils and heavier refinery streams. FCC is often the heart of a modern refinery because of its adaptability to changing feedstocks and product demands and because of high margins that exist between the FCC feedstocks and converted FCC products. As oil refining has evolved over the last 60 years, the FCC process has evolved with it, meeting the challenges of cracking heavier, more contaminated feedstocks, increasing operating flexibility, accommodating environmental legislation, and maximizing reliability.

The FCC unit continuously circulates a fluidized zeolite catalyst that allows rapid cracking reactions to occur in the vapor phase. The KBR Orthoflow FCC unit (Fig. 3.1.1) consists of a stacked disengager-regenerator system that minimizes plot space requirements. The cracking reactions are carried out in an up-flowing vertical reactor-riser in which a liquid oil stream contacts hot powdered catalyst. The oil vaporizes and cracks to lighter products as it moves up the riser and carries the catalyst along with it. The reactions are rapid, requiring only a few seconds of contact time. Simultaneously with the desired reactions, coke, a material having a low ratio of hydrogen to carbon, deposits on the catalyst and renders it less catalytically active. Catalyst and product vapors separate in a disengaging vessel with the catalyst continuing first through a stripping stage and second through a regeneration stage where coke is combusted to rejuvenate the catalyst and provide heat for operation of the process. The regenerated catalyst then passes to the bottom of the reactor-riser, where the cycle starts again. Hydrocarbon product vapors flow downstream for separation into individual products.

KBR, through its ancestry in The M.W. Kellogg Company, has been a leader in FCC technology developments since the inception of the process. In recent years, KBR has worked with its FCC partner, ExxonMobil, to create and refine FCC technology features that have led the industry. To date, KBR has licensed more than 120 grassroots FCC

Downloaded from Digital Engineering Library @ McGraw-Hill (www.digitalengineeringlibrary.com)
Copyright © 2004 The McGraw-Hill Companies. All rights reserved.
Any use is subject to the Terms of Use as given at the website.

KBR FLUID CATALYTIC CRACKING PROCESS

FIGURE 3.1.1 KBR Orthoflow FCC unit.

Downloaded from Digital Engineering Library @ McGraw-Hill (www.digitalengineeringlibrary.com)
Copyright © 2004 The McGraw-Hill Companies. All rights reserved.
Any use is subject to the Terms of Use as given at the website.

KBR FLUID CATALYTIC CRACKING PROCESS

units throughout the world, including 13 grassroots units and more than 120 revamps since just 1990.

FEEDSTOCKS

The modern FCC unit can accept a broad range of feedstocks, a fact which contributes to FCC's reputation as one of the most flexible refining processes in use today. Examples of common feedstocks for conventional distillate feed FCC units are

- Atmospheric gas oils
- Vacuum gas oils
- Coker gas oils
- Thermally cracked gas oils
- Solvent deasphalted oils
- Lube extracts
- Hydrocracker bottoms

Residual FCCU (RFCCU) processes Conradson carbon residue and metals-contaminated feedstocks such as atmospheric residues or mixtures of vacuum residue and gas oils. Depending on the level of carbon residue and metallic contaminants (nickel and vanadium), these feedstocks may be hydrotreated or deasphalted before being fed to an RFCCU. Feed hydrotreating or deasphalting reduces the carbon residue and metals levels of the feed, reducing both the coke-making tendency of the feed and catalyst deactivation.

PRODUCTS

Products from the FCC and RFCC processes are typically as follows:

- Fuel gas (ethane and lighter hydrocarbons)
- C_3 and C_4 liquefied petroleum gas (LPG)
- Gasoline
- Light cycle oil (LCO)
- Fractionator bottoms (slurry oil)
- Coke (combusted in regenerator)
- Hydrogen Sulfide (from amine regeneration)

Although gasoline is typically the most desired product from an FCCU or RFCCU, design and operating variables can be adjusted to maximize other products. The three principal modes of FCC operation are (1) maximum gasoline production, (2) maximum light cycle oil production, and (3) maximum light olefin production, often referred to as maximum LPG operation. These modes of operation are discussed below:

Maximum Gasoline

The maximum gasoline mode is characterized by use of an intermediate cracking temperature (510 to 540°C), high catalyst activity, and a high catalyst/oil ratio. Recycle is nor-

Downloaded from Digital Engineering Library @ McGraw-Hill (www.digitalengineeringlibrary.com)
Copyright © 2004 The McGraw-Hill Companies. All rights reserved.
Any use is subject to the Terms of Use as given at the website.

KBR FLUID CATALYTIC CRACKING PROCESS

mally not used since the conversion after a single pass through the riser is already high. Maximization of gasoline yield requires the use of an effective feed injection system, a short-contact-time vertical riser, and efficient riser effluent separation to maximize the cracking selectivity to gasoline in the riser and to prevent secondary reactions from degrading the gasoline after it exits the riser.

Maximum Middle Distillate

The maximum middle distillate mode of operation is a low-cracking-severity operation in which the first pass conversion is held to a low level to restrict recracking of light cycle oil formed during initial cracking. Severity is lowered by reducing the riser outlet temperature (below 510°C) and by reducing the catalyst/oil ratio. The lower catalyst/oil ratio is often achieved by the use of a fired feed heater which significantly increases feed temperature. Additionally catalyst activity is sometimes lowered by reducing the fresh catalyst makeup rate or reducing fresh catalyst activity. Since during low-severity operation a substantial portion of the feed remains unconverted in a single pass through the riser, recycle of heavy cycle oil to the riser is used to reduce the yield of lower-value, heavy streams such as slurry product.

When middle distillate production is maximized, upstream crude distillation units are operated to minimize middle distillate components in the FCCU feedstock, since these components either degrade in quality or convert to gasoline and lighter products in the FCCU. In addition, while maximizing middle distillate production, the FCCU gasoline endpoint would typically be minimized within middle distillate flash point constraints, shifting gasoline product into LCO.

If it is desirable to increase gasoline octane or increase LPG yield while also maximizing LCO production, ZSM-5 containing catalyst additives can be used. ZSM-5 selectively cracks gasoline boiling-range linear molecules and has the effect of increasing gasoline research and motor octane ratings, decreasing gasoline yield, and increasing C_3 and C_4 LPG yield. Light cycle oil yield is also reduced slightly.

Maximum Light Olefin Yield

The yields of propylene and butylenes may be increased above that of the maximum gasoline operation by increasing the riser temperature above 540°C and by use of ZSM-5 containing catalyst additives. The FCC unit may also be designed specifically to allow maximization of propylene as well as ethylene production by incorporation of MAXOFIN FCC technology, as described more fully in the next section. While traditional FCC operations typically produce less than 6 wt % propylene, the MAXOFIN FCC process can produce as much as 20 wt % or more propylene from traditional FCC feedstocks. The process increases propylene yield relative to that produced by conventional FCC units by combining the effects of MAXOFIN-3 catalyst additive and proprietary hardware, including a second high-severity riser designed to crack surplus naphtha and C_4's into incremental light olefins. Table 3.1.1 shows the yield flexibility of the MAXOFIN FCC process that can alternate between maximum propylene and traditional FCC operations.

PROCESS DESCRIPTION

The FCC process may be divided into several major sections, including the converter section, flue gas section, main fractionator section, and vapor recovery units (VRUs). The

Downloaded from Digital Engineering Library @ McGraw-Hill (www.digitalengineeringlibrary.com)
Copyright © 2004 The McGraw-Hill Companies. All rights reserved.
Any use is subject to the Terms of Use as given at the website.

KBR FLUID CATALYTIC CRACKING PROCESS

TABLE 3.1.1 MAXOFIN FCC Process Yields and Operating Conditions

	Operating mode	
	Maximum propylene	Traditional fuels production
Description	Minas VGO and light naphtha recycle	Minas VGO
Feed		
Catalyst	FCC + ZSM-5	FCC
Reactor configuration	Dual riser	Single riser
Riser top temp., °F	1000 / 1100	1000
Yields, wt %		
Hydrogen sulfide	0.03	0.01
Hydrogen	0.91	0.12
Methane and ethane	6.61	2.08
Ethylene	4.30	0.91
Propane	5.23	3.22
Propylene	18.37	6.22
n-Butane	2.25	2.17
i-Butane	8.59	7.62
Butylenes	12.92	7.33
Gasoline	18.81	49.78
Light cycle oil	8.44	9.36
Decant oil	5.19	5.26
Coke	8.34	5.91

number of product streams, the degree of product fractionation, flue gas handling steps, and several other aspects of the process will vary from unit to unit, depending on the requirements of the application. The following sections provide more detailed descriptions of the converter, flue gas train, main fractionator, and VRU.

Converter

The KBR Orthoflow FCCU converter shown in Fig. 3.1.2 consists of regenerator, stripper, and disengager vessels, with continuous closed-loop catalyst circulation between the regenerator and disengager/stripper. The term *Orthoflow* derives from the in-line stacked arrangement of the disengager and stripper over the regenerator. This arrangement has the following operational and cost advantages:

- Essentially all-vertical flow of catalyst in standpipes and risers
- Short regenerated and spent catalyst standpipes allowing robust catalyst circulation
- Uniform distribution of spent catalyst in the stripper and regenerator
- Low overall converter height
- Minimum structural steel and plot area requirements

Preheated fresh feedstock, plus any recycle feed, is charged to the base of the riser reactor. Upon contact with hot regenerated catalyst, the feedstock is vaporized and converted to lower-boiling fractions (light cycle oil, gasoline, C_3 and C_4 LPG, and dry gas). Product vapors are separated from spent catalyst in the disengager cyclones and flow via the disengager

Downloaded from Digital Engineering Library @ McGraw-Hill (www.digitalengineeringlibrary.com)
Copyright © 2004 The McGraw-Hill Companies. All rights reserved.
Any use is subject to the Terms of Use as given at the website.

KBR FLUID CATALYTIC CRACKING PROCESS

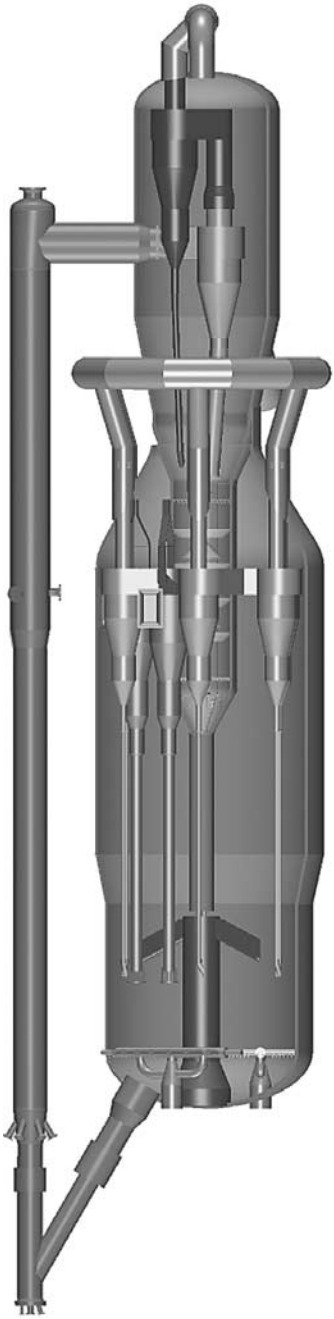

FIGURE 3.1.2 Orthoflow FCC converter.

Downloaded from Digital Engineering Library @ McGraw-Hill (www.digitalengineeringlibrary.com)
Copyright © 2004 The McGraw-Hill Companies. All rights reserved.
Any use is subject to the Terms of Use as given at the website.

KBR FLUID CATALYTIC CRACKING PROCESS

overhead line to the main fractionator and vapor recovery unit for quenching and fractionation. Coke formed during the cracking reactions is deposited on the catalyst, thereby reducing its activity. The coked catalyst, which is separated from the reactor products in the disengager cyclones, flows via the stripper and spent catalyst standpipe to the regenerator. The discharge rate from the standpipe is controlled by the spent catalyst plug valve.

In the regenerator, coke is removed from the spent catalyst by combustion with air. Air is supplied to the regenerator air distributors from an air blower. Flue gas from the combustion of coke exits the regenerator through two-stage cyclones which remove all but a trace of catalyst from the flue gas. Flue gas is collected in an external plenum chamber and flows to the flue gas train. Regenerated catalyst, with its activity restored, is returned to the riser via the regenerated catalyst plug valve, completing the cycle.

ATOMAX Feed Injection System

The Orthoflow FCC design employs a regenerated catalyst standpipe, a catalyst plug valve, and a short inclined lateral to transport regenerated catalyst from the regenerator to the riser.

The catalyst then enters a feed injection cone surrounded by multiple, flat-spray, atomizing feed injection nozzles, as shown in Fig. 3.1.3. The flat, fan-shaped sprays provide uniform coverage and maximum penetration of feedstock into catalyst, and prevent catalyst from bypassing feed in the injection zone. Proprietary feed injection nozzles, known as ATOMAX nozzles, are used to achieve the desired feed atomization and spray pattern while minimizing feed pressure requirements. The hot regenerated catalyst vaporizes the oil feed, raises it to reaction temperature, and supplies the necessary heat for cracking.

The cracking reaction proceeds as the catalyst and vapor mixture flow up the riser. The riser outlet temperature is controlled by the amount of catalyst admitted to the riser by the catalyst plug valve.

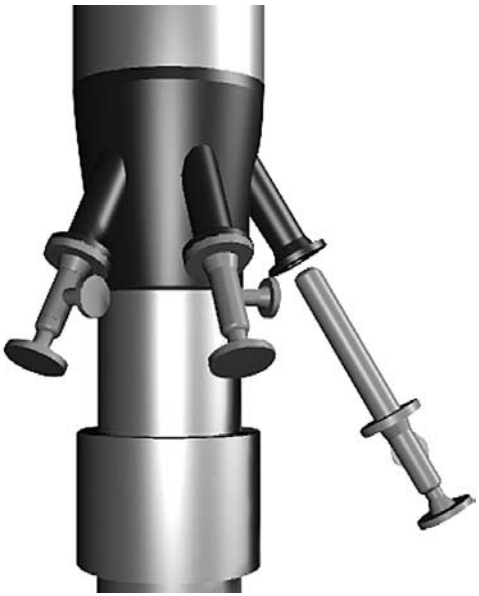

FIGURE 3.1.3 Feed injection cone.

Downloaded from Digital Engineering Library @ McGraw-Hill (www.digitalengineeringlibrary.com)
Copyright © 2004 The McGraw-Hill Companies. All rights reserved.
Any use is subject to the Terms of Use as given at the website.

KBR FLUID CATALYTIC CRACKING PROCESS

Riser Quench

The riser quench system consists of a series of nozzles uniformly spaced around the upper section of riser. A portion of the feed or a recycle stream from the main fractionator is injected through the nozzles into the riser to rapidly reduce the temperature of the riser contents. The heat required to vaporize the quench is supplied by increased fresh feed preheat or by increased catalyst circulation. This effectively increases the temperature in the lower section of the riser above that which would be achieved in a nonquenched operation, thereby increasing the vaporization of heavy feeds, increasing gasoline yield, olefin production, and gasoline octane.

Riser Termination

At the top of the riser, all the selective cracking reactions have been completed. It is important to minimize product vapor residence time in the disengager to prevent unwanted thermal or catalytic cracking reactions which produce dry gas and coke from more valuable products. Figure 3.1.4 shows the strong effect of temperature on thermal recracking of gasoline and distillate to produce predominantly dry gas.

Closed cyclone technology is used to separate product vapors from catalyst with minimum vapor residence time in the disengager. This system (Fig. 3.1.5) consists of riser cyclones directly coupled to secondary cyclones housed in the disengager vessel. The riser cyclones effect a quick separation of the spent catalyst and product vapors exiting the riser. The vapors flow directly from the outlet of the riser cyclones into the inlets of the

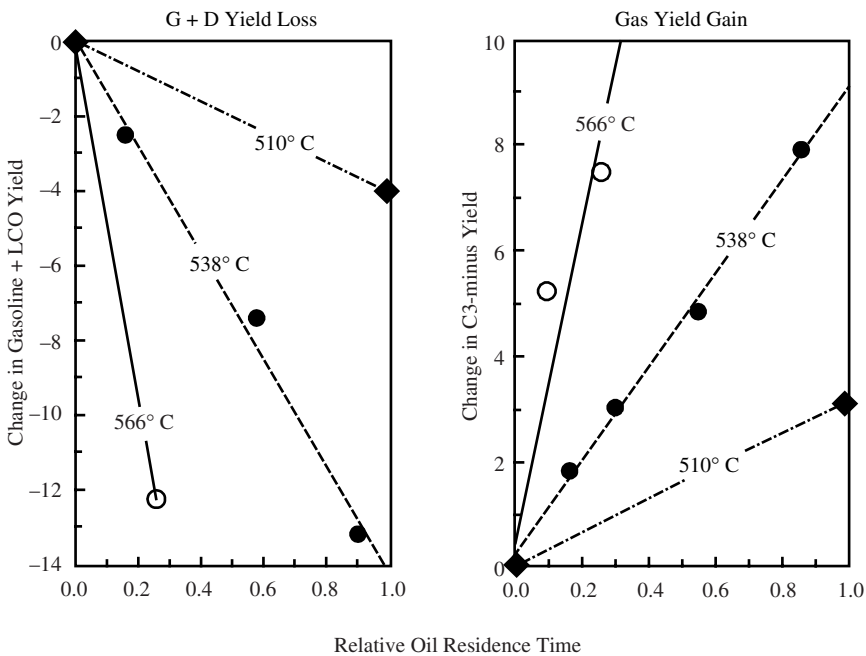

FIGURE 3.1.4 Pilot-plant data showing extent of thermal cracking of FCC reactor products.

Downloaded from Digital Engineering Library @ McGraw-Hill (www.digitalengineeringlibrary.com)
Copyright © 2004 The McGraw-Hill Companies. All rights reserved.
Any use is subject to the Terms of Use as given at the website.

KBR FLUID CATALYTIC CRACKING PROCESS

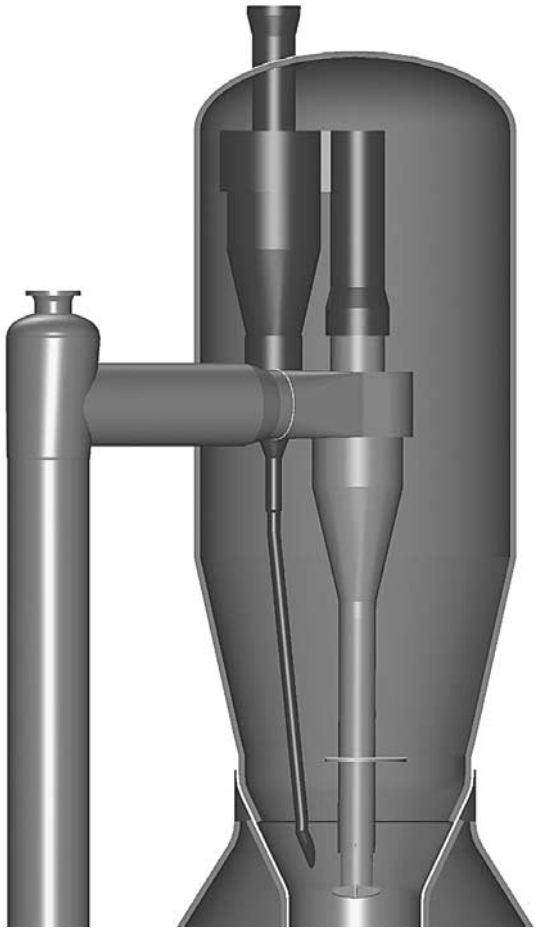

FIGURE 3.1.5 Closed cyclone system.

secondary cyclones and then to the main fractionator for rapid quenching. Closed cyclones almost completely eliminate postriser thermal cracking with its associated dry gas and butadiene production. Closed cyclone technology is particularly important in operation at high riser temperatures (say, 538°C or higher), typical of maximum gasoline or maximum light olefin operations.

MAXOFIN FCC

The proprietary MAXOFIN FCC process, licensed by KBR, is designed to maximize the production of propylene from traditional FCC feedstocks and selected naphthas (Fig. 3.1.6).

In addition to processing recycled light naphtha and C_4 LPG, the riser can accept naphtha from elsewhere in the refinery complex, such as coker naphtha streams, and upgrades these streams into additional light olefins. Olefinic streams, such as coker naphtha, convert

Downloaded from Digital Engineering Library @ McGraw-Hill (www.digitalengineeringlibrary.com)
Copyright © 2004 The McGraw-Hill Companies. All rights reserved.
Any use is subject to the Terms of Use as given at the website.

KBR FLUID CATALYTIC CRACKING PROCESS

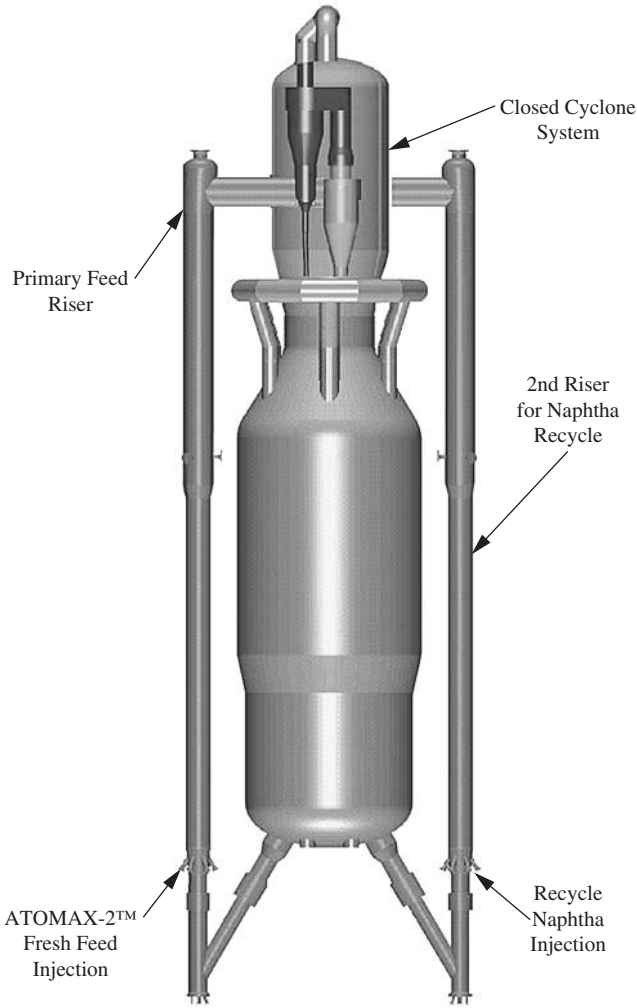

FIGURE 3.1.6 MAXOFIN FCC converter.

most readily to light olefins with the MAXOFIN FCC process. Paraffinic naphthas, such as light straight-run naphtha, also can be upgraded in the MAXOFIN FCC unit, but to a lesser extent than olefinic feedstocks.

A MAXOFIN FCC unit can also produce an economic volume of ethylene for petrochemical consumption if there is ready access to a petrochemical plant or ethylene pipeline. For instance, while traditional FCC operations have produced less than about 2 wt % ethylene, the MAXOFIN FCC process can produce as much as 8 wt % ethylene.

Spent Catalyst Stripping

Catalyst separated in the cyclones flows through the respective diplegs and discharges into the stripper bed. In the stripper, hydrocarbon vapors from within and around the catalyst

Downloaded from Digital Engineering Library @ McGraw-Hill (www.digitalengineeringlibrary.com)
Copyright © 2004 The McGraw-Hill Companies. All rights reserved.
Any use is subject to the Terms of Use as given at the website.

KBR FLUID CATALYTIC CRACKING PROCESS

particles are displaced by steam into the disengager dilute phase, minimizing hydrocarbon carry-under with the spent catalyst to the regenerator. Stripping is a very important function because it minimizes regenerator bed temperature and regenerator air requirements, resulting in increased conversion in regenerator temperature or air-limited operations. See Fig. 3.1.7.

The catalyst entering the stripper is contacted by upflowing steam introduced through two steam distributors. The majority of the hydrocarbon vapors entrained with the catalyst are displaced in the upper stripper bed. The catalyst then flows down through a set of hat and doughnut baffles. In the baffled section, a combination of residence time and steam partial pressure is used to allow the hydrocarbons to diffuse out of the catalyst pores into the steam introduced via the lower distributor.

Stripped catalyst, with essentially all strippable hydrocarbons removed, passes into a standpipe, which is aerated with steam to maintain smooth flow. At the base of the standpipe, a plug valve regulates the flow of catalyst to maintain the spent catalyst level in the stripper. The catalyst then flows into the spent catalyst distributor and into the regenerator.

Regeneration

In the regenerator, coke is burned off the catalyst with air in a fluid bed to supply the heat requirements of the process and restore the catalyst's activity. The regenerator is operated

FIGURE 3.1.7 Spent catalyst stripper.

Downloaded from Digital Engineering Library @ McGraw-Hill (www.digitalengineeringlibrary.com)
Copyright © 2004 The McGraw-Hill Companies. All rights reserved.
Any use is subject to the Terms of Use as given at the website.

KBR FLUID CATALYTIC CRACKING PROCESS

in either complete CO combustion or partial CO combustion modes. In the regenerator cyclones, the flue gas is separated from the catalyst.

Regeneration is a key part of the FCC process and must be executed in an environment that preserves catalyst activity and selectivity so that the reaction system can deliver the desired product yields.

The KBR Orthoflow converter uses a countercurrent regeneration system to accomplish this. The concept is illustrated in Fig. 3.1.8. The spent catalyst is introduced and distributed uniformly near the top of the dense bed. This is made possible by the spent catalyst distributor. Air is introduced near the bottom of the bed.

The design allows coke burning to begin in a low-oxygen partial pressure environment which controls the initial burning rate. Controlling the burning rate prevents excessive particle temperatures which would damage the catalyst. The hydrogen in the coke combusts more quickly than the carbon, and most of the water formed is released near the top of the bed. These features together minimize catalyst deactivation during the regeneration process.

With this unique approach, the KBR countercurrent regenerator achieves the advantages of multiple regeneration stages, yet does so with the simplicity, cost efficiency, and reliability of a single regenerator vessel.

Catalyst Cooler

A regenerator heat removal system may be included to keep the regenerator temperature and catalyst circulation rate at the optimum values for economic processing of the feedstock. The requirement for a catalyst cooler usually occurs when processing residual feedstocks which produce more coke, especially at high conversion.

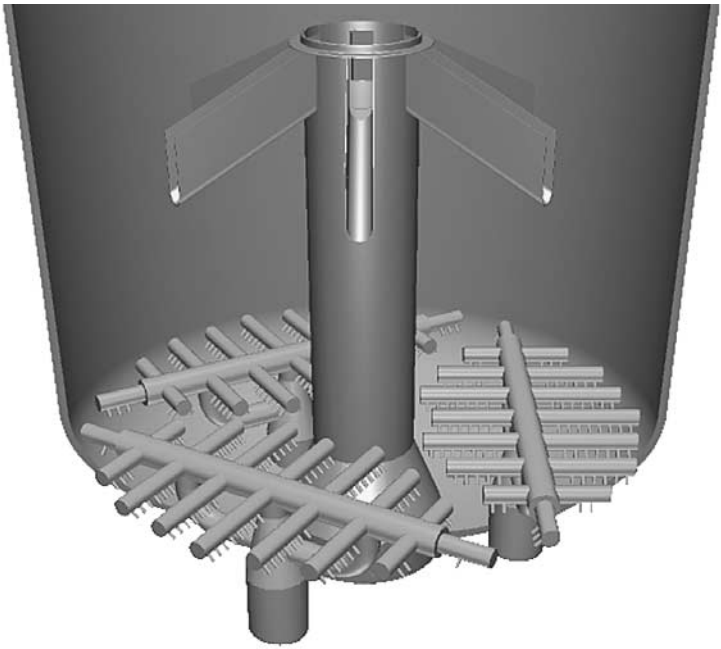

FIGURE 3.1.8 Regenerator air and spent catalyst distributors.

Downloaded from Digital Engineering Library @ McGraw-Hill (www.digitalengineeringlibrary.com)
Copyright © 2004 The McGraw-Hill Companies. All rights reserved.
Any use is subject to the Terms of Use as given at the website.

KBR FLUID CATALYTIC CRACKING PROCESS

The KBR regenerator heat removal system is shown in Figure 3.1.9. It consists of an external catalyst cooler which generates high-pressure steam from heat transferred from the regenerated catalyst.

Catalyst is drawn off the side of the regenerator and flows downward as a dense bed through an exchanger containing bayonet tubes. The catalyst surrounding the bayonet tubes is cooled and then transported back to the regenerator. Air is introduced at the bottom of the cooler to fluidize the catalyst. A slide valve is used to control the catalyst circulation rate and thus the heat removed. Varying the catalyst circulation gives control over regenerator temperature for a broad range of feedstocks, catalysts, and operating conditions.

Gravity circulated boiler feedwater flows downward through the inner bayonet tubes while the steam generated flows upward through the annulus between the tubes.

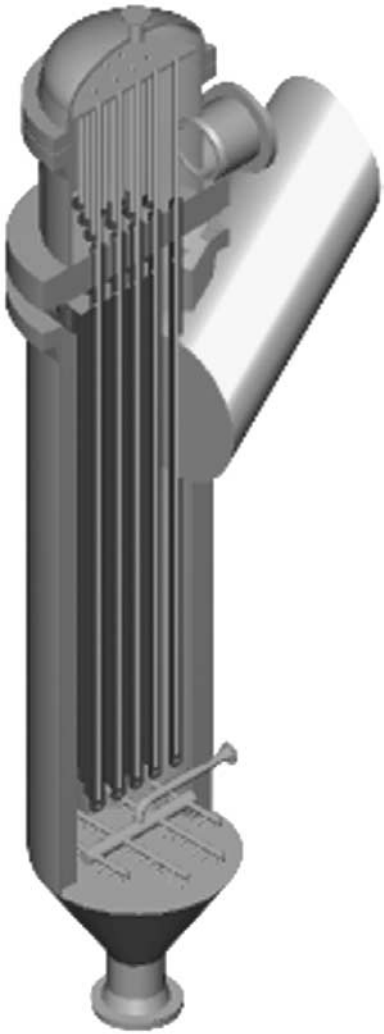

FIGURE 3.1.9 Dense phase catalyst cooler.

Downloaded from Digital Engineering Library @ McGraw-Hill (www.digitalengineeringlibrary.com)
Copyright © 2004 The McGraw-Hill Companies. All rights reserved.
Any use is subject to the Terms of Use as given at the website.

KBR FLUID CATALYTIC CRACKING PROCESS

Flue Gas Section

Flue gas exits the regenerator through two-stage cyclones and an external plenum chamber into the flue gas train, as shown in Fig. 3.1.10. Energy from the regenerator flue gas is recovered in two forms: Energy is recovered in the form of mechanical energy by means of a flue gas expander and in the form of heat by the generation of steam in the flue gas cooler or CO boiler.

Power Recovery

A flue gas expander is included to recover energy from reducing flue gas pressure. A third stage catalyst separator is installed upstream of the expander to protect the expander blades from undue erosion by catalyst, as shown in Fig. 3.1.11. Overflow from the third-stage separator flows to the expander turbine, where energy is extracted in the form of work.

The expander and a butterfly valve located near the expander inlet act in series to maintain the required regenerator pressure. A small quantity of gas with most of the catalyst is taken as underflow from the third-stage catalyst separator and recombined with the flue gas downstream of the expander.

The expander may be coupled with the main air blower, providing power for blower operation; or the air blower may be driven by a separate electric motor or steam turbine with expander output used solely for electric power generation. If the expander is coupled with the air blower, a motor/generator is required in the train to balance expander output with the air blower power requirement, and a steam turbine is included to assist with start-up. The steam turbine may be designed for continuous operation as an economic outlet for excess steam, or a less expensive turbine exhausting to atmosphere may be installed for use only during start-up.

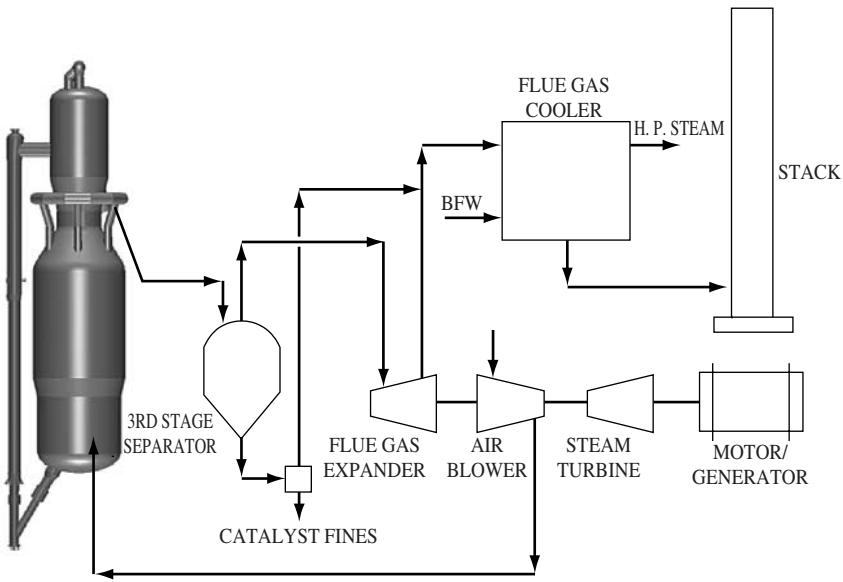

FIGURE 3.1.10 Regenerator flue gas system.

Downloaded from Digital Engineering Library @ McGraw-Hill (www.digitalengineeringlibrary.com)
Copyright © 2004 The McGraw-Hill Companies. All rights reserved.
Any use is subject to the Terms of Use as given at the website.

KBR FLUID CATALYTIC CRACKING PROCESS

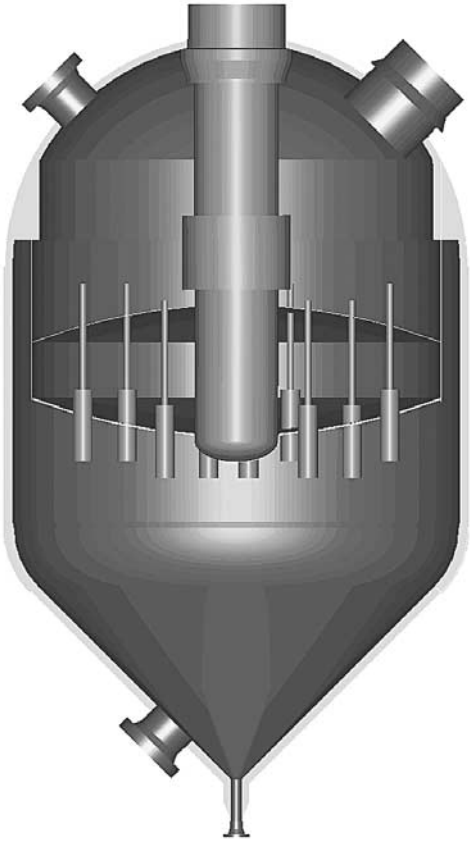

FIGURE 3.1.11 CycloFines third-stage separator.

Flue Gas Heat Recovery

The flue gas from the expander flows to a flue gas cooler, generating superheated steam from the sensible heat of the flue gas stream. If the unit were designed to operate in a partial CO combustion mode, a CO (incinerator) boiler would be installed rather than a flue gas cooler. The gases then pass to the stack. In some cases, an SO_x scrubbing unit or an electrostatic precipitator is also installed, depending upon the governing environmental requirements for SO_x and particulate emissions.

Main Fractionator Section

The process objectives of the main fractionator system are to

- Condense superheated reaction products from the FCC converter to produce liquid hydrocarbon products
- Provide some degree of fractionation between liquid sidestream products

Downloaded from Digital Engineering Library @ McGraw-Hill (www.digitalengineeringlibrary.com)
Copyright © 2004 The McGraw-Hill Companies. All rights reserved.
Any use is subject to the Terms of Use as given at the website.

KBR FLUID CATALYTIC CRACKING PROCESS

- Recover heat that is available from condensing superheated FCC converter products

A process flow diagram of the main fractionator section is shown in Fig. 3.1.12.

Superheated FCC converter products are condensed in the main fractionator to produce wet gas and raw gasoline from the overhead reflux drum, light cycle oil from the bottom of the LCO stripper, and fractionator bottoms from the bottom of the main fractionator. Heavy naphtha from the upper section of the main fractionator is utilized as an absorber oil in the secondary absorber in the vapor recovery unit (VRU). Any fractionator bottoms recycle and heavy cycle oil recycle are also condensed and sent to the RFCC converter.

Heat recovered from condensation of the converter products is used to preheat fresh converter feed, to reboil the stripper and debutanizer towers in the vapor recovery unit, and to generate high-pressure steam. Heat that cannot be recovered and utilized at a useful level is rejected to air and finally to cooling water.

Fractionator Overhead

Fractionator overhead vapor flows to the fractionator overhead air cooler and then to the overhead trim cooler. Fractionator overhead products, consisting of wet gas, raw gasoline, a small amount of reflux, and sour water, are condensed in the overhead reflux system.

Net products and reflux are recovered in the fractionator overhead reflux drum. Wet gas flows to the wet gas compressor low-pressure suction drum in the vapor recovery section. Raw gasoline is pumped to the top of the primary absorber and serves as primary lean oil.

Heavy Naphtha Pumparound

Fractionation trays are provided between the LCO and heavy naphtha draw in the main fractionator. Desired fractionation between the LCO and raw gasoline is achieved by induced reflux over these trays. Circulating reflux and lean oil are pumped to the pumparound system.

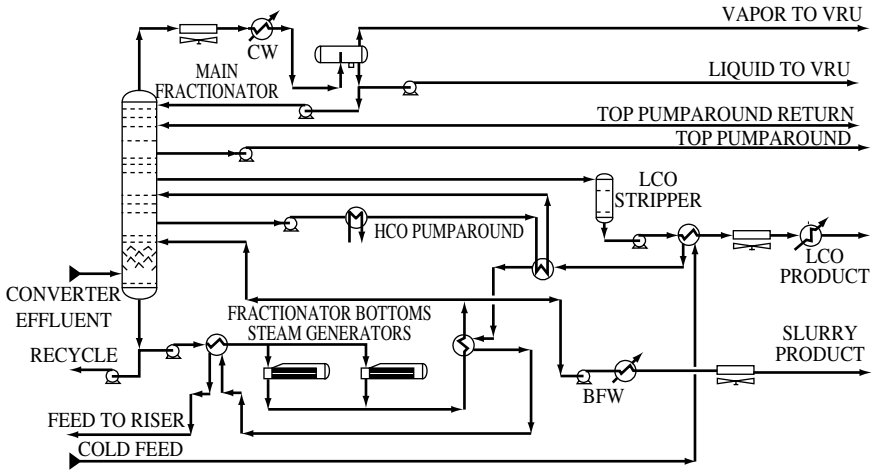

FIGURE 3.1.12 Main fractionator section.

Downloaded from Digital Engineering Library @ McGraw-Hill (www.digitalengineeringlibrary.com)
Copyright © 2004 The McGraw-Hill Companies. All rights reserved.
Any use is subject to the Terms of Use as given at the website.

KBR FLUID CATALYTIC CRACKING PROCESS

Significant quantities of C_4 and C_5 boiling-range material are recovered in the return rich oil from the secondary absorber. This recovered material is vaporized and leaves the fractionator in the overhead product stream. Lighter components recovered in the secondary absorber are recycled between the fractionator and vapor recovery section.

Light Cycle Oil

Light cycle oil is withdrawn from the main fractionator and flows by gravity to the top tray of the LCO stripper. Steam is used to strip the light ends from the LCO to improve the flash point. Stripped LCO product is pumped through the fresh feed/LCO exchanger, the LCO air cooler, and the LCO trim cooler and then is delivered to the battery limits.

Heavy Cycle Oil Pumparound

Net wet gas, raw gasoline, and LCO products are cooled, and HCO reflux is condensed in this section. Total condensed material is collected in a total trap-out tray, which provides suction to the pumparound pump.

Net tray liquid is pumped back to the cleanup trays below. The circulating reflux is cooled by first exchanging heat with the debutanizer in the vapor recovery section and then preheating fresh FCC feed.

Main Fractionator Bottoms Pumparound

FCC converter products—consisting of hydrocarbon gases, steam, inert gases, and a small amount of entrained catalyst fines—flow to the main fractionator tower above the fractionator bottoms steam distributor. The converter products are cooled and washed free of catalyst fines by circulation of a cooled fractionator bottoms material over a baffled tower section above the feed inlet nozzle.

Heat removed by the bottoms pumparound is used to generate steam in parallel kettle-type boilers and to preheat fresh FCC feed, as required. Fractionator bottoms product is withdrawn at a point downstream of the feed preheat exchangers. The bottoms product is cooled through a boiler feedwater preheater and an air cooler, and then it is delivered to the battery limits.

Fresh Feed Preheat

The purpose of this system is to achieve required FCC converter feed preheat temperature, often without use of a fired heater. The fresh feed may be combined from several sources in a feed surge drum. The combined feed is then pumped through various exchangers in the main fractionator section to achieve the desired feed temperature.

Vapor Recovery Unit

The vapor recovery unit consists of the wet gas compressor section, primary absorber, stripper, secondary absorber, and debutanizer. The vapor recovery section receives wet gas and raw gasoline from the main fractionator overhead drum.

The vapor recovery unit is required to accomplish the following:

Downloaded from Digital Engineering Library @ McGraw-Hill (www.digitalengineeringlibrary.com)
Copyright © 2004 The McGraw-Hill Companies. All rights reserved.
Any use is subject to the Terms of Use as given at the website.

KBR FLUID CATALYTIC CRACKING PROCESS

- Reject C_2 and lighter components to the fuel gas system
- Recover C_3 and C_4 products as liquids with the required purity
- Produce debutanized gasoline product with the required vapor pressure

A process flow diagram of a typical vapor recovery section is shown in Fig. 3.1.13.

Additional product fractionation towers may be included depending on the desired number of products and required fractionation efficiency. These optional towers often include a depropanizer to separate C_3 and C_4 LPG, a C_3 splitter to separate propane from propylene, and a gasoline splitter to produce light and heavy gasoline products.

Wet Gas Compression

Wet gas from the fractionator overhead reflux drum flows to a two-stage centrifugal compressor. Hydrocarbon liquid from the low-pressure stage and high-pressure gas from the high-pressure stage are cooled in the air-cooled condenser and combined with liquid from the primary absorber and vapor from the stripper overhead. This combined two-phase stream is further cooled in the high-pressure trim cooler before flowing into the high-pressure separator drum.

Stripper

Liquid from the high-pressure separator is pumped to the top tray of the stripper. The stripper is required to strip C_2's and lighter components from the debutanizer feed and thus serves to control the C_2 content of the C_3/C_4 LPG product. Stripped C_2's and lighter products are rejected to the primary absorber. Absorbed C_3's and heavier products are recovered in the stripper bottoms.

Primary Absorber

Vapor from the high-pressure separator drum flows to a point below the bottom tray in the absorber. Raw gasoline from the main fractionator and supplemental lean oil from the bottom of the debutanizer combine and flow to the top tray of the absorber. This combined liquid feed serves to absorb C_3's and heavier components from the high-pressure vapor.

Secondary Absorber

Vapor from the primary absorber overhead contains recoverable liquid products. Gasoline boiling-range components and a smaller quantity of C_4 and C_3 boiling-range material are recovered in the secondary absorber by contacting the primary absorber overhead with heavy naphtha lean oil from the main fractionator.

Rich oil containing recovered material returns to the main fractionator. Sour fuel gas from the top of the secondary absorber flows to the amine treating section and finally to the fuel gas system.

Debutanizer

Liquid from the bottom of the stripper exchanges heat with the debutanizer bottoms and then flows to the debutanizer. The debutanizer is required to produce a gasoline product of

Downloaded from Digital Engineering Library @ McGraw-Hill (www.digitalengineeringlibrary.com)
Copyright © 2004 The McGraw-Hill Companies. All rights reserved.
Any use is subject to the Terms of Use as given at the website.

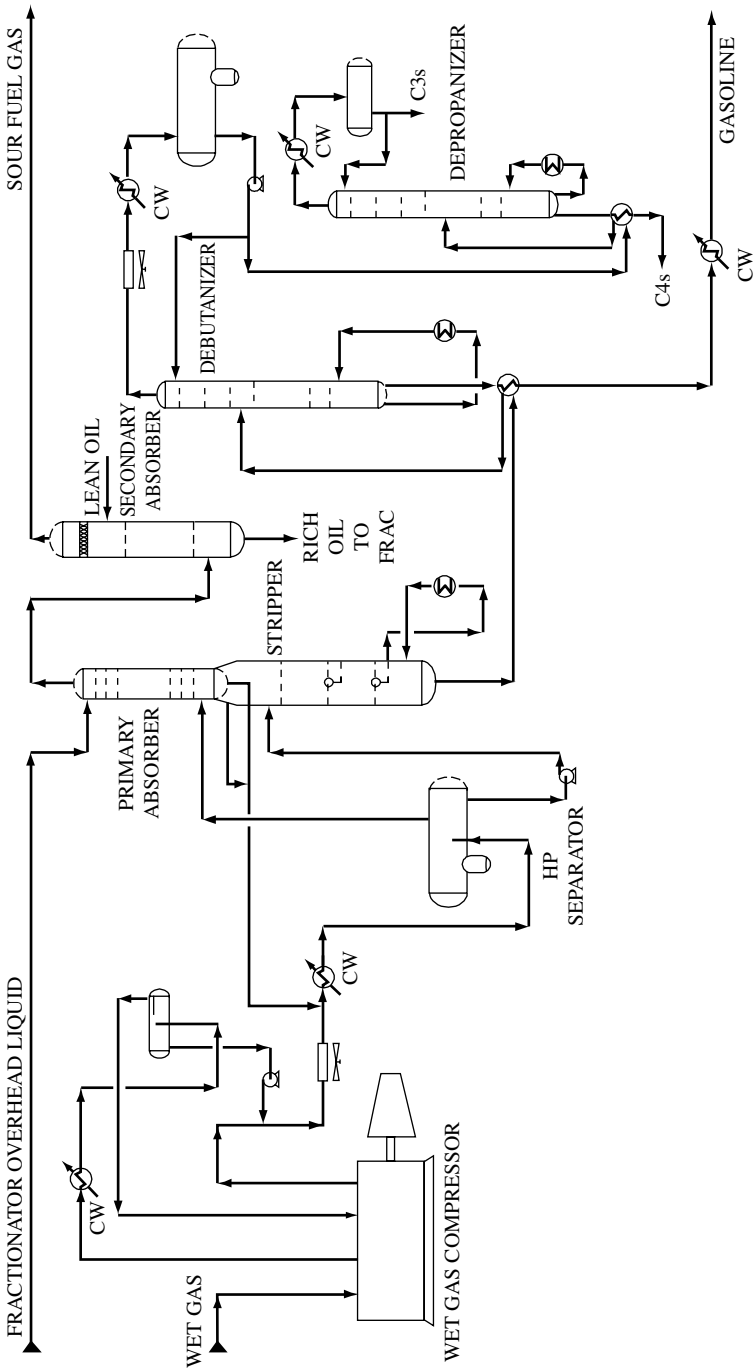

FIGURE 3.1.13 Vapor recovery unit.

Downloaded from Digital Engineering Library @ McGraw-Hill (www.digitalengineeringlibrary.com)
Copyright © 2004 The McGraw-Hill Companies. All rights reserved.
Any use is subject to the Terms of Use as given at the website.

KBR FLUID CATALYTIC CRACKING PROCESS

specified vapor pressure as well as produce a C_3/C_4 stream containing minimal amounts of C_5 boiling-range materials. The debutanizer reboiler is heated by HCO pumparound. The debutanizer and overhead condensing duty is supplied by an air-cooled condenser followed by a trim condenser utilizing cooling water.

The debutanizer overhead liquid product, C_3/C_4 LPG, is pumped to amine and caustic treating sections, then to product storage. The debutanizer bottoms stream, debutanized gasoline, exchanges heat with the debutanizer feed and cooling water, prior to caustic treating and delivery to product storage.

PROCESS VARIABLES

There are a large number of variables in the operation and design of an FCC unit which may be used to accommodate different feedstocks and operating objectives. Operational variables are those that may be manipulated while on-stream to optimize the FCCU performance. Decisions on design variables must be made before the unit is constructed.

Operational Variables

FCCU operating variables can be grouped into categories of dependent and independent variables. Many operating variables, such as regenerator temperature and catalyst circulation rate, are considered dependent variables because operators do not have direct control of them. Independent variables are the ones over which the operators have direct control, such as riser outlet temperature or recycle rate.

Two dependent operating variables useful in a discussion of other variables are conversion and catalyst/oil ratio. Conversion is a measure of the degree to which the feedstock is cracked to lighter products and coke during processing in the FCCU. It is defined as 100 percent minus the volume percent yield of LCO and heavier liquid products. In general, as conversion of feedstock increases, the yields of LPG, dry gas, and coke increase, while the yields of LCO and fractionator bottoms decrease; gasoline yield increases, decreases, or remains constant depending on the situation.

Catalyst/oil ratio (cat/oil) is the ratio of catalyst circulation rate to charge rate on a weight basis. At a constant charge rate, cat/oil increases as catalyst circulation increases. At constant riser temperature, conversion increases as cat/oil increases due to the increased contact of feed and catalyst.

Following is a discussion of six important independent operating variables:

- Riser temperature
- Recycle rates
- Feed preheat temperature
- Fresh feed rate
- Catalyst makeup rate
- Gasoline endpoint

Riser Temperature. Increasing the riser temperature set point will signal the regenerated catalyst valve to increase the hot catalyst flow as necessary to achieve the desired riser outlet temperature. The regenerator temperature will also rise because of the increased temperature of the catalyst returned to the regenerator and because of increased coke laydown on the catalyst. When steady state is reached, both the catalyst circulation and the regenerator temperature will be higher than they were at the lower

Downloaded from Digital Engineering Library @ McGraw-Hill (www.digitalengineeringlibrary.com)
Copyright © 2004 The McGraw-Hill Companies. All rights reserved.
Any use is subject to the Terms of Use as given at the website.

KBR FLUID CATALYTIC CRACKING PROCESS

riser temperature. The increased riser temperature and increased catalyst circulation (cat/oil) result in increased conversion.

Compared to the other means of increasing conversion, increased riser temperature produces the largest increase in dry gas and C_3 yields but less increase in coke yield. This makes increasing riser temperature an attractive way to increase conversion when the unit is close to a regenerator air limit, but has some spare gas-handling capacity.

Increasing riser temperature also significantly improves octane. The octane effect of increased reactor temperature is about 1 $(R + M) / 2$ per 15°C; however, beyond a certain temperature, gasoline yield will be negatively impacted. The octane effect will often swing the economics to favor high-riser-temperature operation.

Recycle Rates. HCO and slurry from the main fractionator can be recycled to the riser to increase conversion and/or increase regenerator temperature when spare coke-burning capacity is available. Coke and gas yield will be higher from cracking HCO or slurry than from cracking incremental fresh feed, so regenerator temperature and gas yield will increase significantly when recycling HCO or slurry to the riser. As such, recycle of slurry to the riser is an effective way to increase regenerator temperature if this is required. If the FCCU is limited on gas-handling capacity, the use of HCO or slurry recycle will require a reduction in riser temperature which will depress octane, and conversion could also fall.

Operation with HCO or slurry recycle together with lower riser temperature is sometimes used when the objective is to maximize LCO yield. This maximizes LCO yield because the low riser temperature minimizes cracking of LCO boiling-range material into gasoline and lighter products while the recycle of the heavy gas oil provides some conversion of these streams to LCO.

Sometimes slurry recycle is employed to take entrained catalyst back into the converter. This is most often done when catalyst losses from the reactor are excessive.

Feed Preheat Temperature. Decreasing the temperature of the feed to the riser increases the catalyst circulation rate required to achieve the specified riser outlet temperature. The increase in catalyst circulation rate (cat/oil) causes increased conversion of the FCC feedstock. Compared to raising the riser outlet temperature, increasing conversion via lower preheat temperature produces a larger increase in coke yield but smaller increases in C_3 and dry gas yield and octane. Feed preheat temperature has a large effect on coke yield because reducing the heat supplied by the charge to the riser requires an increase in heat from the circulating catalyst to satisfy the riser heat demand.

When the FCCU is near a dry gas or C_3 production limit, but has spare coke-burning capacity, reducing preheat temperature is often the best way to increase conversion. Conversely, if the FCCU is air-limited, but has excess light ends capacity, high preheat (and higher riser temperature) is often the preferred mode of operation.

In most cases, reducing preheat will lead to a lower regenerator temperature because the initial increase in coke yield from the higher catalyst circulation (cat/oil) is not enough to supply the increased reactor heat demand. In other cases, reducing the feed preheat temperature may result in an increased regenerator temperature. This can occur if the feed preheat temperature is reduced to the point that it hinders feed vaporization in the riser or if catalyst stripping efficiency falls because of higher catalyst circulation rate.

Fresh Feed Rate. As feed rate to the riser is increased, the other independent operating variables must usually be adjusted to produce a lower conversion so that the unit will stay within controlling unit limitations, such as air blower capacity, catalyst circulation capability, gas compressor capacity, and downstream C_3 and C_4 olefin processing capacity. The yield and product quality effects associated with the drop in

Downloaded from Digital Engineering Library @ McGraw-Hill (www.digitalengineeringlibrary.com)
Copyright © 2004 The McGraw-Hill Companies. All rights reserved.
Any use is subject to the Terms of Use as given at the website.

KBR FLUID CATALYTIC CRACKING PROCESS

conversion are chiefly a function of changes in these other independent variables. Economically, feed rate is a very important operating variable because of the profit associated with each barrel processed.

Catalyst Makeup Rate. Each day, several tons of fresh catalyst are added to the FCCU catalyst inventory. Periodically, equilibrium catalyst is withdrawn from the FCCU to maintain the inventory in the desired range. Increasing the fresh catalyst makeup rate will increase the equilibrium catalyst activity because in time it lowers the average age and contaminant (Ni, V, and Na) concentrations of the catalyst in the inventory.

With other independent FCCU operating variables held constant, increasing catalyst activity will cause greater conversion of feedstock and an increase in the amount of coke deposited on the catalyst during each pass through the riser. To keep the coke burning in balance with the process heat requirements, as the activity increases, the regenerator temperature will increase and the catalyst circulation (cat/oil) will fall, to keep the coke burning consistent with the process heat demand. The conversion will usually increase with increasing activity because the effect of higher catalyst activity outweighs the effect of the lower catalyst circulation rate.

If riser or feed preheat temperatures are adjusted to keep conversion constant as activity is increased, the coke and dry gas yields will decrease. This makes increasing catalyst activity attractive in cases where the air blower or gas compressor is limiting, but where some increase in regenerator temperature can be tolerated. (Typically, regenerator temperature will be limited to around 720°C in consideration of catalyst activity maintenance.) If the riser temperature has to be lowered to stay within a regenerator temperature limitation, the conversion increase will be lost.

Gasoline Endpoint. The gasoline/LCO cut point can be changed to significantly shift product yield between gasoline and LCO while maintaining both products within acceptable specifications. Changing the cut point can significantly alter the gasoline octane and sulfur content. A lower cut point results in lower sulfur content and generally higher octane, but of course the gasoline yield is reduced.

Design Variables

Several FCCU process design variables are available to tailor the unit design to the requirements of a specific application. Several of these are discussed below:

- Feed dispersion steam rate
- Regenerator combustion mode
- Regenerator heat removal
- Disengager and regenerator pressures
- Feed temperature

Feed Dispersion Steam Rate. Selection of a design feed dispersion steam rate influences the sizing of the feed injection nozzles, so dispersion steam rate is both a design and an operating variable. Design dispersion steam rates are commonly in a range between 2 and 5 wt % of feed, depending on the feed quality. The lower values are most appropriate for vacuum gas oil feedstocks while dispersion steam rates near the upper end of the range are most appropriate for higher-boiling, more difficult to vaporize residual feedstocks. Once the feed nozzle design has been specified, a

Downloaded from Digital Engineering Library @ McGraw-Hill (www.digitalengineeringlibrary.com)
Copyright © 2004 The McGraw-Hill Companies. All rights reserved.
Any use is subject to the Terms of Use as given at the website.

KBR FLUID CATALYTIC CRACKING PROCESS

dispersion steam operating range is recommended for optimizing the unit during operation.

Regenerator Combustion Mode. Oxygen-lean regeneration (partial CO combustion) is most appropriate for use with heavy residuals where regenerator heat release and air consumption are high due to high coke yield. In addition, oxygen-lean regeneration offers improved catalyst activity maintenance at high catalyst vanadium levels, due to reduced vanadium mobility at lower oxygen levels. In grassroots applications, therefore, oxygen-lean regeneration is preferred for heavy residual operations with high catalyst vanadium loadings.

On the other hand, for better-quality residuals and gas oil feedstocks, complete CO combustion is preferred for its simplicity of operation. Other factors in the selection of regeneration mode are listed below:

- A unit designed to operate in an oxygen-lean mode of regeneration must include a CO boiler to reduce CO emissions to environmentally safe levels. If a CO boiler is included, the KBR Orthoflow FCC unit may also be operated in a full CO combustion mode, with the CO boiler serving to recover sensible heat from the flue gas.
- Unit investment cost is lower for oxygen-lean regeneration due to reduced regenerator, air blower, and flue gas system size.
- Steam production can be maximized by operating in an oxygen-lean mode of regeneration, due to combustion in the CO boiler.
- Regenerator heat removal systems (such as catalyst coolers) may be avoided in some cases if the unit is operated in an oxygen-lean mode of regeneration.
- In some cases, complete CO combustion will allow the unit to operate with a lower coke yield, thereby increasing the yield of liquid products.
- SO_x emissions can be controlled to lower levels with complete CO combustion, due to a lower coke-burning rate and because SO_x-reducing catalyst additives are more effective at the higher regenerator oxygen content.

Regenerator Heat Removal. Depending on the feedstock, desired conversion, and regenerator combustion mode, a regenerator heat removal system may be required to control regenerator temperature in a range chosen to provide an optimum catalyst/oil ratio and minimum catalyst deactivation. KBR uses an external dense phase catalyst cooler for control of heat balance, which provides maximum reliability and maximum operating flexibility.

The range of the heat removal requirements may be seen in Fig. 3.1.14, which shows the amount of heat removal required to absorb the heat associated with increased feed Conradson carbon residue content. Direct heat removal from the regenerator is just one of several means available for control of the unit heat balance. Flue gas CO_2/CO ratio is also a design variable which may influence the unit heat balance, as shown in Fig. 3.1.15.

Disengager and Regenerator Pressures. In the KBR Orthoflow converter design, the regenerator pressure is held 7 to 10 lb/in^2 higher than the disengager pressure to provide the desired differential pressures across the spent and regenerated catalyst control valves. The process designer may still, however, specify the overall operating pressure of the system. Lower operating pressures tend to favor product yield selectivity, spent catalyst stripper performance, and air blower horsepower requirements; but these advantages come with increased vessel sizes and thus higher investment cost.

In addition, the economics of flue gas expanders are improved with increased regenerator operating pressure. Economic analysis comparing high-pressure and low-pressure

Downloaded from Digital Engineering Library @ McGraw-Hill (www.digitalengineeringlibrary.com)
Copyright © 2004 The McGraw-Hill Companies. All rights reserved.
Any use is subject to the Terms of Use as given at the website.

KBR FLUID CATALYTIC CRACKING PROCESS

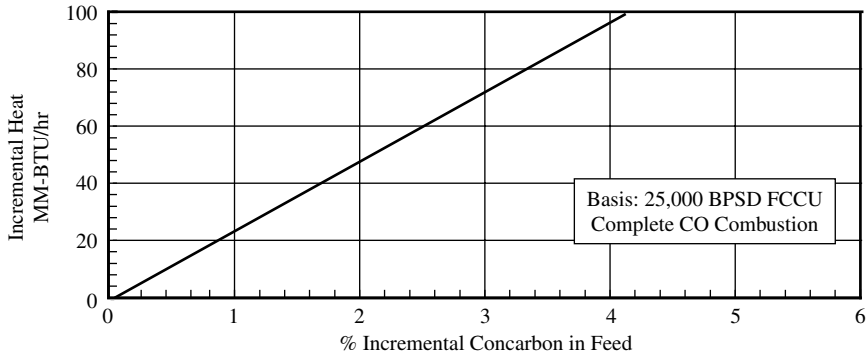

FIGURE 3.1.14 Impact of feed carbon residue on heat released during catalyst regeneration.

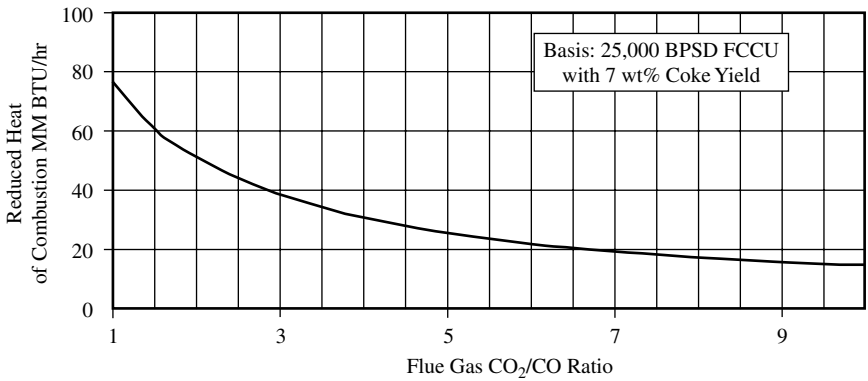

FIGURE 3.1.15 Impact of flue gas composition on heat released during catalyst regeneration.

designs and yield performance have concluded that investment in a lower-pressure unit is the most attractive, even if a flue gas expander is included in the analysis.

Feed Temperature. The design feed temperature affects the feed preheat exchanger train configuration and the possible requirement of a fired feed heater. In general, modern FCCU designs do not include fired feed heaters, except for those units designed to emphasize the production of middle distillates.

ADVANCED PROCESS CONTROL

FCC units have a large number of interactive variables, making advanced process control (APC) especially beneficial. The benefits of an FCCU APC system include the following:

- Operation closer to targets and constraints

Downloaded from Digital Engineering Library @ McGraw-Hill (www.digitalengineeringlibrary.com)
Copyright © 2004 The McGraw-Hill Companies. All rights reserved.
Any use is subject to the Terms of Use as given at the website.

KBR FLUID CATALYTIC CRACKING PROCESS

- Improved stability and smoother operation
- Enhanced operator information
- Faster response to changes in refinery objectives

These benefits translate to economic gains typically ranging from $0.05 to $0.20 per barrel of feed, not including the less tangible benefits associated with the APC installation.

The KBR APC system for the Orthoflow FCCU consists of five modules, as shown in Fig. 3.1.16. Although each module is independently implemented, the required interactions are accounted for in the control algorithms. Following is a general description of the functions performed by each module.

Severity Control Module

This module manipulates the riser outlet temperature, feed flow rates, and feed temperature to operate the unit within its constraints while satisfying a specified operating objective. Typical constraints considered by the system include catalyst valve differential, regenerator temperature, coke-burning rate, wet gas make, and fractionator overhead liquid flow rate. The operating objective is selected by the operator through a menu.

Based on client requirements and specific refinery objectives, the menu may include options such as those listed:

- Maximize reactor temperature while maintaining a feed rate target.
- Maximize feed rate while maintaining a reactor temperature target.
- Minimize feed temperature while maintaining a reactor temperature target.

Combustion Control Module

This module maintains the oxygen composition in the regenerator flue gas at a specified control target by manipulating the airflow rate. This module compensates for changes in the feed rate, recycle flow rate, riser outlet temperature, and feed temperature in a feed-forward manner, which assists the system in maintaining the flue gas oxygen concentration close to the target at all times.

Pressure Balancing and Control Module

This module controls the overall converter pressure by manipulating the wet gas compressor suction pressure. The suction pressure is controlled to maximize the utilization of available air blower and wet gas compressor capacity. It also distributes the available pressure differential across the catalyst valves by manipulating the reactor/regenerator pressure differential, which maximizes converter catalyst circulation capacity.

Fractionator Control Module

This module increases recovery of more valuable products by more closely meeting the quality specifications. It also maximizes high-level heat recovery while observing loading and heat removal constraints of the unit.

These objectives are accomplished by manipulation of the bottoms pumparound return temperature, the HCO pumparound return temperature, the overhead reflux rate, and the LCO product flow rate.

Downloaded from Digital Engineering Library @ McGraw-Hill (www.digitalengineeringlibrary.com)
Copyright © 2004 The McGraw-Hill Companies. All rights reserved.
Any use is subject to the Terms of Use as given at the website.

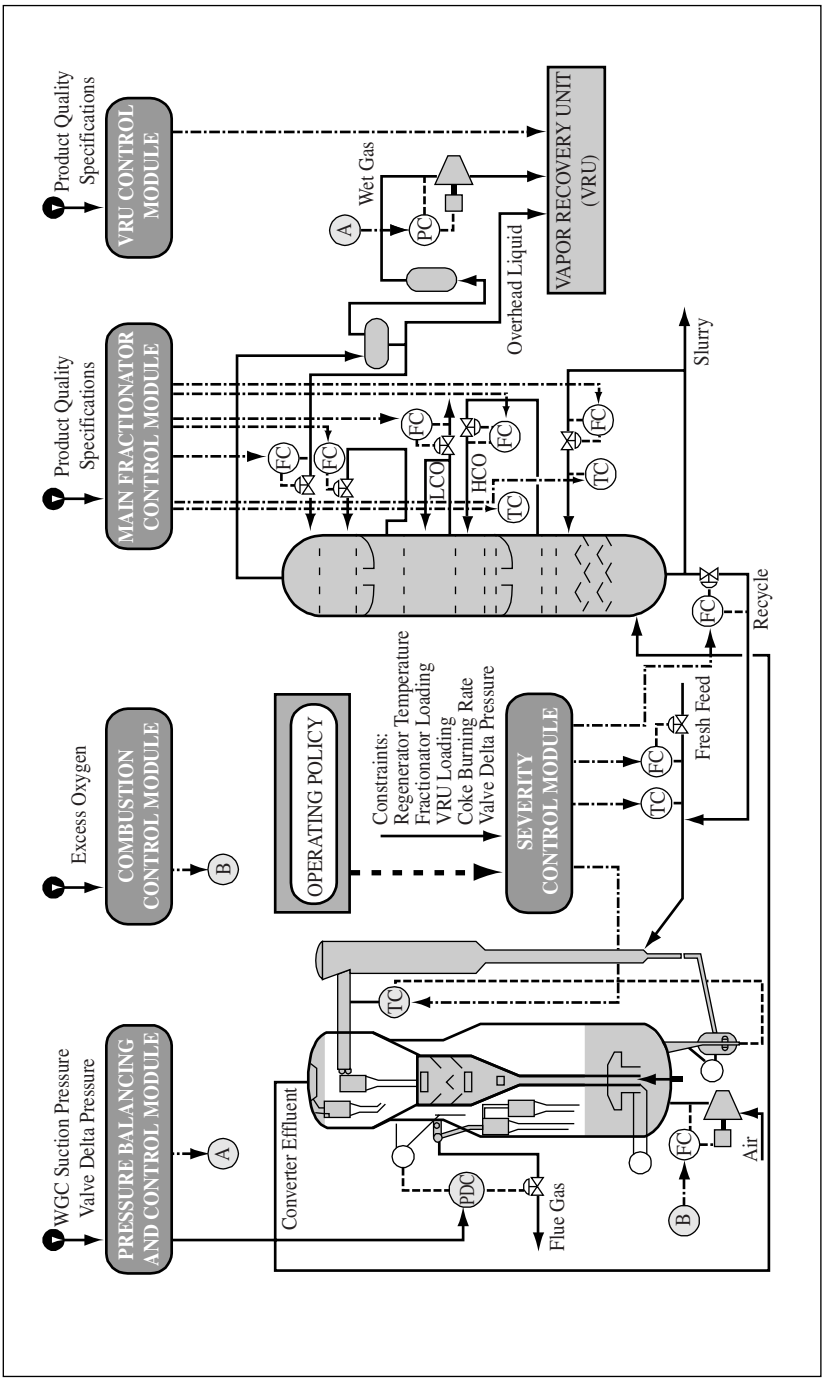

FIGURE 3.1.16 Advanced process control system for FCC unit.

Downloaded from Digital Engineering Library @ McGraw-Hill (www.digitalengineeringlibrary.com)
Copyright © 2004 The McGraw-Hill Companies. All rights reserved.
Any use is subject to the Terms of Use as given at the website.

KBR FLUID CATALYTIC CRACKING PROCESS

In addition to optimizing the steady-state operation of the main fractionator, the system is configured to react to several different disturbance variables, such as reactor feed rate and riser temperature, in a feed-forward manner. This minimizes the transient effects of the disturbances on the fractionator operation.

Vapor Recovery Unit Control Module

This module adjusts the operation of the VRU towers to more closely meet product specifications. It also stabilizes unit operation through the use of surge capacity.

CATALYST AND CHEMICAL CONSUMPTION

Initial Charge of FCC Catalyst

The initial charge of catalyst to a unit should consist of an equilibrium catalyst with good activity and low metals content. The circulating inventory depends on the coke-burning capacity of the unit. Catalyst inventory in the KBR Orthoflow design (Fig. 3.1.1) is minimized by the use of a dual diameter regenerator vessel. This provides a moderately high regenerator bed velocity which minimizes bed inventory, while the expanded regenerator top section minimizes catalyst losses by reducing catalyst entrainment to the cyclones.

Fresh FCC Catalyst

FCC operators must add fresh catalyst continually to replace losses through the cyclones and to maintain the activity of the unit's circulating inventory at an acceptable level. Catalysts containing rare earth exchanged ultrastable Y zeolite are preferred. The ultrastabilization processes provide the zeolite with excellent stability and low coke selectivity, while the rare earth exchange increases activity and further increases stability.

The optimum level of rare earth will depend on the desired trade-off between gasoline yield, coke selectivity, light olefin yields, and gasoline octane.

Depending on the level of bottoms upgrading desired, active matrix materials may be included in the catalyst to increase the ratio of LCO to slurry oil.

The FCC catalyst market advances rapidly, and improved products are continually becoming available. KBR continually evaluates the characteristics and performance of commercial fresh and equilibrium catalysts. Several catalyst families from the major vendors have shown the attributes required for effective FCCU operation. Within these families, there are variations in activity, rare earth content, and matrix activity, which may be used to optimize the catalyst formulation for a particular application. Although general guidelines help to narrow the choices, the best way to choose the optimum catalyst is through pilot-plant testing with a representative feedstock.

When feedstock metals are low, hydrothermal deactivation of catalyst with age is the major factor in catalyst deactivation, setting the fresh catalyst addition rate required to achieve the desired equilibrium catalyst activity with a given fresh catalyst. Proper regenerator design can be used to minimize catalyst makeup requirements, with countercurrent regeneration and low regenerator temperatures minimizing the deactivation rate. The feedstocks for many units contain high levels of both nickel and vanadium. In these units, control of equilibrium catalyst metals with fresh catalyst additions is the primary defense

Downloaded from Digital Engineering Library @ McGraw-Hill (www.digitalengineeringlibrary.com)
Copyright © 2004 The McGraw-Hill Companies. All rights reserved.
Any use is subject to the Terms of Use as given at the website.

KBR FLUID CATALYTIC CRACKING PROCESS

against metals contamination and deactivation. Refer to Fig. 3.1.17 for typical FCC fresh catalyst addition requirements.

At higher feed metals loadings, additional means of controlling the effects of metals become economic. The deleterious effects of nickel contamination can be passivated by the addition of antimony or bismuth. Vanadium effects can be mitigated by employing selective metal traps, either incorporated in the catalyst or as separate particles, which selectively bind vanadium and prevent it from reaching and destroying the zeolite. In addition, older higher metals, catalyst particles can be selectively removed from the unit inventory by magnetic separation, providing increased activity and lower equilibrium catalyst metals concentrations for a given fresh catalyst makeup rate, as described below.

MagnaCat

As a result of continual catalyst losses and fresh catalyst additions, the inventory of catalyst particles in a commercial FCC unit represents a broad age and activity distribution. This includes just-added particles being relatively fresh and active and catalytically "dead" particles which have been in the unit for many months or even years. The particles which have been in the unit the longest are the most deactivated and least selective for cracking to desired liquid products. Catalyst deactivation and loss of selectivity are the result of extended exposure to the hydrothermal deactivating environment of the regenerator which reduces zeolite surface area and crystallinity. Since many FCC units now include atmospheric or vacuum residue in the feedstock to increase the upgrade of heavy oils to transportation fuels, the catalyst inventory is also contaminated with metals. These include nickel, vanadium, and iron among others.

Since the oldest catalyst particles have had the most contact with the metals-contaminated feed, it follows that the oldest particles will have the greatest concentration of accumulated metals, particularly nickel and iron. The distribution of the accumulated nickel and iron on catalyst will be similar to the age distribution of the inventory. Figure 3.1.18

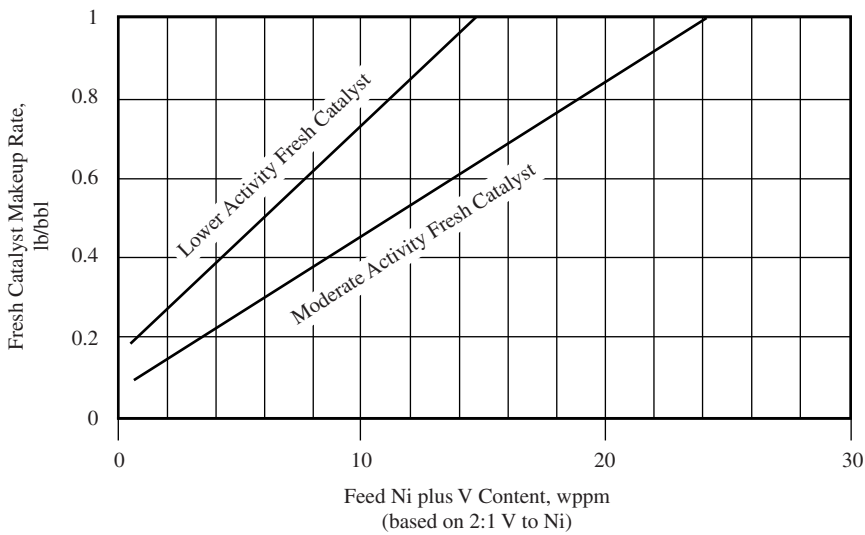

FIGURE 3.1.17 Typical fresh catalyst makeup requirements for constant-equilibrium catalyst activity.

Downloaded from Digital Engineering Library @ McGraw-Hill (www.digitalengineeringlibrary.com)
Copyright © 2004 The McGraw-Hill Companies. All rights reserved.
Any use is subject to the Terms of Use as given at the website.

KBR FLUID CATALYTIC CRACKING PROCESS

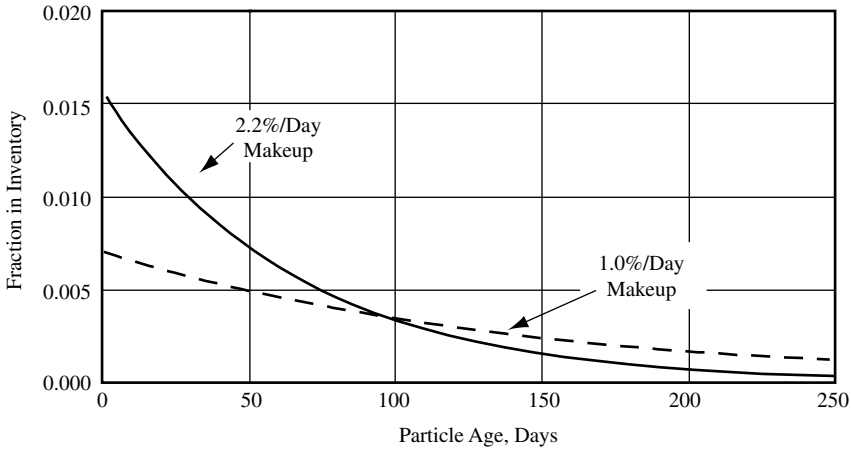

FIGURE 3.1.18 FCC catalyst age distribution.

shows the particle age distribution in a perfectly back-mixed catalyst inventory for two daily makeup rates.

The greater magnetic susceptibility imparted by the higher concentration of deposited metals on the older catalyst allows MagnaCat to make a separation between them and the newer, less magnetic catalyst particles. Figure 3.1.19 is a simplified diagram of the roller magnet assembly which is the heart of the MagnaCat separation process. Figure 3.1.20 shows a complete, prefabricated MagnaCat module, including catalyst transporters, magnetic separator, catalyst hopper, and baghouse.

Equilibrium catalyst is distributed onto a moving belt which has a high-field-strength permanent magnet in the form of a roller at its far end. As the equilibrium catalyst passes into the magnetic field, the most magnetic catalyst is retained on the belt. The nonmagnetic catalyst, on the other hand, is discharged from the end of the belt into a chute and returned to the FCC.

After the most magnetic catalyst leaves the roller's magnetic field, it is discharged into a second chute and discarded.

In effect, then, MagnaCat results in selective withdrawal of the poorest fraction of the catalyst inventory rather than indiscriminate withdrawal of fresh and deactivated catalyst together. It's obvious from this that the FCC catalyst inventory, on average, is fresher and more active and selective with MagnaCat than without it.

Spent Catalyst Disposal

Equilibrium catalyst withdrawn from the regenerator is typically disposed of in a landfill or used in concrete or brick manufacturing.

Passivator

Antimony or bismuth solutions may be required for nickel passivation, especially if the equilibrium catalyst nickel content exceeds 2000 ppm. Passivation reduces the coke and gas make associated with the metals, which translates into increased liquid recovery and reduced compressor requirements. Typically, metals passivation can reduce the coke make by 10 percent and the hydrogen yield by 50 to 70 percent.

Downloaded from Digital Engineering Library @ McGraw-Hill (www.digitalengineeringlibrary.com)
Copyright © 2004 The McGraw-Hill Companies. All rights reserved.
Any use is subject to the Terms of Use as given at the website.

KBR FLUID CATALYTIC CRACKING PROCESS

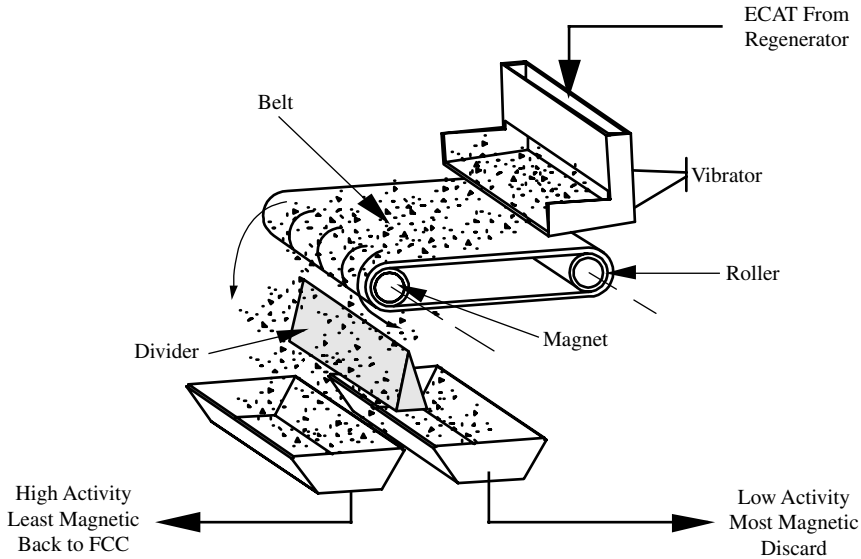

FIGURE 3.1.19 Magnetic separator.

Other Chemical Requirements

Diethanolamine (DEA) is required for the amine-treating system, a corrosion inhibitor solution is injected into the main fractionator overhead system, and phosphate injection is used in the slurry steam generators and waste heat boiler.

INVESTMENT AND UTILITIES COSTS

The following provides typical investment cost and utilities information for a 50,000 barrels per stream-day (BPSD) FCCU, including the costs of the converter, flue gas system (without power recovery), main fractionator and vapor recovery sections, and amine treating.

- Installed cost, U.S. Gulf Coast, first quarter of 2002: 2250 to 2500 $/BPSD
- High-pressure steam production: 40 to 200 lb/bbl
- Electric power consumption: 0.7 to 1.0 kWh/bbl

BIBLIOGRAPHY

Avidan, A. A., F. J. Krambeck, H. Owen, and P. H. Schipper, "FCC Closed Cyclone System Eliminates Post, Riser Cracking," *Oil and Gas Journal,* Mar. 16, 1990.

Dougan, T. J., U. Alkemade, B. Lakhanpal, and L. T. Brock: "Advances in FCC Vanadium Tolerance," NPRA Annual Meeting, San Antonio, Tex., Mar. 20, 1994.

Downloaded from Digital Engineering Library @ McGraw-Hill (www.digitalengineeringlibrary.com)
Copyright © 2004 The McGraw-Hill Companies. All rights reserved.
Any use is subject to the Terms of Use as given at the website.

KBR FLUID CATALYTIC CRACKING PROCESS

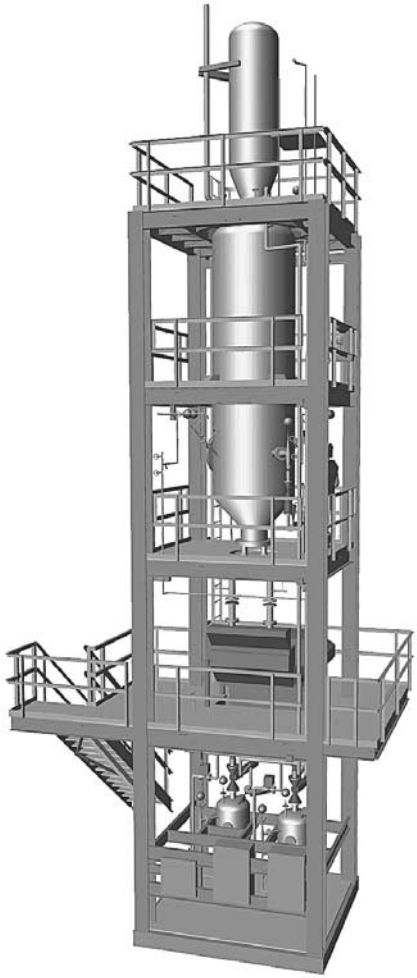

FIGURE 3.1.20 MagnaCat module.

Johnson, T. E.: "Improve Regenerator Heat Removal," *Hydrocarbon Processing,* November 1991.

Johnson, T. E., T. L. Goolsby, R. B. Miller, F. Fuji, M. Hara, D. C. Kowalczyk, and R. J. Campagna: "Successful Implementation of MagnaCat Technology at KPI's Chiba Refinery," 2000 Japanese Petroleum Institute (JPI) Paper, Tokyo, October 2000.

Kowalczyk, D., R. J. Campagna, W. P. Hettinger, and S. Takase, "Magnetic Separation Enhances FCC Unit Profitability," NPRA Annual Meeting, San Antonio, Tex., Mar. 17, 1991.

Miller, R. B., P. K. Niccum, P. L. Sestili, D. L. Johnson, A. R. Hansen, and S. Dou, "New Developments in FCC Feed Injection and Riser Hydrodynamics," AIChE Spring National Meeting, Atlanta, Ga., Apr. 18, 1994.

Miller, R. B., Yong-Lin Yang, E. Gbordzoe, D. L. Johnson, T. Mallow, and ExxonMobil Research and Engineering, "New Developments in FCC Feed Injection and Stripping Technologies," NPRA Annual Meeting, San Antonio, Tex., Mar. 26, 2000.

Downloaded from Digital Engineering Library @ McGraw-Hill (www.digitalengineeringlibrary.com)
Copyright © 2004 The McGraw-Hill Companies. All rights reserved.
Any use is subject to the Terms of Use as given at the website.

KBR FLUID CATALYTIC CRACKING PROCESS

Niccum, P. K., E. Gbordzoe, and S. Lang: "FCC Flue Gas Emission Control Options," NPRA Annual Meeting, San Antonio, Tex., Mar. 17, 2002.

Niccum, P. K., M. F. Gilbert, M. J. Tallman, and C. R. Santner, "Future Refinery—FCCs Role in Refinery/Petrochemical Integration," NPRA Annual Meeting, New Orleans, La., Mar. 18, 2001.

Raterman, M., G. K. Chitnis, T. Holtan, and B. K. Bussey: "A Post Audit of The New Mobil/M.W. Kellogg Cyclofines Third Stage Separator," NPRA Annual Meeting, San Francisco, Mar. 15, 1998.

Downloaded from Digital Engineering Library @ McGraw-Hill (www.digitalengineeringlibrary.com)
Copyright © 2004 The McGraw-Hill Companies. All rights reserved.
Any use is subject to the Terms of Use as given at the website.

Source: HANDBOOK OF PETROLEUM REFINING PROCESSES

CHAPTER 3.2
DEEP CATALYTIC CRACKING, THE NEW LIGHT OLEFIN GENERATOR

Warren S. Letzsch
DCC Program Manager
Stone & Webster Inc.
Houston, Texas

BASIS

The fluid catalytic cracking (FCC) unit is the most important and widely used heavy oil conversion process in the modern refinery. Historically, the FCC unit has operated in maximum gasoline and maximum distillate modes, depending on seasonal product demands and refinery locale. Recently, with the advent of reformulated gasoline requirements, the FCC unit has been increasingly required to operate in the maximum olefin mode. Light isoolefins, isobutylene and isoamylene, from the FCC unit are necessary feedstocks for methyl tertiary butyl ether (MTBE) and tertiary amyl methyl ether (TAME) oxygenated reformulated gasoline blending components. Increased alkylate demand to meet reformulated gasoline requirements also necessitates an increase in light olefins.

At the same time as these changes are occurring in the refining industry, the petrochemical industry is experiencing increased demands for propylene for the manufacture of polypropylene products. Nearly one-half of the propylene used by the chemical industry is obtained from refineries, and the remainder comes from steam cracking (SC).[1] As a result, the demand for propylene from both FCC units and SC units is rising. Since SC units produce ethylene as the primary product, a catalytic process is more suitable for making propylenes and butylenes.

The demand for propylene, both as an alkylation feed and for polypropylene production, is expected to continue growing well into the 21st century. More isoolefins are also needed for those locations where MTBE and TAME can be used in the gasoline pool. This places a considerable strain on the FCC unit and SC unit in order to meet the demand. Obviously, a need for an economical light olefin generating process is required to meet these demands for light olefins (C_3 through C_5).

To this end, Stone & Webster has entered into an agreement with the Research Institute of Petroleum Processing (RIPP) and Sinopec International, both located in the People's Republic of China, to exclusively license RIPP's Deep Catalytic Cracking (DCC) technology outside China. DCC is a fully commercialized process, similar to FCC, for producing

Downloaded from Digital Engineering Library @ McGraw-Hill (www.digitalengineeringlibrary.com)
Copyright © 2004 The McGraw-Hill Companies. All rights reserved.
Any use is subject to the Terms of Use as given at the website.

DEEP CATALYTIC CRACKING, THE NEW LIGHT OLEFIN GENERATOR

light olefins (C_3 to C_5) from heavy feedstocks such as gas oils and paraffinic residuals. Stone & Webster's proven position in FCC technology and steam cracking is a natural complement to DCC technology.

Numerous DCC units have been put in commercial service. Table 3.2.1 is a list of all DCC units operating at present. Figure 3.2.1 shows the unit built in Thailand currently operating at about 18,000 B/D and producing about 150,000 MTA of propylene.

PROCESS DESCRIPTION

DCC is a fluidized catalytic process for selectively cracking a variety of feedstocks to light olefins. A traditional reactor/regenerator unit design is employed with a catalyst having physical properties much like those of FCC catalyst. The DCC unit may be operated in one of two modes: maximum propylene (type I) and maximum isoolefins (type II). Each operational mode employs a unique catalyst and operating conditions. DCC reaction products are light olefins, high-octane gasoline, light cycle oil, dry gas, and coke. A small amount of slurry oil may also be produced.

DCC maximum propylene operation (type I) employs both riser and bed cracking at severe reactor conditions. Maximum isoolefin operation (type II) utilizes riser cracking, as does a modern FCC unit, at slightly milder conditions than a type I operation. Figure 3.2.2, a process flow diagram of a type I DCC process, serves as a basis for the process description. (Note that the only difference between the type I and type II designs is an extended riser with a riser termination device above the reactor bed level.)

Fresh feed is finely atomized by steam and injected into the riser through Stone & Webster proprietary FCC feed injection nozzles over a dense phase of catalyst. The atomized oil intimately mixes with the catalyst and begins to crack into lighter, more valuable products. A good feed injection system is required for DCC, just as for FCC operations, to ensure rapid oil vaporization and selective catalytic cracking reactions.

Riser steam is injected just above the feed injection point to supplement feed dispersion and stripping steam in order to achieve optimal hydrocarbon partial pressure for the DCC operation. Simple steam injection nozzles are employed for riser steam injection. (Steam requirements for DCC type II operation are considerably less and may not need additional steam injection nozzles.)

TABLE 3.2.1 DCC Commencement Status

Location	Feed, MTA*	Start-up	DCC type
Jinan, China	60,000	1990	I
Jinan expansion	150,000	1994	I and II
Anqing, China	400,000	1995	I
Daqing, China	120,000	1995	I
Jinmen, China	800,000	1997	II
TPI, Thailand†	900,000	1997	I
Shenyang, China	400,000	1998	II
Jinzhou, China	300,000	1999	I
Urumchi, China	800,000	1999	II

*MTA = metric tons per year.
†Design by Stone & Webster Engineering Corporation.

Downloaded from Digital Engineering Library @ McGraw-Hill (www.digitalengineeringlibrary.com)
Copyright © 2004 The McGraw-Hill Companies. All rights reserved.
Any use is subject to the Terms of Use as given at the website.

DEEP CATALYTIC CRACKING, THE NEW LIGHT OLEFIN GENERATOR

FIGURE 3.2.1 DCC unit at TPI refinery, Thailand.

Slurry recycle is injected, if required, just above the riser steam nozzles. This recycle stream is not required to increase overall conversion but rather to optimize the unit heat balance, as a large slurry reaction product is coke.

At the top of the riser, catalyst, steam, and hydrocarbon pass through a riser terminator located below the reactor bed. Conversion of the DCC feedstock can be regulated by adjusting the catalyst bed height (hydrocarbon weight hourly space velocity) above the riser distributor, the catalyst circulation rate, and/or the reactor temperature. Two-stage high-efficiency reactor cyclones remove entrained catalyst from the reactor vapors. Products, inerts, steam, and a small amount of catalyst flow from the reactor into the bottom of the main fractionator to begin product separation.

The regenerated catalyst slide valve controls the reactor bed temperature by regulating the amount of hot regenerated catalyst entering the riser. Nominal reactor temperatures and pressures are listed in Table 3.2.2.

Downloaded from Digital Engineering Library @ McGraw-Hill (www.digitalengineeringlibrary.com)
Copyright © 2004 The McGraw-Hill Companies. All rights reserved.
Any use is subject to the Terms of Use as given at the website.

DEEP CATALYTIC CRACKING, THE NEW LIGHT OLEFIN GENERATOR

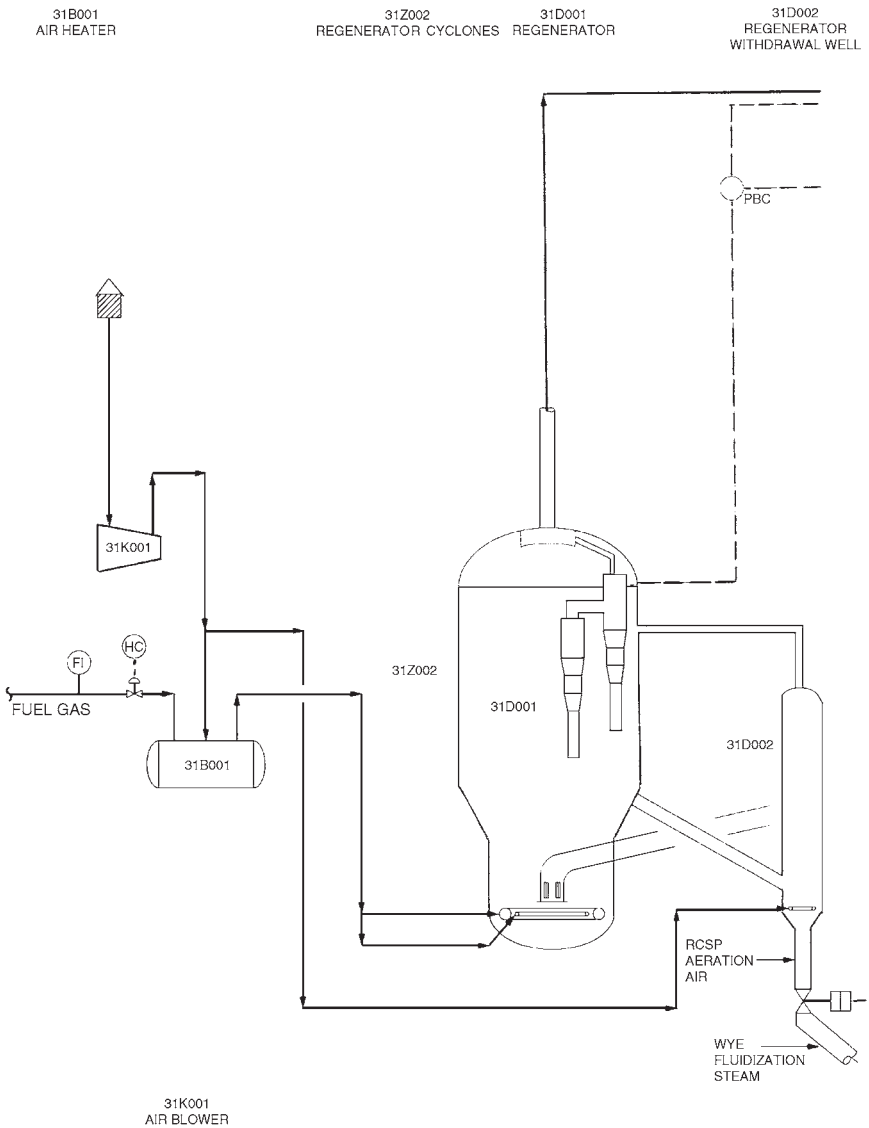

FIGURE 3.2.2 Maximum propylene DCC unit (type I) process flow diagram.

The stripper portion of the reactor vessel uses baffles to create multiple stages. Steam from the main steam ring fluidizes the catalyst bed, displaces the entrained hydrocarbons, and strips the adsorbed hydrocarbons from the catalyst before it enters the regeneration system. A steam fluffing ring, located in the bottom head of the stripper, keeps the catalyst properly fluidized and ensures smooth catalyst flow into the spent catalyst standpipe. An alternative to the baffled stripper is the use of packing to create the staging.

Spent catalyst leaves the stripper through a slanted standpipe. Aeration taps, located stepwise down the standpipe, serve to keep the catalyst aerated and replace the gas volume

Downloaded from Digital Engineering Library @ McGraw-Hill (www.digitalengineeringlibrary.com)
Copyright © 2004 The McGraw-Hill Companies. All rights reserved.
Any use is subject to the Terms of Use as given at the website.

DEEP CATALYTIC CRACKING, THE NEW LIGHT OLEFIN GENERATOR

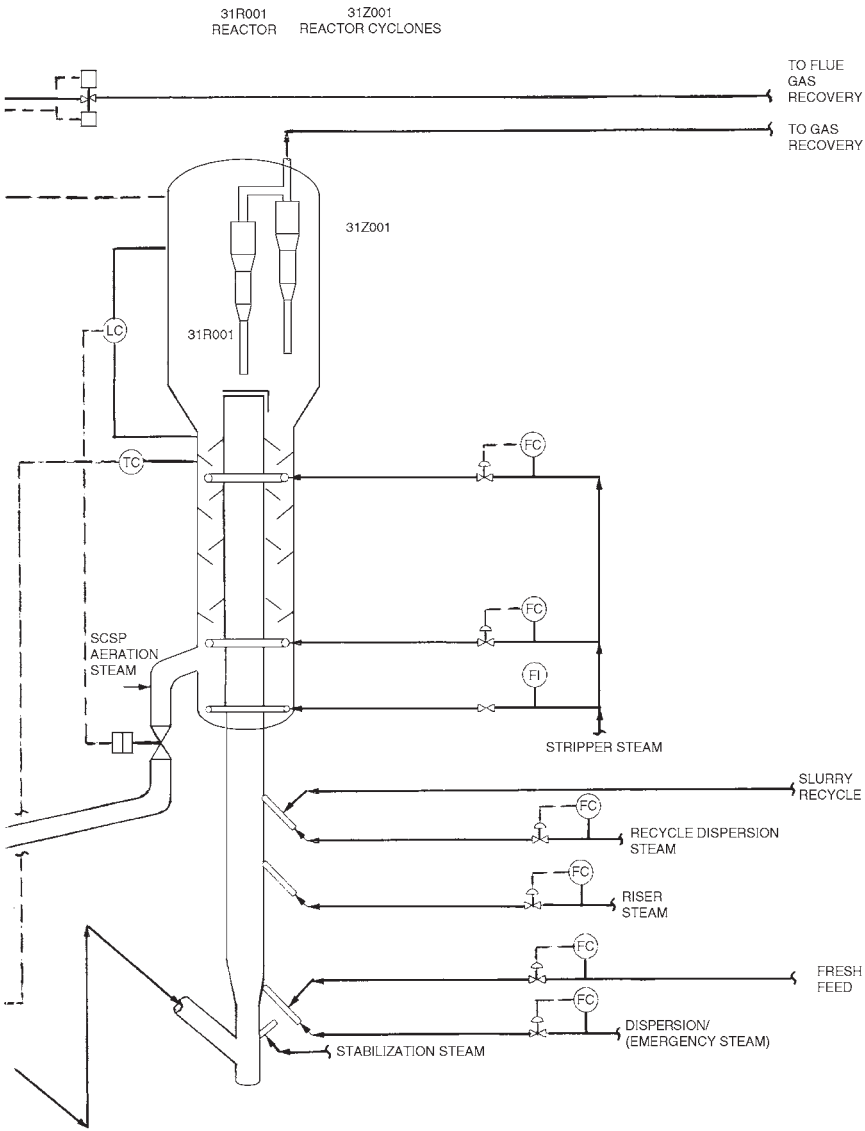

lost by compression. The spent catalyst slide valve, located near the point where the standpipe enters the regenerator, maintains proper bed level in the reactor/stripper. Reactor bed level is optimized with respect to conversion and unit operability.

Spent catalyst is dispersed inside the regenerator by a catalyst distributor just above the combustion air rings. Combustion air rings provide even air distribution across the regenerator bed, resulting in proper fluidization and combustion. The regenerator operates in a full combustion mode with approximately 2 vol % excess oxygen. Regenerator flue gases

Downloaded from Digital Engineering Library @ McGraw-Hill (www.digitalengineeringlibrary.com)
Copyright © 2004 The McGraw-Hill Companies. All rights reserved.
Any use is subject to the Terms of Use as given at the website.

DEEP CATALYTIC CRACKING, THE NEW LIGHT OLEFIN GENERATOR

exit through two-stage high-efficiency regenerator cyclones which remove entrained catalyst from the flue gas. Typical regenerator temperature is near 700°C. Regeneration/reactor differential pressure is controlled by a flue gas slide valve.

Hot regenerated catalyst is withdrawn from the regenerator, just below the regenerator bed level, into a catalyst withdrawal well. The withdrawal well allows the catalyst to deaerate properly to standpipe density before entering the vertical regenerated catalyst standpipe. A small air ring located in the withdrawal well serves to maintain proper catalyst fluidization. Aeration taps, located stepwise down the standpipe, replace gas volume lost by compression. Catalyst passes through the regenerated catalyst slide valve, which controls the reactor temperature by regulating the amount of hot catalyst entering the riser/reactor section. A straight vertical section below the feed nozzles stabilizes the catalyst flow and serves as a reverse seal, preventing oil reversals into the regenerator.

The DCC gas recovery section employs a low-pressure-drop main fractionator design with warm reflux overhead condensers to condense the large amounts of steam used in the converter. A large wet gas compressor is required, relative to FCC operation, because of the high amounts of dry gas and liquefied petroleum gas (LPG). The absorber and stripper columns, downstream of the wet gas compressor, are specifically designed for enhanced C_3 recovery at relatively low gasoline rates. Following the traditional debutanizer and depropanizer for contaminant removal, a deethanizer and C_3 splitter are required to produce polymer-grade propylene. For DCC units in or near a petrochemical process, a cryogenic ethylene recovery unit utilizing Stone & Webster's Advanced Recovery System (ARS) technology may be of interest for ethylene recovery and essentially complete propylene recovery. For a grassroots petrochemical plant, the gas recovery system can be optimized using Stone & Webster's maximum olefin recovery (MOR) technology, saving considerable investment capital.

The flue gas handling system, downstream of the DCC regenerator, requires considerations no different from those of an FCC system. It consists of a flue gas slide valve to control the differential pressure between the reactor and regenerator followed by an orifice chamber. Heat is recovered by a flue gas cooler in the form of high-pressure superheated steam. Depending on local particulate emission specifications, the system may contain a third-stage cyclone separator upstream of the flue gas slide valve or an electrostatic precipitator (ESP) upstream of the stack. SO_x or NO_x emission requirements may necessitate a flue gas scrubber or SO_x-capturing catalyst additive to reduce SO_x emissions and/or a selective catalytic reduction (SCR) process for NO_x removal.

CATALYST

The most critical part of the DCC process is the catalyst. RIPP's research and development efforts have resulted in the development of several proprietary catalysts, each with unique zeolites. All catalysts have physical properties similar to those of FCC catalysts.

The catalyst designated CRP-1 was developed for use in the DCC maximum propylene operation (type I). CRP has a relatively low activity to ensure high olefin selectivity and low hydrogen-transfer reactions. The catalyst also exhibits a high degree of hydrothermal stability and low coke selectivity.

CS-1 and CZ-1 were developed to produce high isobutylene and isoamylene selectivity as well as propylene selectivity. Again, these catalysts are low hydrogen-transfer catalysts with good hydrothermal and coke-selective properties.

All three types of catalyst are currently manufactured by Qilu Petrochemical Company's catalyst facility in China. Stone & Webster has qualified suppliers outside of China.

Downloaded from Digital Engineering Library @ McGraw-Hill (www.digitalengineeringlibrary.com)
Copyright © 2004 The McGraw-Hill Companies. All rights reserved.
Any use is subject to the Terms of Use as given at the website.

DEEP CATALYTIC CRACKING, THE NEW LIGHT OLEFIN GENERATOR

FEEDSTOCKS

The DCC process is applicable to various heavy feedstocks for propylene and isoolefin production. Feedstocks include wax, naphtha, thermally cracked gas oils, vacuum gas oils, hydrotreated feeds, and residual oils. Paraffinic feedstocks are preferred; however, successful pilot-plant trials have also been performed with naphthenic and aromatic feeds, although the olefin yields are significantly lower due to their lower hydrogen contents.

OPERATING CONDITIONS

A range of typical operating conditions for both type I (maximum propylene) and type II (maximum isoolefins) are shown in Table 3.2.2. Also indicated are typical FCC and SC operating conditions for comparison. A more severe reactor temperature is required for the DCC process than for FCC. Type II DCC reactor temperature is less severe than type 1, to increase isoolefin selectivity, but still more than FCC. Steam usage for DCC operations is higher than for FCC, but considerably less than for SC. DCC catalyst circulation rates are higher than FCC operations, while regenerator temperatures are similar or lower.

DCC PRODUCT YIELDS

DCC Maximum Propylene (Type I)

A typical DCC maximum propylene yield slate for a Daqing (paraffinic) VGO is shown in Table 3.2.3. For comparison purposes, FCC and SC maximum olefin yields for the same feedstock are also shown in Table 3.2.3.

Propylene is abundant in the DCC LPG stream and considerably higher than that for FCC. DCC LPG also contains a large amount of butylenes where the isobutylene fraction of the total butylenes is higher than that for FCC (38 to 42 wt % versus 17 to 33 wt %).[2] Subsequent MTBE production is enhanced over FCC operations because of the additional available isobutylene. These high olefin yields are achieved by selectively overcracking naphtha.

Large amounts of dry gas are produced by the DCC type I process because of the severe reactor temperature. DCC dry gas is rich in ethylene, which can be recovered for petro-

TABLE 3.2.2 DCC, FCC, and SC Operating Conditions

	DCC type I max, C_3	DCC type II max., isoolefins	FCC	SC
Temperatures:				
Reactor, °C	550–565	525–550	510–550	760–870
Regenerator, °C	670–700	670–700	670–730	—
Reactor pressure, kg/cm^2 gage	0.7–1.0	1.0–1.4	1.4–2.1	1.0
Reaction times, s	*	2 (riser)	2 (riser)	0.1–0.2
Catalyst/oil, wt/wt	9–15	7–11	5–8	—
Steam injection, wt % feed	20–30	10–15	2–7	30–80

*Riser residence time approximately 2 s plus 2–20 weight hourly space velocity (WHSV) in reactor bed.

Downloaded from Digital Engineering Library @ McGraw-Hill (www.digitalengineeringlibrary.com)
Copyright © 2004 The McGraw-Hill Companies. All rights reserved.
Any use is subject to the Terms of Use as given at the website.

DEEP CATALYTIC CRACKING, THE NEW LIGHT OLEFIN GENERATOR

TABLE 3.2.3 Yields for DCC Type I versus FCC and Steam Cracking

	Wt % of feed		
Component	DCC (type I)	FCC	SC
H_2	0.3	0.1	0.6
Dry gas (C_1-C_2)	12.6	3.8	44.0
LPG (C_3-C_4)	42.3	27.5	25.7
Naphtha (C_5-205°C)	20.2	47.9	19.3
Light cycle oil (205–330°C)	7.9	8.7	4.7
Slurry oil (330°C+)	7.3	5.9	5.7
Coke	9.4	6.1	—
Light olefins:			
C_2	5.7	0.9	28.2
C_3	20.4	8.2	15.0
C_4	15.7	13.1	4.1

Source: Lark Chapin and Warren Letzsch, "Deep Catalytic Cracking, Maximum Olefin Production," NPRA Annual Meeting, AM-94-43, Mar. 20–22, 1994.

chemical sales. Nonetheless, the DCC operation produces considerably less dry gas and more LPG than steam cracking does. The primary DCC product is propylene, whereas ethylene is the major SC component. (Steam cracking is a thermal reaction whereas DCC is predominantly catalytic.)

Because of high conversion, the DCC C_5+ liquid products are all highly aromatic. Consequently octane values of the DCC naphtha are very high. For this yield slate, an 84.7 motor octane number, clear (MONC) and 99.3 research octane number, clear (RONC) were measured.[3] DCC C_5+ naphtha has greater than 25 wt % benzene, toluene, and xylene (BTX) content and is a good BTX extraction candidate. Because of high diolefin content, selective hydrotreating is usually required. Selective hydrotreating can be achieved without losing octane. The coke make is somewhat higher than that in FCC operation. The higher heat of reaction required for the conversion of the feed to DCC products and the high reactor temperature add to the coke yield.

The sensitivity of olefin yield for three VGO types is shown in Table 3.2.4. Daqing VGO is highly paraffinic. Arabian light is moderately aromatic, while Iranian is highly aromatic. Propylene and butylene yields are very high for paraffinic feedstocks and decrease for the most aromatic feeds. The data were generated in RIPP's 2 barrel per day (BPD) DCC pilot unit but have been commercially verified.

DCC Maximum Isoolefin (Type II)

DCC type II yields are shown in Table 3.2.5. Large olefin yields are produced by overcracking naphtha at less severe conditions than for type I. The high olefin selectivity is indicative of very low hydrogen transfer rates. Butylene and amylene isomer breakdowns are shown in Table 3.2.6. Note that the isoolefins in the DCC type II operation approach their respective thermodynamic equilibrium. As a result, isobutylene and isoamylene yields are very large, each over 6.0 wt % of feed.

Downloaded from Digital Engineering Library @ McGraw-Hill (www.digitalengineeringlibrary.com)
Copyright © 2004 The McGraw-Hill Companies. All rights reserved.
Any use is subject to the Terms of Use as given at the website.

DEEP CATALYTIC CRACKING, THE NEW LIGHT OLEFIN GENERATOR

TABLE 3.2.4 DCC Type 1 Olefin Yields for Various VGO Feedstocks

	Daqing	Arabian Light*	Iranian*
Specific gravity	0.84	0.88	0.91
UOP K factor	12.4	11.9	11.7
Olefin yield, wt % feed:			
C_2	6.1	4.3	3.5
C_3	21.1	16.7	13.6
C_4	14.3	12.7	10.1

*Hydrotreated vacuum gas oil.

TABLE 3.2.5 DCC Maximum Isoolefin Yields (Type II)

Component	Yield, wt % of feed
C_2-	5.59
C_3-C_4	34.49
C_5+ naphtha	39.00
Light cycle oil	9.77
Heavy cycle oil	5.84
Coke	4.31
Loss	1.00
Light olefins:	
C_2	2.26
C_3	14.29
C_4	14.65
i-C_4	6.13
C_5	9.77
i-C_5	6.77

Source: Z. T. Li, W. Y. Shi, N. Pan, and F. K. Jaing, "DCC Flexibility for Isoolefins Production," *Advances in Fluid Catalytic Cracking,* ACS, vol. 38, no. 3, pp. 581–583.

DCC INTEGRATION

It is possible to incorporate a DCC process in either a petrochemical or a refining facility. Idled FCC units in operating facilities are particularly attractive for DCC implementation. A few possible processing scenarios are discussed.

One possible scenario is utilization of a DCC unit to increase propylene production in an ethylene facility. DCC naphtha, ethane, propane, and butane could be sent to the SC unit for additional ethylene yield. It may be possible to debottleneck the existing product splitter to accommodate the DCC gaseous stream. A petrochemical facility can be designed to take whole crude oil as the feed where the naphtha goes to a steam cracker and the heavier components go to a DCC unit.

Downloaded from Digital Engineering Library @ McGraw-Hill (www.digitalengineeringlibrary.com)
Copyright © 2004 The McGraw-Hill Companies. All rights reserved.
Any use is subject to the Terms of Use as given at the website.

DEEP CATALYTIC CRACKING, THE NEW LIGHT OLEFIN GENERATOR

TABLE 3.2.6 Olefin Isomer Distribution DCC Type II Operation

Component, wt %	Equilibrium value	DCC max. isoolefin
Butylene isomers:		
1-butene	14.7	12.8
t-2-butene	24.5	26.7
c-2-butene	16.7	18.6
Isobutylene	44.1	41.9
Amylene isomers:		
1-pentene	5.2	5.2
t-2-pentene	12.2	17.6
c-2-pentene	12.0	7.9
Isoamylene	70.6	69.3

Source: Z. T. Li, W. Y. Shi, N. Pan, and F. K. Jaing, "DCC Flexibility for Isoolefins Production," *Advances in Fluid Catalytic Cracking,* ACS, vol. 38, no. 3, pp. 581–583.

A DCC unit could be incorporated into a refining facility for polypropylene and styrene production. An example of such a processing scheme is shown in Fig. 3.2.3.

Another example of DCC integration is for supporting reformulated gasoline production, as shown in Fig. 3.2.4. An ethylene recovery unit using Stone & Webster's ARS technology could be incorporated into this scheme for polymer ethylene and propylene sales.

REFERENCES

1. Lark Chapin and Warren Letzsch, "Deep Catalytic Cracking Maximize Olefin Production," NPRA Annual Meeting, AM-94-43, Mar. 20–22, 1994.
2. C. Xie, W. Shi, F. Jiang, Z. Li, Y. Fan, Q. Tang, and R. Li, "Research and Development of Deep Catalytic Cracking (DCC Type II) for Isobutylene and Isomylene Production," *Petroleum Processing and Petrochemicals*, no. 5, 1995.
3. L. Zaiting, J. Fakang, and M. Enze, "DCC—A New Propylene Production Process from Vacuum Gas Oil," NPRA Annual Meeting, AM-90-40, Mar. 25–27, 1990.
4. Lark Chapin, W. S. Letzsch, and T. E. Swaty, "Petrochemical Options from Deep Catalytic Cracking and the FCCU," NPRA Annual Meeting, AM 98-44.
5. Wang Yamin, Li Caiying, Chen Zubi, and Zhong Xiaoxiang, "Recent Advances of FCC Technology and Catalyst in RIPP," *Proceedings of 6th Annual Workshop on Catalysts in Petroleum Refining and Petrochemicals,* December 1996. KFUPM, Dhahran, Saudi Arabia.
6. Andrew Fu, D. Hunt, J. A. Bonilla, and A. Batachari, "Deep Catalytic Cracking Plant Produces Propylene in Thailand," *Oil & Gas Journal,* Jan. 12, 1998.
7. Zaiting Li, Jiang Fukang, Xie Chaogang, and Xu Youhao, "DCC Technology and Its Commercial Experience," *China Petroleum Processing and Petrochemical Technology,* no. 4, December 2000.

Downloaded from Digital Engineering Library @ McGraw-Hill (www.digitalengineeringlibrary.com)
Copyright © 2004 The McGraw-Hill Companies. All rights reserved.
Any use is subject to the Terms of Use as given at the website.

DEEP CATALYTIC CRACKING, THE NEW LIGHT OLEFIN GENERATOR

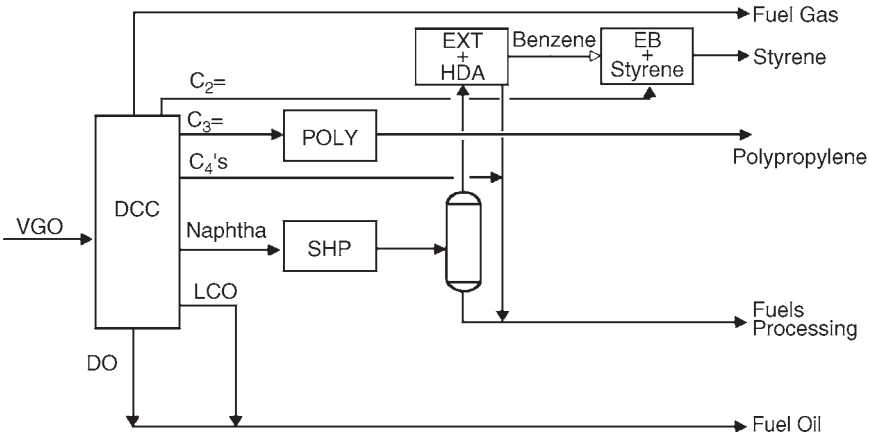

FIGURE 3.2.3 Polypropylene and styrene production scheme (EXT = aromatics extraction, HDA = hydrodealkylation, SHP 5 selective hydrogenation).

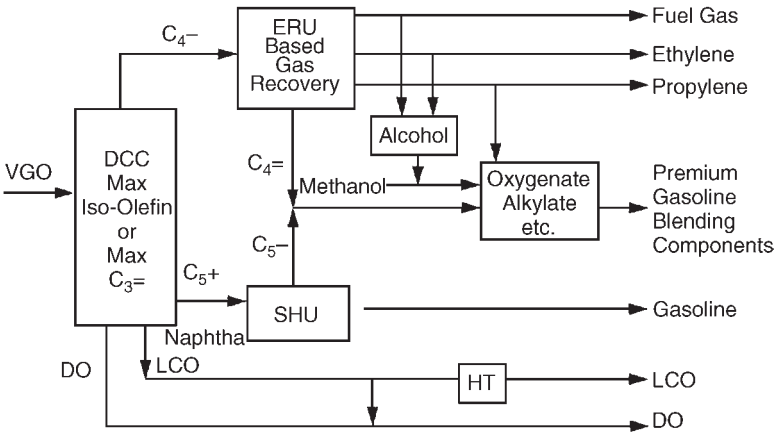

FIGURE 3.2.4 Reformulated gasoline production scheme.

Downloaded from Digital Engineering Library @ McGraw-Hill (www.digitalengineeringlibrary.com)
Copyright © 2004 The McGraw-Hill Companies. All rights reserved.
Any use is subject to the Terms of Use as given at the website.

Downloaded from Digital Engineering Library @ McGraw-Hill (www.digitalengineeringlibrary.com)
Copyright © 2004 The McGraw-Hill Companies. All rights reserved.
Any use is subject to the Terms of Use as given at the website.

Source: HANDBOOK OF PETROLEUM REFINING PROCESSES

CHAPTER 3.3
UOP FLUID CATALYTIC CRACKING PROCESS

Charles L. Hemler and Lester F. Smith
UOP LLC
Des Plaines, Illinois

INTRODUCTION

The fluid catalytic cracking (FCC) process is a process for the conversion of straight-run atmospheric gas oils, vacuum gas oils, certain atmospheric residues, and heavy stocks recovered from other refinery operations into high-octane gasoline, light fuel oils, and olefin-rich light gases. The features of the FCC process are relatively low investment, reliable long-run operations, and an operating versatility that enables the refiner to produce a variety of yield patterns by simply adjusting operating parameters. The product gasoline has an excellent front-end octane number and good overall octane characteristics. Further, FCC gasoline is complemented by the alkylate produced from the gaseous olefinic by-products because alkylate has superior midrange octane and excellent sensitivity.

In a typical FCC unit, the cracking reactions are carried out in a vertical reactor riser in which a liquid oil stream contacts hot powdered catalyst. The oil vaporizes and cracks to lighter products as it moves up the riser and carries the catalyst powder along with it. The reactions are rapid, and only a few seconds of contact time are necessary for most applications. Simultaneously with the desired reactions, *coke,* a carbonaceous material having a low ratio of hydrogen to carbon (H/C), deposits on the catalyst and renders it less catalytically active. The spent catalyst and the converted products are then separated; and the catalyst passes to a separate chamber, the regenerator, where the coke is combusted to rejuvenate the catalyst. The rejuvenated catalyst then passes to the bottom of the reactor riser, where the cycle begins again.

DEVELOPMENT HISTORY

With early development of the process taking place in the late 1930s, the first commercial FCC unit was brought on-stream in the United States in May 1942. This design, Model I, was quickly followed by a Model II design. A total of 31 Model II units were designed and built. Although engineered by different organizations, these units were similar in concept because the technology came from the same pool, a result of wartime cooperative efforts.

Downloaded from Digital Engineering Library @ McGraw-Hill (www.digitalengineeringlibrary.com)
Copyright © 2004 The McGraw-Hill Companies. All rights reserved.
Any use is subject to the Terms of Use as given at the website.

UOP FLUID CATALYTIC CRACKING PROCESS

Of those first units, several remain in operation today. The principal features of the Model II unit included a reactor vessel near ground level and the catalyst regenerator offset and above it. A rather short transfer line carried both catalyst and hydrocarbon vapor to a dense-bed reactor. Dual slide valves were used at various points in the unit, and this configuration resulted in a low-pressure regenerator with a higher-pressure reactor. Commercial evidence indicated that although conversions were rather low on these early units [40 to 55 liquid volume percent (LV %)], a large portion of the cracking reactions actually took place in the short transfer line carrying both hydrocarbon and catalyst.

After the war, the stacked FCC design (Fig. 3.3.1), which featured a low-pressure reactor stacked directly above a higher-pressure regenerator, was commercialized by UOP.* This design was a major step toward shifting the cracking reaction from the dense phase of the catalyst bed to the dilute phase of the riser. In the mid-1950s, the straight-riser design, also called the *side-by-side design* (Fig. 3.3.2), was introduced. In this unit, the regenerator was located near ground level, and the reactor was placed to the side in an elevated position. Regenerated catalyst, fresh feed, and recycle were directed to the reactor by means of a long, straight riser located directly below the reactor. Compared with earlier designs, product yields and selectivity were substantially improved.

A major breakthrough in catalyst technology occurred in the mid-1960s with the development of zeolitic catalysts. These sieve catalysts demonstrated vastly superior activity, gasoline selectivity, and stability characteristics compared to the amorphous silica-alumina catalysts then in use. The availability of zeolitic catalysts served as the basis for most of the process innovations that have been developed in recent years.

The continuing sequence of advances first in catalyst activity and then in process design led to an emphasis on achieving more of the reactions within the dilute phase of the riser, or *riser cracking,* as it is commonly called. In 1971, UOP commercialized a new design based on this riser cracking concept, which was then quickly extended to revamps of many of the existing units. Commercial results confirmed the advantages of this system compared to the older designs. Riser cracking provided a higher selectivity to gasoline and reduced gas and coke production that indicated a reduction in secondary cracking to undesirable products.

*Trademark and/or service mark of UOP.

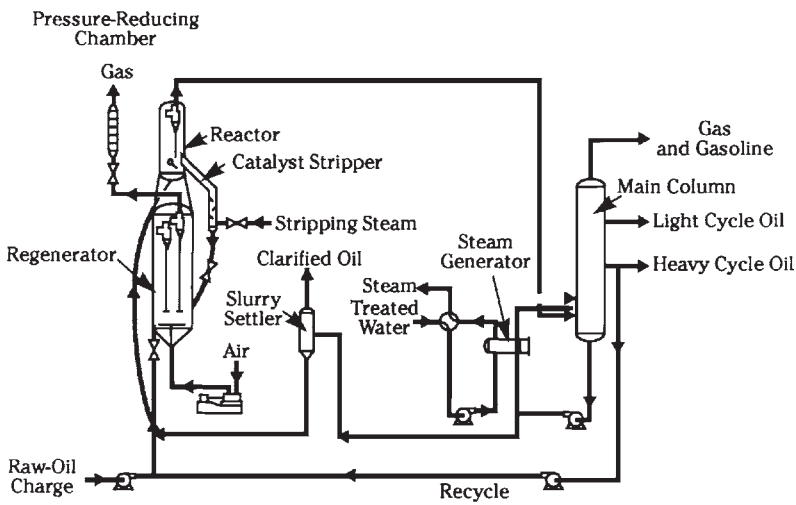

FIGURE 3.3.1 UOP stacked FCC unit.

Downloaded from Digital Engineering Library @ McGraw-Hill (www.digitalengineeringlibrary.com)
Copyright © 2004 The McGraw-Hill Companies. All rights reserved.
Any use is subject to the Terms of Use as given at the website.

UOP FLUID CATALYTIC CRACKING PROCESS

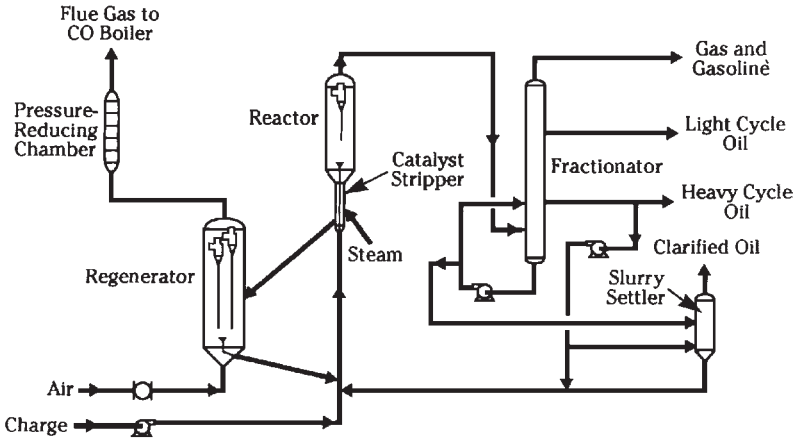

FIGURE 3.3.2 UOP straight-riser FCC unit.

This trend has continued throughout the years as process designs emphasize greater selectivity to desired primary products and a reduction of secondary by-products. When processing conditions were relatively mild, extended risers and rough-cut cyclones were adequate. As reaction severities were increased, vented risers and direct-connected cyclones were used to terminate the riser. To achieve even higher levels of hydrocarbon containment, further enhancements to prestrip, or displace, hydrocarbons that would otherwise be released from the cyclone diplegs into the reactor vessel now provide an even more selective operation. One example of such selective riser termination designs is the vortex separation system (VSS*) (Fig. 3.3.3). Such designs have truly approached the concept of all-riser cracking, where almost all the reaction now takes place within the riser and its termination system.

The emphasis on improved selectivity with all-riser cracking has placed a premium on good initial contact of feed and catalyst within the riser. Thus, much attention over the years has been given to improving the performance of the feed distributor as well as to properly locating it. The quantity of dispersant and the pressure drop required as well as the mechanical characteristics of various feed nozzles have been carefully studied, leading to the development of the highly successful Optimix* feed distributor.[1] The feed nozzle, though important, is just one component of a complete feed distribution system. Again the push for higher reaction severities has placed an even greater emphasis on the characteristics of this complete feed distribution system in the design of a modern FCC unit.

Thus far, the discussion has centered on the reactor design; however, significant changes have taken place on the regeneration side. For the first 20 years or so of its history, the regenerator of the FCC unit was operated so that the flue gas contained substantial quantities of carbon monoxide (CO) and carbon dioxide (CO_2). In this partial combustion mode, the spent catalyst was regenerated to the point of leaving a few tenths of a percent of carbon still remaining on the regenerated catalyst. A major improvement in FCC technology in the early 1970s was the development of catalysts and hardware to permit complete internal combustion of CO to CO_2. In 1973, an existing FCC unit was revamped to include a new high-efficiency concept in regeneration technology to achieve direct con-

*Trademark and/or service mark of UOP.

Downloaded from Digital Engineering Library @ McGraw-Hill (www.digitalengineeringlibrary.com)
Copyright © 2004 The McGraw-Hill Companies. All rights reserved.
Any use is subject to the Terms of Use as given at the website.

UOP FLUID CATALYTIC CRACKING PROCESS

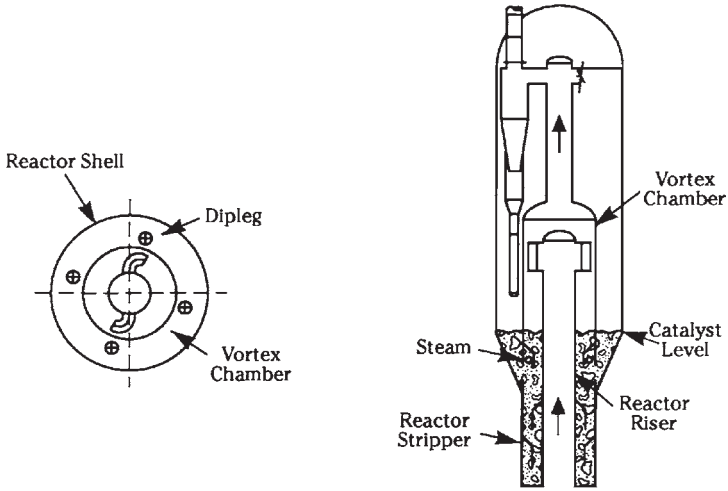

FIGURE 3.3.3 UOP VSS system.

version of CO within the unit. This advance was followed by the start-up in early 1974 of a new UOP FCC unit specifically designed to incorporate the new regenerator technology. The development of the new regenerator design and operating technique resulted in reduced coke yields, lower CO emissions (which satisfy environmental standards), and improved product distribution and quality.

A typical FCC unit configuration has a single regenerator to burn the coke from the catalyst. Although the regenerator can be operated in either complete or partial combustion, complete combustion has tended to predominate in new unit designs because an environmentally acceptable flue gas can be produced without the need for additional hardware, such as a CO boiler. This boiler would be required for the partial combustion mode to keep CO emissions low.

With the tightening of crude supplies and refinery economics in the late 1970s, refiners began to look more closely at the conversion of heavier feed components, particularly atmospheric residues. To effectively process highly contaminated residues, Ashland Oil and UOP cooperated to develop a fluidized catalytic cracking approach that would extend the feedstock range. The result of this cooperation, a process for reduced crude oil conversion, was first commercialized in 1983. Among its many innovative features were a two-stage regenerator to better handle the higher coke production that resulted from processing these residues and a new design for a catalyst cooler to help control regeneration temperatures. The two-stage regenerator aided in regulating the unit heat balance because one stage operated in complete combustion and the other operated in partial combustion. The single flue gas stream that was produced passed to a CO boiler to satisfy flue gas CO emissions. The new style of dense-phase catalyst cooler aided in not only regulating the regenerator temperature and resulting heat balance but also maintaining catalyst circulation to provide adequate reaction severity.[2]

Catalyst advancements (especially the improvements in metal tolerance), innovative design features, and this additional heat balance control from a reliable catalyst cooler have helped extend the range of acceptable feedstocks to include some rather heavy atmospheric residues. In fact, residue processing has steadily increased to the point that many older FCC units and about one-half of the new units licensed now process residue or a

Downloaded from Digital Engineering Library @ McGraw-Hill (www.digitalengineeringlibrary.com)
Copyright © 2004 The McGraw-Hill Companies. All rights reserved.
Any use is subject to the Terms of Use as given at the website.

UOP FLUID CATALYTIC CRACKING PROCESS

major residue component. Equipment such as the catalyst cooler (Fig. 3.3.4) has been extremely successful in revamps[3] and has found widespread application because of the cooler's ability to vary the level of heat removal in a controlled fashion.

The inventive and innovative spirit that has characterized FCC development from its early days has led to a variety of mechanical and process advancements to further improve the selectivity of the cracking reactions. Thus, improved feed distributors, more effective riser termination devices, and designs that emphasize selective short-time cracking have all been recent process advancements. The pivotal role of catalytic cracking in the refinery almost dictates that even further improvements will be forthcoming.

PROCESS CHEMISTRY

Because the chemistry of catalytic cracking is complex, only a broad outline is attempted here. Readers interested in more detailed discussion are referred to an article by Venuto and Habib.[4]

Feedstocks for the FCC process are complex mixtures of hydrocarbons of various types and sizes ranging from small molecules, like gasoline, up to large complex molecules of perhaps 60 carbon atoms. These feedstocks have a relatively small content of contaminant materials, such as organic sulfur, nitrogen compounds, and organometallic compounds. The relative proportions of all these materials vary with the geographic origin of the crude and the particular boiling range of the FCC feedstock. However, feedstocks can be ranked in terms of their *crackability,* or the ease with which they can be converted in an FCC unit. Crackability is a function of the relative proportions of paraffinic, naphthenic, and aromatic species in the feed.

Generally the crackability of FCC feedstocks can be correlated against some simple parameter like feedstock hydrogen content or the UOP characterization factor K

$$k = \frac{\sqrt[3]{T_B}}{sg}$$

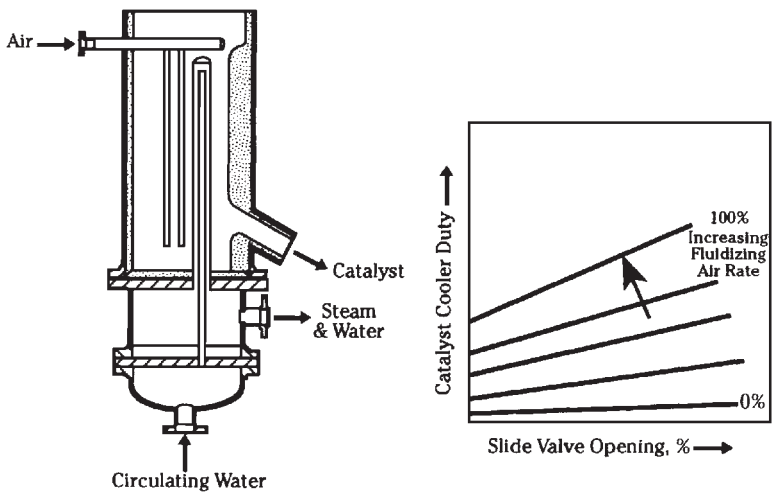

FIGURE 3.3.4 UOP catalyst cooler.

Downloaded from Digital Engineering Library @ McGraw-Hill (www.digitalengineeringlibrary.com)
Copyright © 2004 The McGraw-Hill Companies. All rights reserved.
Any use is subject to the Terms of Use as given at the website.

UOP FLUID CATALYTIC CRACKING PROCESS

where T_B is the cubic average boiling point of the feedstock, °R, and sg is its specific gravity. A large amount of experimental and commercial data can be classified as shown in Table 3.3.1.

Sulfur compounds do not seriously affect crackability; the cracked sulfur compounds are distributed into the liquid products, thus creating a need for product cleanup before final use. In addition, sulfur exits from the FCC unit in the form of H_2S and sulfur oxides, the latter posing a potential air pollution problem.

The organometallic compounds deposit on the circulating catalyst, and after regeneration, almost all the metals in the feedstock remain deposited on the catalyst. These deposited metals have two rather serious deleterious effects: They affect product distribution by causing more light gases, especially hydrogen, to be formed, and they have a serious deactivating effect on the catalyst. To counteract these effects, more fresh catalyst must be added to maintain activity. Heavy polynuclear aromatic-ring compounds are extremely refractory, and these molecules are generally accepted as coke precursors.

In general, the relative amounts of these contaminants in the FCC feedstock increase as the endpoint of the feedstock increases. As endpoints increase into the *nondistillable* range, above about 566°C (1050°F), the increase in these contaminants is dramatic, thus posing a major processing problem. One solution to this problem is to hydrotreat the FCC feedstock. Much of the sulfur and nitrogen leaves the hydrotreater in relatively easily disposable forms of H_2S and NH_3 rather than with the products or as flue gas oxides from the FCC unit. The metals are deposited irreversibly on the hydrotreating catalyst, which is periodically replaced. In addition to removing contaminants, hydrotreating upgrades the crackability of the FCC feed, and hydrotreated feeds do, in fact, crack with better product selectivity because of their increased hydrogen contents.

A carbonium ion mechanism can describe the chemistry for the cracking reactions and the products produced. All cracking catalysts, either the older amorphous silica alumina or modern zeolites, are acidic materials; and reactions of hydrocarbons over these materials are similar to well-known carbonium ion reactions occurring in homogeneous solutions of strong acids. These reactions are fundamentally different from thermal cracking. In thermal cracking, bond rupture is random; but in catalytic cracking, it is ordered and selective.

Various theories have been proposed to explain how the cracking process is initiated, that is, how the first carbonium ions are formed. One theory proposes that the carbonium ion is formed from an olefin, which in turn could be formed by thermal effects on initial catalyst-oil contact, or may be present in the feed. The temperatures involved in catalytic cracking are in the range where thermal cracking can also occur. Alternatively, the carbonium ion could be formed by the interaction of the hydrocarbon molecule with a Brönsted or Lewis acid site on the catalyst. The exact mechanism is not well understood.

Once formed in the feed, the carbonium ions can react in several ways:

- Crack to smaller molecules
- React with other molecules
- Isomerize to a different form
- React with the catalyst to stop the chain

TABLE 3.3.1 Feedstock Crackability

Range of characterization factor K	Relative crackability	Feedstock type
>12.0	High	Paraffinic
11.5–11.6	Intermediate	Naphthenic
<11.3	Refractory	Aromatic

Downloaded from Digital Engineering Library @ McGraw-Hill (www.digitalengineeringlibrary.com)
Copyright © 2004 The McGraw-Hill Companies. All rights reserved.
Any use is subject to the Terms of Use as given at the website.

UOP FLUID CATALYTIC CRACKING PROCESS

The cracking reaction normally follows the rule of β scission. The C—C bond in the β position relative to the positively charged carbon tends to be cleaved:

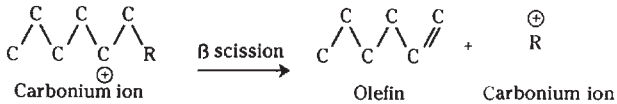

This reaction is most likely because it involves a rearrangement of electrons only. Both of the fragments formed are reactive. The olefin may form a new carbonium ion with the catalyst. The R^+, a primary carbonium ion, can react further, usually first by rearrangement to a secondary carbonium ion and repetition of the Ω scission.

The relative stability of carbonium ions is shown in the following sequence:

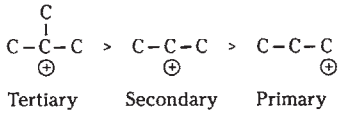

Reactions in the system will always proceed toward the formation of the more stable carbonium ion. Thus, isomerizations of secondary to tertiary carbonium ions are common. These reactions proceed by a series of steps including migration of hydride or even alkyl or aryl groups along the carbon chain. Of course, this reaction leads to a product distribution that has a high ratio of branched- to straight-chain isomers.

The subject of catalytic coke formation by cracking catalysts, especially its chemical nature and formation, is also a complex topic for which many theories have been proposed. The formation of coke on the catalyst, an unavoidable situation in catalytic cracking, is likely due to dehydrogenation (degradation reactions) and condensation reactions of polynuclear aromatics or olefins on the catalyst surface. As coke is produced through these mechanisms, it eventually blocks the active acid sites and catalyst pores. The only recourse is to regenerate the catalyst to retain its activity by burning the coke to CO and CO_2 in the FCC regenerator. This coke combustion becomes an important factor in the operation of the modern FCC.

THERMODYNAMICS OF CATALYTIC CRACKING

As in the chemistry of cracking, the associated thermodynamics are complex because of the multitude of hydrocarbon species undergoing conversion. The key reaction in cracking, β scission, is not equilibrium-limited, and so thermodynamics are of limited value in either estimating the extent of the reaction or adjusting the operating variables. Cracking of relatively long-chain paraffins and olefins can go to more than 95 percent completion at cracking temperature.

Certain hydrogen-transfer reactions act in the same way. Isomerization, transalkylation, dealkylation, and dehydrogenation reactions are intermediate in the attainment of equilibrium. Condensation reactions, such as olefin polymerization and paraffin alkylation, are less favorable at higher temperatures.

The occurrence of both exothermic and endothermic reactions contributes to the overall heat of reaction, which is a function of feedstock, temperature, and extent of conversion. In general, highly endothermic cracking reactions predominate at low to intermediate

Downloaded from Digital Engineering Library @ McGraw-Hill (www.digitalengineeringlibrary.com)
Copyright © 2004 The McGraw-Hill Companies. All rights reserved.
Any use is subject to the Terms of Use as given at the website.

UOP FLUID CATALYTIC CRACKING PROCESS

conversion levels. At high conversion, some of the exothermic reactions begin to exert an influence. Overall, the reaction is quite endothermic, and heat must be supplied to the system. This heat is provided by the regenerated catalyst. A more detailed description of the FCC unit heat balance will be presented later.

CATALYST HISTORY

Paralleling the significant improvements in FCC unit design was a corresponding improvement in FCC catalysts. The first catalysts used were ground-up amorphous silica alumina. Whether synthetic or naturally occurring, these catalysts suffered from low activity and poor stability relative to the catalysts available today. Additionally, they had poor fluidization characteristics. Often, fines had to be collected from the flue gas and returned to the unit to assist in maintaining smooth catalyst circulation.

In 1946, spray-dried (microspheroidal) synthetic silica-alumina catalysts were introduced. This type of catalyst, containing 10 to 13 percent alumina, was in general use until a more active and stable catalyst high in alumina (25 wt % alumina) became available in the late 1950s. In addition to improved activity and stability, these spray-dried catalysts had improved fluidization characteristics.

The most significant catalyst development occurred during the early 1960s, when molecular sieves were introduced into fluid cracking catalysts. The resulting catalysts exhibited significantly higher activity and stability compared with catalysts available at the time. These crystalline catalysts were, and are, ideally suited for the short-contact-time riser cracking concept. Besides being more active, these materials are more selective toward gasoline production compared to the initial amorphous type.

A wide variety of catalysts have been used in an FCC unit: from low-activity amorphous catalysts to high-activity zeolite-containing catalysts. As an example of relative activities, Table 3.3.2 summarizes pilot-plant results from processing the same feedstock at identical conditions over various catalysts. The present, commercially available high-activity zeolitic catalysts exhibit widely varying matrix compositions, zeolite content, and chemical consistency; yet many can provide the high activity levels required for modern operations.

The chief cracking component of the FCC catalyst is a Y-type zeolite, and an indicator of its content is the catalyst micropore surface area. The hydrogen-transfer capabilities of the zeolite can be adjusted by varying the degree of rare earth exchange of the catalyst. A second component is an active alumina which helps to crack larger feed molecules. The mesopore surface area gives an indication of the active alumina content. Different types of alumina can be used to adjust its function from an active cracking role to just a binder for mechanical strength. A typical range of characteristics for commercially available FCC catalyst is shown in Table 3.3.3.

TABLE 3.3.2 Effect of Catalyst Activity*

	Amorphous	Low-activity sieve	Moderate-activity sieve	High-activity sieve
Conversion, LV %	63.0	67.9	76.5	78.9
Gasoline, LV %	45.1	51.6	55.4	57.6
RONC	93.3	92.6	92.3	92.3

*Basis: Middle East sour gas oil, 23.7° API gravity (sg = 0.912), 11.84 UOP K factor, 2.48 wt % sulfur.

Note: RONC = research octane number, clear; °API = degrees on American Petroleum Institute scale.

Downloaded from Digital Engineering Library @ McGraw-Hill (www.digitalengineeringlibrary.com)
Copyright © 2004 The McGraw-Hill Companies. All rights reserved.
Any use is subject to the Terms of Use as given at the website.

UOP FLUID CATALYTIC CRACKING PROCESS

TABLE 3.3.3 Fresh FCC Catalyst Characteristics

Apparent bulk density, g/mL	0.7–0.9
Total surface area, m^2/g	130–370
Micropore surface area, m^2/g	100–250
Mesopore surface area, m^2/g	30–120
Rare earth content, wt % Re_2O_3	
For low micropore surface area	0.3–1.5
For high micropore surface area	0.8–3.5
Alumina, wt % Al_2O_3	25–50

Many of today's catalysts exhibit a trend toward attrition resistance in response to the concern for reducing particulate emissions. This trend has also affected modern FCC unit design by reducing the amount of catalyst carried to the cyclones.

One important area that has received major attention in the catalyst field has been the separate inclusion of specific additives to enhance a particular process performance function. Thus individual solid catalytic additives can be introduced, for example, (1) to help promote the combustion of carbon monoxide in the regenerator; (2) to assist in cracking portions of the gasoline, thereby making more light olefins and increasing octane; (3) to enhance bottoms cracking; (4) to reduce the concentration of sulfur oxides in the flue gas; and (5) to lower the sulfur content of the gasoline product.

PROCESS DESCRIPTION

Every FCC complex contains the following sections (Fig. 3.3.5):

- *Reactor and regenerator.* In the reactor, the feedstock is cracked to an effluent containing hydrocarbons ranging from methane through the highest-boiling material in the feedstock plus hydrogen and hydrogen sulfide. In the regenerator, the circulating spent catalyst is rejuvenated by burning the deposited coke with air at high temperatures.
- *Main fractionator.* Here the reactor effluent is separated into the various products. The overhead includes gasoline and lighter material. The heavier liquid products, heavier naphtha, and cycle oils are separated as sidecuts, and slurry oil is separated as a bottoms product.
- *Gas concentration unit.* In this section, usually referred to as the *unsaturated gas plant,* the unstable gasoline and lighter products from the main fractionator overhead are separated into fuel gas, C_3- C_4 for alkylation or polymerization, and debutanized gasoline that is essentially ready for use except for possible chemical treating.

Depending on the objectives of the refiner, some unconverted materials in the feedstock boiling range may be recycled to the reactor. In general, *conversion,* which is typically defined as 100 minus the liquid volume percentage of products heavier than gasoline, is never carried to completion. Some main-column bottoms material, referred to as *clarified oil* or *slurry oil,* is a product usually used for fuel oil blending. Light cycle oil, recovered as a sidecut product, is generally used for home heating, although a fraction might be suitable for diesel fuel blending stock.

The modern FCC unit is likely to have any of a number of optional units associated with the flue gas system. As discussed later, the flue gas contains a significant amount of available energy that can be converted to usable forms. Typically, the flue gas is composed of cat-

Downloaded from Digital Engineering Library @ McGraw-Hill (www.digitalengineeringlibrary.com)
Copyright © 2004 The McGraw-Hill Companies. All rights reserved.
Any use is subject to the Terms of Use as given at the website.

UOP FLUID CATALYTIC CRACKING PROCESS

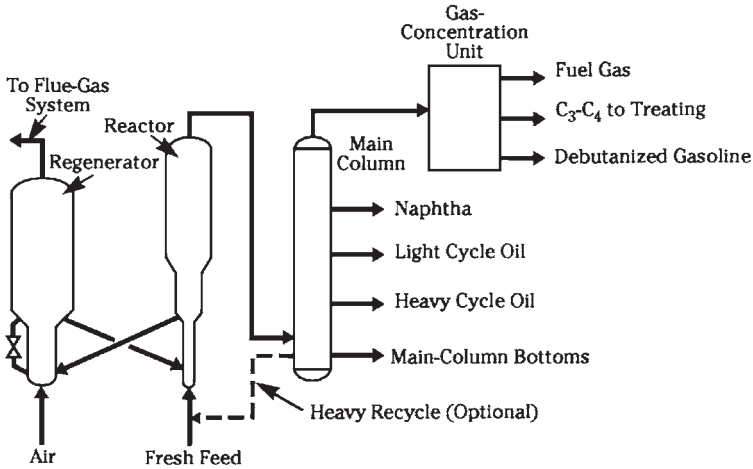

FIGURE 3.3.5 Overall flow diagram for a UOP FCC complex excluding flue gas system option.

alyst fines; nitrogen from the air used for combustion; the products of coke combustion (the oxides of carbon, sulfur, nitrogen, and water vapor); and trace quantities of other compounds. The flue gas exits the regenerator at high temperature, approximately 700 to 780°C (1292 to 1436°F), and at pressures of typically 10 to 40 lb/in^2 gage (0.7 to 2.8 bar gage). The thermal and kinetic energy of the flue gas can be converted to steam or used to drive a turboexpander-generator system for electric power generation. Unconverted CO in the flue gas can be combusted to CO_2 in a CO boiler that produces high-pressure steam. Catalyst fines may be removed in an electrostatic precipitator or a specially designed third-stage separator system.

Reactor-Regenerator Section

The heart of a typical FCC complex (Fig. 3.3.6) is the reactor-regenerator section. In the operation of the FCC unit, fresh feed and, depending on product distribution objectives, recycled cycle oils are introduced into the riser together with a controlled amount of regenerated catalyst. The charge may be heated, either by heat exchange or, for some applications, by a fired heater.

The hot regenerated catalyst vaporizes the feed, the cracking begins, and the resultant vapors carry the catalyst upward through the riser. At the top of the riser, the desired cracking reactions are completed, and the catalyst is quickly separated from the hydrocarbon vapors to minimize secondary reactions. The catalyst-hydrocarbon mixture from the riser is discharged into the reactor vessel through a device that achieves a significant degree of catalyst-gas separation. Final separation of catalyst and product vapor is accomplished by cyclone separation.

The reactor effluent is directed to the FCC main fractionator for resolution into gaseous light olefin coproducts, FCC gasoline, and cycle stocks. The spent catalyst drops from the reactor vessel into the stripping section, where a countercurrent flow of steam removes interstitial and some adsorbed hydrocarbon vapors. Stripped spent catalyst descends through a standpipe and into the regenerator.

Downloaded from Digital Engineering Library @ McGraw-Hill (www.digitalengineeringlibrary.com)
Copyright © 2004 The McGraw-Hill Companies. All rights reserved.
Any use is subject to the Terms of Use as given at the website.

UOP FLUID CATALYTIC CRACKING PROCESS

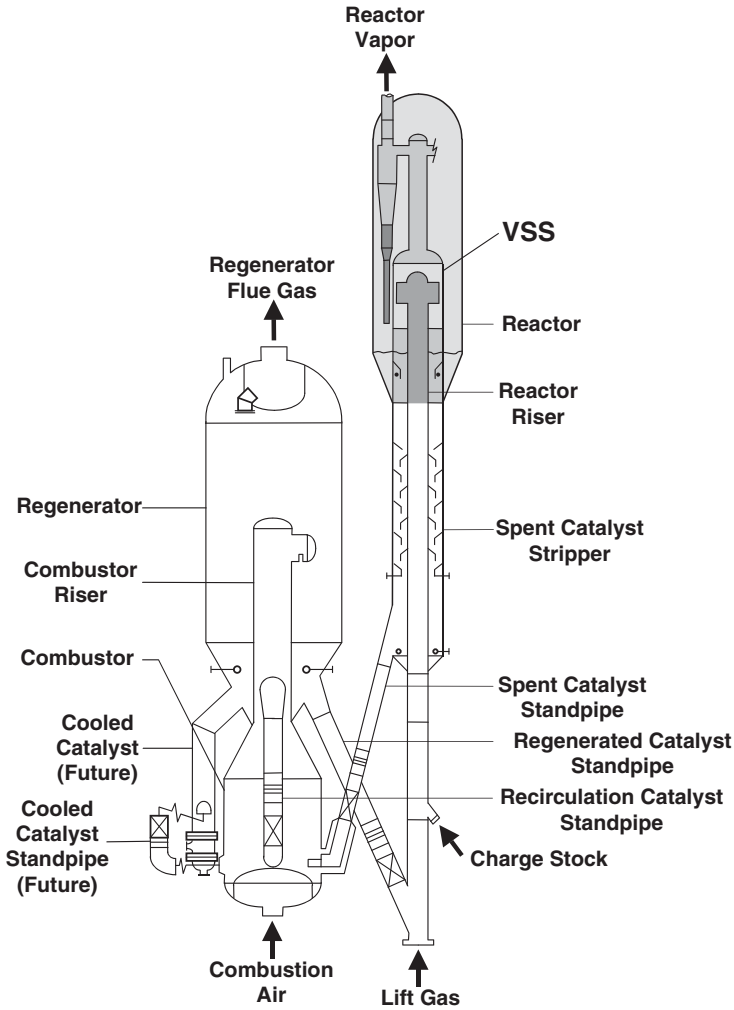

FIGURE 3.3.6 Modern UOP combustor-style FCC unit.

During the cracking reaction, a carbonaceous by-product is deposited on the circulating catalyst. This material, called *coke,* is continuously burned off the catalyst in the regenerator. The main purpose of the regenerator is to reactivate the catalyst so that it can continue to perform its cracking function when it is returned to the conversion section. The regenerator serves to gasify the coke from the catalyst particles and, at the same time, to impart sensible heat to the circulating catalyst. The energy carried by the hot regenerated catalyst is used to satisfy the thermal requirements of the cracking section of the unit (the *heat-balance* concept is be discussed in greater detail in the next section).

Depending on the specific application, the regenerator may be operated at conditions that achieve complete or partial internal combustion of CO to CO_2; or alternatively, CO

Downloaded from Digital Engineering Library @ McGraw-Hill (www.digitalengineeringlibrary.com)
Copyright © 2004 The McGraw-Hill Companies. All rights reserved.
Any use is subject to the Terms of Use as given at the website.

UOP FLUID CATALYTIC CRACKING PROCESS

may be converted to CO_2 in an external CO boiler. If internal conversion of CO to CO_2 is used, the sensible heat of the flue gas can be recovered in a waste heat boiler. Flue gas is directed through cyclone separators to minimize catalyst entrainment prior to discharge from the regenerator.

To maintain the activity of the working catalyst inventory at the desired level and to make up for any catalyst lost from the system with the flue gas, fresh catalyst is introduced into the circulating catalyst system from a catalyst storage hopper. An additional storage hopper is provided to hold spent catalyst withdrawn from the circulating system as necessary to maintain the desired working activity and to hold all the catalyst inventory when the FCC unit is shut down for maintenance and repairs.

Heat Balance

The schematic diagram of the FCC heat balance in Fig. 3.3.7 shows the close operational coupling of the reactor and regenerator sections. As with other large commercial process units, the FCC unit is essentially adiabatic. The overall energy balance can be written in the following form:

$$\underset{\substack{\text{Heat of}\\\text{combustion}\\\text{of coke}}}{Q_{RG}} = \underset{\substack{\text{Enthalpy}\\\text{difference between}\\\text{products and feed}\\\text{including any}\\\text{recycle streams}}}{(Q_P - Q_{FD})} + \underset{\substack{\text{Enthalpy difference}\\\text{between flue gas and}\\\text{regeneration air}}}{(Q_{FG} - Q_A)} + \underset{\substack{\text{Heat of}\\\text{reaction}}}{Q_{RX}} + \underset{\text{Losses}}{(Q_{L1} + Q_{L2})}$$

This equation, which has been greatly simplified to present only the major heat terms, describes the basis of the overall reactor-regenerator heat balance. The energy released by burning coke in the regenerator Q_{RG} is sufficient to supply all the heat demands for the rest of the reactor and regenerator. Heat is needed to

- Bring the feed and recycle streams to reaction temperatures
- Vaporize the feed and recycle streams

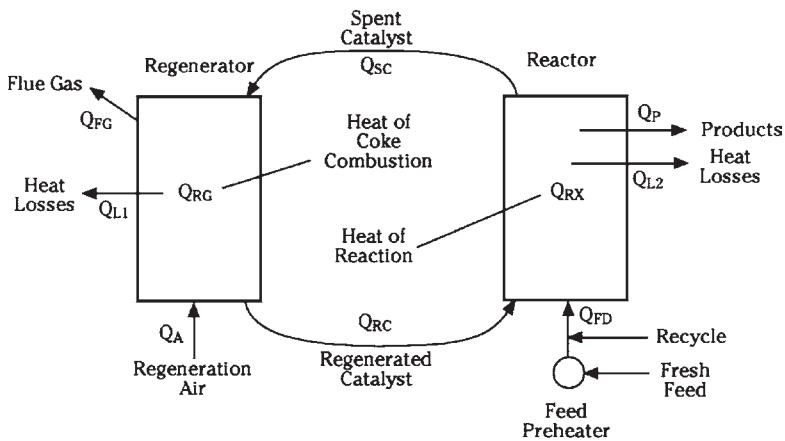

FIGURE 3.3.7 FCC heat balance.

Downloaded from Digital Engineering Library @ McGraw-Hill (www.digitalengineeringlibrary.com)
Copyright © 2004 The McGraw-Hill Companies. All rights reserved.
Any use is subject to the Terms of Use as given at the website.

UOP FLUID CATALYTIC CRACKING PROCESS

- Supply the endothermic heat of reaction and various smaller reactor side energy requirements and losses
- Raise the incoming regeneration air temperature to flue gas conditions and to satisfy regenerator losses

The circulating catalyst becomes the mechanism for transferring the needed energy from the regenerator to satisfy the reactor requirements. Thus, all the reactor heat requirements are supplied by the enthalpy difference between regenerated and spent catalyst ($Q_{RC} - Q_{SC}$).

The circulating catalyst rate then becomes a key operating variable because it not only supplies heat but also affects conversion according to its concentration in the reactor relative to oil, expressed in terms of the well-known *catalyst/oil ratio.* In practice, the catalyst/oil ratio is not a directly controlled variable: changes in the ratio result indirectly from changes in the main operating variables. For instance, an increase in the catalyst/oil ratio results from an increase in reactor temperature, a decrease in regenerator temperature, or a decrease in feed preheat temperature. When process conditions are changed so that an increase in the catalyst/oil ratio occurs, an increase in conversion is also typically observed.

Normally the catalyst/oil weight ratio is tied directly to the FCC unit heat balance. One significant exception to that occurs when carbonized catalyst from the reactor is recycled to the feed contacting zone without passing to the regenerator. Termed *RxCat** technology and developed by UOP, this approach provides for higher catalyst/oil ratios in the reaction zone although some of the catalyst now has a higher carbon content. RxCat technology is aimed at those operations where there is a high-quality feedstock producing a low delta-coke laydown and where additional severity or light olefins are desired. RxCat technology is an integral part of UOP's PetroFCC* process, which will be discussed later in this section.

Fractionation Section

Product vapors from the reactor are directed to the main fractionator, where gasoline and gaseous olefin-rich coproducts and other light ends are taken overhead and routed to the gas concentration unit. Light cycle oil, which is recovered as a sidecut, is stripped for removal of light ends and sent to storage. Net column bottoms are yielded as slurry or clarified oil. Because of the high efficiency of the catalyst-hydrocarbon separation system used in the modern UOP reactor design, catalyst carryover to the fractionator is minimized; the net heavy product yielded from the bottom of the fractionator does not have to be clarified unless the material is to be used in some specific application, such as the production of carbon black, that requires low solids content. In some instances, heavy material can be recycled to the reactor riser.

Maximum usage is made of the heat available at the main column. Typically, light and heavy cycle oils are used in the gas concentration section for heat-exchange purposes, and steam is generated by a circulating main-column bottoms stream.

Gas Concentration Section

The gas concentration section, or unsaturated gas plant, is an assembly of absorbers and fractionators that separate the main-column overhead into gasoline and other desired light products. Sometimes olefinic gases from other processes such as coking are sent to the FCC gas concentration section.

*Trademark and/or service mark of UOP.

Downloaded from Digital Engineering Library @ McGraw-Hill (www.digitalengineeringlibrary.com)
Copyright © 2004 The McGraw-Hill Companies. All rights reserved.
Any use is subject to the Terms of Use as given at the website.

UOP FLUID CATALYTIC CRACKING PROCESS

A typical four-column gas concentration plant is shown in Fig. 3.3.8. Gas from the FCC main-column overhead receiver is compressed and directed with primary-absorber bottoms and stripper overhead gas through a cooler to the high-pressure receiver. Gas from this receiver is routed to the primary absorber, where it is contacted by the unstabilized gasoline from the main-column overhead receiver. The net effect of this contacting is a separation between C_3+ and C_2- fractions on the feed to the primary absorber. Primary-absorber offgas is directed to a secondary, or "sponge," absorber, where a circulating stream of light cycle oil from the main column is used to absorb most of the remaining C_5+ material in the sponge-absorber feed. Some C_3 and C_4 material is also absorbed. The sponge-absorber-rich oil is returned to the FCC main column. The sponge-absorber overhead, with most of the valuable C_3+ material removed but including H_2S, is sent to fuel gas or other processing.

Liquid from the high-pressure separator is sent to a stripper column, where most of the C_2- is removed overhead and sent back to the high-pressure separator. The bottoms liquid from the stripper is sent to the debutanizer, where an olefinic C_3-C_4 product is separated. In some instances this stream can be further separated for individual C_3 and C_4 recovery, or it can be sent to either alkylation or catalytic condensation for further gasoline production. The debutanizer bottoms, which is the stabilized gasoline, is sent to treating, if necessary, and then to storage.

This section has described the minimum gas concentration configuration. Sometimes a gasoline splitter is included to split the gasoline into light and heavy cuts. Any H_2S in the fuel gas or C_3-C_4 product can be removed through absorption in an amine system. Thus, some gas concentration plants contain six or seven columns.

MODERN UOP FCC UNIT

A modern FCC unit reflects the combination of process and mechanical features probably as well as any process unit in the refinery. Fundamentals of fluidization, fluid flow, heat transfer, mass transfer, reaction kinetics, thermodynamics, and catalysis are applied and combined with the practical experience relating to mechanical design to produce an

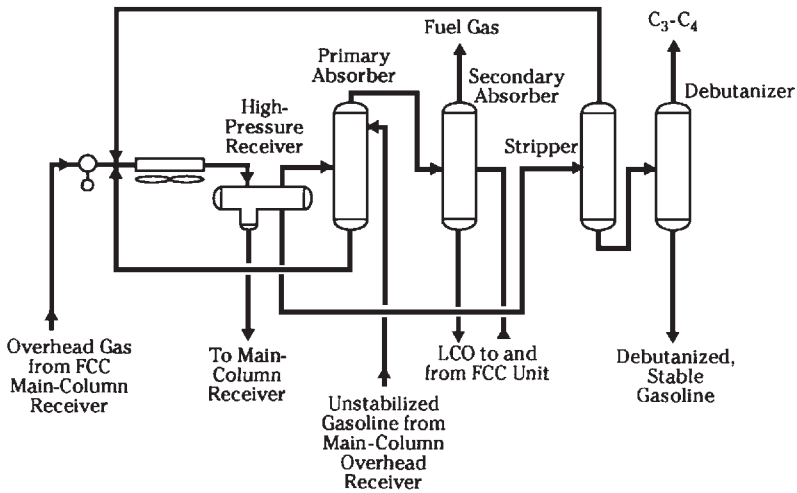

FIGURE 3.3.8 Typical FCC gas concentration plant.

Downloaded from Digital Engineering Library @ McGraw-Hill (www.digitalengineeringlibrary.com)
Copyright © 2004 The McGraw-Hill Companies. All rights reserved.
Any use is subject to the Terms of Use as given at the website.

UOP FLUID CATALYTIC CRACKING PROCESS

extremely rugged unit with some sophisticated features. The result is a successful process that combines selective yields with a long run length.

Reactor

The advantages of a reaction system that emphasizes short-contact-time cracking have led to a modern unit design (Fig. 3.3.6) that is well suited for today's high-activity, superior-selectivity zeolitic catalysts. Great emphasis has been placed on the proper initial contacting of feedstock and catalyst followed by a controlled plug-flow exposure. The reaction products and catalyst are then quickly separated as the hydrocarbons are displaced and stripped from the catalyst before the catalyst passes to the regenerator. This all-riser cracking mode produces and preserves a gasoline-selective yield pattern that is also rich in C_3-C_4 olefins. Higher reaction temperatures have been used to further increase gasoline octanes and yields of the light olefins for downstream alkylation and etherification units.

These individual reaction-side improvements have not been limited to just new unit designs. Many older FCC units have been revamped in one or more of the important areas of feed-catalyst contacting, riser termination, or catalyst stripping. The yield benefits when revamping to a more contained VSS riser with an improved stripping configuration and an elevated Optimix* feed distribution system are presented in Table 3.3.4. For demonstration purposes, the revamped unit was operated for a period at the same conversion level as before the revamp. Then the unit was operated to maintain coke make and keep a maximum utilization of the air blower. The improved selectivity of the revamped unit is apparent and demonstrates why this type of revamp has been widely accepted. In addition, risers, catalyst standpipes, and slide valves have been routinely replaced as many of these older units have pushed for much higher operating capacities over the years.

Regenerator

A modern UOP FCC unit features a high-efficiency regenerator design, termed a *combustor regenerator.* The combustor-style regenerator was developed to provide a more uniform coke-air distribution and to enhance the ability to burn completely. The regenerator uses a fast fluidized bed as a low-inventory carbon-burning zone followed by a

TABLE 3.3.4 Commercial Performance, Pre- and Postrevamp

		Postrevamp	
	Prerevamp	Same conversion	Same coke yield
Feed rate	Base	Base	Base
Feed, sg	0.916	0.918	0.918
UOP K factor	11.68	11.7	11.69
Feed temp., °F	380	430	420
Reactor temp., °F	975	950	990
Yields			
C_2-, wt %	2.32	1.82	2.63
$C_3 + C_4$, vol %	27.2	24.6	29.7
Gasoline, vol %	57.2	60.7	59.6
Light cycle oil, vol %	17.1	17.4	15.1
Clarified oil, vol %	8.9	8.4	6.9
Coke, wt %	Base	0.91 × base	Base
Conversion, vol %	74.0	74.2	78.0

Downloaded from Digital Engineering Library @ McGraw-Hill (www.digitalengineeringlibrary.com)
Copyright © 2004 The McGraw-Hill Companies. All rights reserved.
Any use is subject to the Terms of Use as given at the website.

UOP FLUID CATALYTIC CRACKING PROCESS

higher-velocity transport-riser heat-exchange zone. The overall combination has excellent catalyst retention and produces flue gas and regenerated catalyst of uniform temperature. Regeneration efficiency and operability are improved, and catalyst inventory is substantially decreased. This reduction in catalyst inventory has economic significance not only from the initial cost of the first catalyst inventory but also from a daily catalyst makeup cost as well.

The combustor configuration was first introduced in the 1970s. Before that, FCC regenerators were operated typically to produce a partial combustion of the coke deposited on the catalyst. Some coke, generally a few tenths of a weight percent, was left on the catalyst after regeneration. The flue gas produced from the coke that was burned in the regenerator often contained about equal proportions of CO and CO_2. As environmental considerations were becoming more significant, a flue gas CO boiler was needed to reduce CO emissions to an acceptable level. If the regenerator can be modified to achieve a more complete combustion step, the capital cost of a CO boiler can be eliminated.

The extra heat of combustion that would be available from burning all the CO to CO_2 also could make a significant change in the heat balance of the FCC unit. The increased heat availability means that less coke needs to be burned to satisfy a fixed reactor heat demand. Because additional burning also produces a higher regenerator temperature, less catalyst is circulated from the regenerator to the reactor.

Another important effect that results from the increased regenerator temperature and the extra oxygen that is added to achieve complete combustion is a reduction in the residual carbon left on the regenerated catalyst. The lower this residual carbon, the higher the effective catalyst activity. From a process viewpoint, complete combustion produces a reduced catalyst circulation rate, but the catalyst has a higher effective activity. Because less coke was needed to satisfy the heat balance, the reduction in coke yield led to a corresponding increase in FCC products.

To assist in the burning of CO, small quantities of noble metal additives are extremely effective when blended with the catalyst. This *promoted catalyst,* as it was called, was widely used in existing units and as an alternative to a complete mechanical modification of the regenerator to a combustor-style configuration. New units were designed with the combustor configuration, which could operate in complete combustion without the more expensive promoted catalyst.

The combustor-style regenerator has proved itself in many varied operations over the years. It has been shown to be an extremely efficient device for burning carbon and burning to low levels of CO. Whether for very small or large units, afterburning has been virtually eliminated, and low levels of carbon on regenerated catalyst are routinely produced.

The tighter control of emissions from the FCC unit, and in particular the regenerator, has led to a significant flue-gas-handling train for the gases coming from the regenerator. In addition to the normal heat removal from the flue gas, electrostatic precipitators and scrubbers are being used for particulate removal, and a new generation of third-stage separators has been developed that can help achieve low particulate emissions. Wet gas scrubbing and other treating steps can lower the sulfur and nitrogen oxides in the flue gas, and tighter environmental regulations have mandated the addition of such systems.

Yield Versatility

One of the strengths of the FCC process is its versatility to produce a wide variety of yield patterns by adjusting basic operating parameters. Although most units have been designed for gasoline production, UOP has designed units for each of the three major operational modes:

Downloaded from Digital Engineering Library @ McGraw-Hill (www.digitalengineeringlibrary.com)
Copyright © 2004 The McGraw-Hill Companies. All rights reserved.
Any use is subject to the Terms of Use as given at the website.

UOP FLUID CATALYTIC CRACKING PROCESS

Gasoline Mode. The most common mode of operation of the FCC unit is aimed at the maximum production of gasoline. This mode is better defined as an operation producing a *high* gasoline yield of a specified octane number.

This condition requires careful control of reaction severity, which must be high enough to convert a substantial portion of the feed but not so high as to destroy the gasoline that has been produced. This balance normally is achieved by using an active and selective catalyst and enough reaction temperature to produce the desired octane. The catalyst circulation rate is limited, and reaction time is confined to a short exposure. Because this severity is carefully controlled, no recycle of unconverted components is normally needed.

Distillate Mode. If the reaction severity is strictly limited, then the FCC unit can be used for the production of distillates. Changing operating conditions can shift from the normally gasoline-oriented yield distribution to one with a more nearly equal ratio of gasoline to cycle oil. Additional distillates can be produced at the expense of gasoline by reducing the endpoint of the gasoline and dropping the additional material into the light cycle oil product. The usual limitation in this step is reached when the resulting cycle oil reaches a particular flash point specification.

High-Severity (LPG) Mode. If additional reaction severity is now added beyond the gasoline mode, a high-severity operation producing additional light olefins and a higher-octane gasoline will result. This case is sometimes described as an LPG mode (for the increase in C_3 and C_4 materials which can be used as liquefied petroleum gas). If isobutane is available to alkylate the light olefins or if they are etherified or polymerized into the gasoline boiling range, high total gasoline yields and octanes can be produced.

Typical yield patterns for these three modes of operation are shown in Table 3.3.5. The feedstock for these cases was a Middle East vacuum gas oil (VGO). These yields are typical for a particular feedstock. In general, FCC yield patterns are a function of feedstock properties; for instance, a feedstock with a lower UOP K factor and hydrogen content is more difficult to crack and produces a less favorable yield pattern.

The data in Table 3.3.5 show certain trends. As the severity of the FCC unit is increased from low to high, the production of coke and light ends increases, gasoline octane increases, and in general, the liquid products become more hydrogen deficient. Also, the high-severity case overcracks a considerable amount of the gasoline to C_3-C_4 material.

PetroFCC. This is a specialized application where even greater reaction severity is utilized than for the high-severity (LPG) mode. For all the previous modes, even though the specifically desired product was different, the primary focus remained the production of transportation fuels. However, for PetroFCC, the aim is now to produce a yield pattern with a petrochemical focus.[5] Utilizing a combination of specific processing conditions and catalyst, selected mechanical hardware, and a high concentration of shape-selective additive, an even higher-severity operation can be achieved. Extremely high yields of light olefins, and particularly propylene, are produced. At the same time, the gasoline product, which is now greatly reduced in volume, has become highly aromatic—aromatic enough and concentrated enough so that the single ring aromatics found there can be recovered for their petrochemical value.

A comparison between a traditional gasoline mode operation and a PetroFCC operation for the same moderately contaminated gas oil–residue feed blend is shown in Fig. 3.3.9. Note that the C_4 and lighter material for the PetroFCC is about 2.5 times that for the gasoline operation.

Downloaded from Digital Engineering Library @ McGraw-Hill (www.digitalengineeringlibrary.com)
Copyright © 2004 The McGraw-Hill Companies. All rights reserved.
Any use is subject to the Terms of Use as given at the website.

UOP FLUID CATALYTIC CRACKING PROCESS

TABLE 3.3.5 Product Yield and Properties for Typical Modes of Operation

	Middle-distillate mode		Gasoline mode	Light olefin mode
	Full range	Undercut		
Product yields				
H_2S, wt %	0.7	0.7	1.0	1.0
C_2-, wt %	2.6	2.6	3.2	4.7
C_3, LV %	6.9	6.9	10.7	16.1
C_4, LV %	9.8	9.8	15.4	20.5
C_5+ gasoline, LV %	43.4	33.3	60.0	55.2
Light cycle oil, LV %	37.5	47.6	13.9	10.1
CO, LV %	7.6	7.6	9.2	7.0
Coke, wt %	4.9	4.9	5.0	6.4
Product properties				
LPG, vol/vol:				
C_3 olefin/saturate	3.4	3.4	3.2	3.6
C_4 olefin/saturate	1.6	1.6	1.8	2.1
Gasoline:				
ASTM 90% point, °C	193	132	193	193
ASTM 90% point, °F	380	270	380	380
RONC	90.5	91.3	93.2	94.8
MONC	78.8	79.3	80.4	82.1
Light cycle oil:				
ASTM 90% point, °C	354	354	316	316
ASTM 90% point, °F	670	670	600	600
Flash point, °C (°F)	97 (207)	55 (131)	97 (207)	97 (207)
Viscosity, cSt @ 50°C (122°F)	3.7	2.4	3.1	3.2
Sulfur, wt %	2.9	2.4	3.4	3.7
Cetane index	34.3	31.8	24.3	20.6
Clarified oil:				
Viscosity, cSt @ 100°C (210°F)	10.9	10.9	9.0	10.1
Sulfur, wt %	5.1	5.1	6.0	6.8

Note: ASTM = American Society for Testing and Materials; RONC = research octane number, clear; MONC = motor octane number, clear.

Source: Reprinted from D. A. Lomas, C. A. Cabrera, D. M. Cepla, C. L. Hemler, and L. L. Upson, "Controlled Catalytic Cracking," UOP 1990 Technology Converence.

FEEDSTOCK VARIABILITY

The early FCC units were designed primarily to operate on virgin VGOs. These feedstocks would be characterized as good cracking feedstocks. Today many refiners are faced with processing less favorable materials. In addition, refiners have been forced to convert more of the nondistillable portion of the barrel to remain competitive. Thus, a greater proportion of FCC feedstock has its origin in the bottom of the barrel. These components may be cracked stocks in the VGO boiling range, or they may be previously virgin nondistillables. Coker and visbreaker gas oils are commonly blended in FCC feed. The next source of heavy FCC feed has traditionally been a little vacuum tower residue blended into the feed in proportions consistent with the FCC coke-burning capabilities. Some refiners have cho-

Downloaded from Digital Engineering Library @ McGraw-Hill (www.digitalengineeringlibrary.com)
Copyright © 2004 The McGraw-Hill Companies. All rights reserved.
Any use is subject to the Terms of Use as given at the website.

UOP FLUID CATALYTIC CRACKING PROCESS

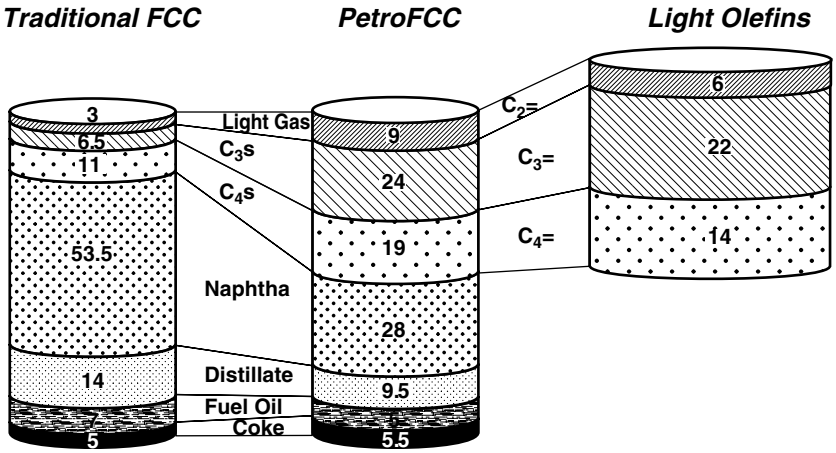

FIGURE 3.3.9 Typical PetroFCC yield, wt % (VGO feed).

sen to solvent-extract the vacuum residue to provide a nondistillable FCC feed component that has significantly less metal and asphaltene than the vacuum residue itself. Others have gone to the limit and charge certain whole atmospheric residues to their FCC units.

This section briefly discusses two significant FCC operations: the hydrotreating of FCC feeds for yield improvement and environmental concerns and the cracking of various solvent-extracted oils and whole residues.

FCC Feed Hydrotreating

Because the FCC feed can include a substantial amount of sulfur-containing materials, the products, including the flue gas, are typically rich in sulfur compounds. This situation in turn has led to specialized flue gas treating systems and scrubbers for external cleanup or to catalyst modifications and feed hydrotreating as internal process approaches for the reduction of sulfur levels. Of these approaches, only feed hydrotreating provides any significant processing improvement because the addition of hydrogen can dramatically increase the cracking potential of any given feed. This increase can be even more meaningful when the initial feed is poor in quality or when the feed is contaminated. Table 3.3.6 shows the results of hydrotreating poor-quality feed at two different levels of hydrogen addition. As feedstock quality declines and growing emphasis is placed on tighter sulfur regulations, feed hydrotreating will receive even more consideration.

Cracking of High-Boiling Feedstocks

Reference has been made to the cracking of high-boiling fractions of the crude. As refiners seek to extend the range of the feedstocks that are processed in FCC units, the most frequent sources of these heavier feeds are

- A deeper cut on a vacuum column
- The extract from solvent extraction of the vacuum tower bottoms
- The atmospheric residue itself

Downloaded from Digital Engineering Library @ McGraw-Hill (www.digitalengineeringlibrary.com)
Copyright © 2004 The McGraw-Hill Companies. All rights reserved.
Any use is subject to the Terms of Use as given at the website.

UOP FLUID CATALYTIC CRACKING PROCESS

TABLE 3.3.6 Hydrotreating of FCC Feedstock

	Untreated feed	Mildly desulfurized	Severely hydrotreated
Gravity, °API (specific gravity)	18.4 (0.944)	22.3 (0.920)	26.3 (0.897)
UOP K factor	11.28	11.48	11.67
Distillation D-1160, °C (°F):			
5%	275 (527)	266 (510)	249 (481)
50%	410 (770)	399 (750)	375 (707)
95%	498 (928)	497 (926)	467 (873)
Sulfur, wt %	1.30	0.21	0.04
Nitrogen, wt %	0.43	0.32	0.05
Hydrogen, wt %	11.42	12.07	12.74
Cracking performance at equivalent pilot-plant conditions:			
Conversion, LV %	59.0	66.1	82.5
Gasoline, LV %	41.1	46.0	55.6
Coke, wt %	8.8	6.1	5.6

Regardless of the source of these high-boiling components, a number of problems are typically encountered when these materials are processed in an FCC unit, although the magnitude of the problem can vary substantially:

- *Additional coke production.* Heavy feeds typically have high levels of contaminants, such as Conradson carbon levels. Because much of this material deposits on the catalyst with the normal coke being deposited by the cracking reactions, the overall coke production is substantially higher. Burning this coke requires additional regeneration air. In an existing unit, this coke-burning constraint often limits capacity.
- *Necessity for metal control.* Metals in the heavy feeds deposit almost quantitatively on the catalyst. These metals produce two significant effects. First, they accelerate certain metal-catalyzed dehydrogenation reactions, thereby contributing to light-gas (hydrogen) production and to the formation of additional coke. A second, more damaging effect is the situation in which the presence of the metal contributes to a catalyst activity decline caused partly by limited access to the catalyst's active sites. This latter effect is normally controlled by catalyst makeup practices (adding and withdrawing catalyst).
- *Distribution of sulfur and nitrogen.* The level of sulfur and nitrogen in the products, waste streams, and flue gas generally increases when high-boiling feeds are processed because these feed components typically have higher sulfur and nitrogen contents than their gas oil counterparts. In the case of nitrogen, however, the problem is not just one of higher nitrogen levels in the products. One portion of the feed nitrogen is basic in character, and the presence of this basic nitrogen acts as a temporary catalyst poison to reduce the useful activity of the catalyst.
- *Heat-balance considerations.* Heat-balance control may be the most immediate and troublesome aspect of processing high-boiling feeds. As the contaminant carbon increases, the first response is normally an increase in regenerator temperature. Adjustments in operating parameters can be made to assist in this control, but eventually, a point will be reached for heavier feeds when the regenerator temperature is too high for good catalytic performance. At this point, some external heat removal from the regenerator is required and would necessitate a mechanical modification like a catalyst cooler.

Downloaded from Digital Engineering Library @ McGraw-Hill (www.digitalengineeringlibrary.com)
Copyright © 2004 The McGraw-Hill Companies. All rights reserved.
Any use is subject to the Terms of Use as given at the website.

UOP FLUID CATALYTIC CRACKING PROCESS

Many of the UOP-licensed FCC units have a high-boiling feed component as a significant portion of the FCC charge. Interestingly, the product qualities from these operations are not much different from those for similar gas oil operations. In general, the octane levels of the gasoline remain good, the cycle oil qualities are similar, and the heavy fuel oil fraction has a low viscosity and a low metal content and still remains distillable.

Demetallized oil (DMO) from the solvent extraction of a vacuum-tower bottoms stream using a light paraffinic solvent and atmospheric residue have emerged as the two most widely used high-boiling feed components.

Atmospheric residue has ranged from a relatively low proportion of the total feed all the way to situations in which it represents the entire feed to the unit. To improve the handling of these high-boiling feeds, several units have been revamped to upgrade them from their original gas-oil designs. Some units have proceeded to increase the amount of residue in a stepwise fashion; modifications to the operating conditions and processing techniques are made as greater experience is gained in the processing of high-boiling feeds.

As expected, the properties of the high-boiling feedstocks currently being processed in units originally designed for gas-oil feeds vary across a wide range. Typical of some of this variation are the four feed blends described in Table 3.3.7. They range from clean, sweet residues to more contaminated residues with up to approximately 4 wt % Conradson carbon residue.

The interest in atmospheric residue processing has extended to new unit designs as well. Some examples of the feedstocks that have formed the basis for recent UOP-designed units with two-stage regenerators and dense-phase catalyst cooling are shown in Table 3.3.8. The higher carbon residues and metals levels have led to larger regenerators and additional catalyst makeup; but catalyst improvements have helped, too. One unit has operated with more than 15,000 ppm of nickel on the equilibrium catalyst. Even though such values are high, operating or economic limitations will still continue to dictate the characteristics of the feedstocks that will be processed.

PROCESS COSTS

The following section presents typical process costs for FCC units. These costs are included here for orientation purposes only; specific applications need to be evaluated individually.

Investment. The capital investment for the various sections of a new 60,000 BPSD FCC unit operating with a 5 wt % coke make is shown in Table 3.3.9. In general, costs for other capacities vary according to a ratio of the capacities raised to a power of about 0.6.

TABLE 3.3.7 Typical Residue Cracking Stocks

	A	B	C	D
Gravity, °API (specific gravity)	28.2 (0.886)	24.5 (0.907)	26.4 (0.896)	22.4 (0.919)
UOP K factor	12.1	11.75	12.1	11.95
Sulfur, wt %	0.98	1.58	0.35	0.77
Conradson carbon residue, wt %	1.01	1.25	2.47	3.95
Metals, wt ppm:				
Ni	0.2	1.6	0.7	2.8
V	0.8	2.3	0.5	3.5
Nondistillables at 565°C (1050°F), LV %	10	8	13	23

Downloaded from Digital Engineering Library @ McGraw-Hill (www.digitalengineeringlibrary.com)
Copyright © 2004 The McGraw-Hill Companies. All rights reserved.
Any use is subject to the Terms of Use as given at the website.

UOP FLUID CATALYTIC CRACKING PROCESS

TABLE 3.3.8 Residue Feedstocks for New Units

	A	B	C	D
Gravity, °API	22.4	19.2	18.8	21.2
Specific gravity	0.9194	0.9390	0.9415	0.9267
UOP K factor	12.3	11.83	12.0	11.94
Sulfur, wt %	0.1	0.5	0.74	0.45
Nitrogen, wt ppm	2300	1600	1900	1050
Conradson carbon, wt %	5.6	6.0	8.0	4.2
Metals, wt ppm				
Nickel	21	10	6.8	3.1
Vanadium	1	10	3.0	4.6

TABLE 3.3.9 Investment Costs

	Estimated erected cost,* million $
Reactor section	22.7
Regenerator section	50.0
Main column	27.8
Gas concentration section	35.8
	136.3

*Investment accurate within +40%, U.S. Gulf Coast erection, 2001.

Utilities. To gain an insight into the operating costs for a typical FCC unit, a utilities and catalyst usage summary is presented in Table 3.3.10. The utilities balance assumes an electrically driven main air blower with a steam-driven gas compressor. For large units, a power recovery turbine is often used to recover the available energy from the pressurized flowing flue gas. This has an obvious impact on the unit's utilities balance since the power recovery turbine can typically supply more than enough energy to run the main air blower.

MARKET SITUATION

The FCC process is one of the most widely employed refining processes. More than 500 FCC units have been built worldwide since the process was first commercialized, and more than 400 are still operating. A breakdown of the world's operating FCC capacity data for 2001 is listed in Table 3.3.11.

When there is a high demand for gasoline, as in North America, the FCC charge capacity can be about one-third that of the crude capacity. This ratio can go even higher when a portion of the vacuum residue finds its way into additional FCC feedstock.

The FCC process will clearly be the conversion process of choice in future situations where gasoline rather than middle distillate is the desired product. Because the FCC unit has such a dominant place in the refinery flow scheme, it is only natural that the FCC unit would be asked to play a major role in producing tomorrow's clean fuels. So efforts to control the sulfur level and composition of the FCC gasoline are receiving major attention.

Future applications where the emphasis would switch from transportation fuels to producing individual compounds and petrochemicals would also place the FCC unit in a

Downloaded from Digital Engineering Library @ McGraw-Hill (www.digitalengineeringlibrary.com)
Copyright © 2004 The McGraw-Hill Companies. All rights reserved.
Any use is subject to the Terms of Use as given at the website.

UOP FLUID CATALYTIC CRACKING PROCESS

TABLE 3.3.10 Typical Utilities and Catalyst Usage

Utilities	
Electricity, kWh/bbl FF	−8.8
Steam, lb/bbl FF	
High-pressure (600 lb/in^2 gage)	34.4
Medium-pressure (150 lb/in^2 gage)	−45.1
Low-pressure (50 lb/in^2 gage)	8.0
Treated water, lb/bbl FF	−73.5
Cooling water, gal/bbl FF	−270
FCC catalyst, lb/bbl FF	−0.16

Note: bbl FF = barrels of fresh feed. Negative values are consumption, positive values are production.

TABLE 3.3.11 Worldwide Capacity

	Crude capacity, million BPCD	FCC capacity, million BPCD
North America	20.0	6.5
Asia	20.2	2.7
Western Europe	14.5	2.1
Eastern Europe	10.7	0.8
South America	6.5	1.2
Middle East	6.1	0.3
Africa	3.2	0.2
Sum	81.2	13.8

BPCD = barrels per calendar day.
Source: *Oil and Gas Journal,* Dec. 24, 2001.

favored position. The FCC process will continue to play a major role and have a bright future.

REFERENCES

1. M. W. Schnaith, A. T. Gilbert, D. A. Lomas, and D. N. Myers, "Advances in FCC Reactor Technology," Paper AM-95-36, NPRA Annual Meeting, San Francisco, Mar. 19–21, 1995.
2. C. L. Hemler and A. G. Shaffer, Jr., "The Keys to RCC Unit Success," AIChE Spring National Meeting, Houston, Tex., Apr. 7–11, 1991.
3. D. A. Kauff, and B. W. Hedrick, "FCC Process Technology for the 1990's," Paper AM-92-06, NPRA Annual Meeting, New Orleans, La., Mar. 22–24, 1992.
4. P. B. Venuto and E. T. Habib, "Catalyst-Feedstock-Engineering Interactions in Fluid Catalytic Cracking," *Catalysis Reviews: Science and Engineering*, **18**(11), 1–150 (1978).
5. J. M. Houdek, C. L. Hemler, R. M. Pittman, and L. L. Upson, "Developing a Process for the New Century," *Petroleum Technology Quarterly,* Spring 2001.

Downloaded from Digital Engineering Library @ McGraw-Hill (www.digitalengineeringlibrary.com)
Copyright © 2004 The McGraw-Hill Companies. All rights reserved.
Any use is subject to the Terms of Use as given at the website.

Downloaded from Digital Engineering Library @ McGraw-Hill (www.digitalengineeringlibrary.com)
Copyright © 2004 The McGraw-Hill Companies. All rights reserved.
Any use is subject to the Terms of Use as given at the website.

Source: HANDBOOK OF PETROLEUM REFINING PROCESSES

CHAPTER 3.4

STONE & WEBSTER–INSTITUT FRANÇAIS DU PÉTROLE FLUID RFCC PROCESS

Warren S. Letzsch
FCC Program Manager
Stone & Webster Inc.
Houston, Texas

HISTORY

Stone & Webster (S&W), in association with Institut Français du Pétrole (IFP), is the licenser of the S&W-IFP residual fluid catalytic cracking (R2R) process. The original S&W-IFP R2R (reactor 2 regenerators) process was developed during the early 1980s by Total Petroleum Inc. at its Arkansas City, Kansas, and Ardmore, Oklahoma, refineries. Because the development of this process saw heavy input from an operating company, unit operability and mechanical durability were incorporated into the design to ensure smooth operation and long run lengths. To process the heavy, viscous residual feedstocks, which can contain metals in high concentrations and produce relatively high amounts of coke, the design incorporates an advanced feed injection system, a unique regeneration strategy, and a catalyst transfer system which produces extremely stable catalyst circulation. Recent technology advances have been made in the areas of riser termination, reactant vapor quench, mix temperature control (MTC), and stripping.

Today 26 full-technology S&W-IFP RFCC units have been licensed worldwide (revamp and grassroots), more than all other RFCC licensers combined. Within the Pacific Rim, S&W-IFP's 19 licensed units outnumber the competition by more than 2 to 1. From 1980 to 2001, there were 20 operating S&W-IFP FCC units totaling more than 190 years of commercial operation. A licensed R2R, located in Japan, is shown in Fig. 3.4.1. A listing of all S&W-IFP (full-technology) licensed R2R units is shown in Table 3.4.1.

While the conception of this technology was based on processing residual feed, the technology has been proved and is widely accepted for processing lighter gas oil feedstocks. Stone & Webster and IFP have ample experience revamping gas oil FCC units to upgrade the feed injection system, combustion air distributor, riser termination device, etc. At present, more than 60 FCC units are processing over 2,400,000 barrels per day (BPD) of FCC feed employing the S&W-IFP feed injection technology. In fact, S&W-IFP systems have replaced feed injection systems of virtually every competing licenser and have always provided measurable benefits.

Downloaded from Digital Engineering Library @ McGraw-Hill (www.digitalengineeringlibrary.com)
Copyright © 2004 The McGraw-Hill Companies. All rights reserved.
Any use is subject to the Terms of Use as given at the website.

STONE & WEBSTER–INSTITUT FRANÇAIS DU PÉTROLE FLUID RFCC PROCESS

FIGURE 3.4.1 SWI-IFP RFCC unit located in Japan. Photograph shows second- and first-stage regenerators and main fractionator. Note the external cyclones on the second-stage regenerator.

PROCESS DESCRIPTION

R2R Converter

Two configurations of the grassroots R2R unit are offered. The first, and the most common, is the stacked regenerator version shown in Fig. 3.4.2, which minimizes plot space.

Downloaded from Digital Engineering Library @ McGraw-Hill (www.digitalengineeringlibrary.com)
Copyright © 2004 The McGraw-Hill Companies. All rights reserved.
Any use is subject to the Terms of Use as given at the website.

STONE & WEBSTER–INSTITUT FRANÇAIS DU PÉTROLE FLUID RFCC PROCESS

TABLE 3.4.1 S&W-IFP Full RFCC Technology Units

Refinery	Location	Capacity, BPSD	Start-up
A	Kansas	20,000	1981
B	Oklahoma	25,000/40,000*	1982
C	Canada	19,000	1985
D	Japan	40,000	1987
E	Australia	25,000	1987
F	Canada	25,000	1987
G	China	23,000	1987
H	China	21,000	1989
I	China	28,000	1990
J	China	21,000	1990
K	China	21,000	1991
L	Japan	30,000	1992
M	Japan	31,600	1994
N	Uruguay	9,000	1994
O	Singapore	24,000	1995
P	Korea	50,000	1995
Q	Korea	30,000	1995
R	Thailand	37,000	1996
S	India	15,000	1997
T	Canada	65,000	2000
U	India	15,000	2001
V	India	26,000	2002
W	India	60,000	2003
X	India	65,000	2003
Y	Europe	30,000	2004
Z	Vietnam	65,000	2004

*Design capacity was 40,000 BPSD. Currently operating at 25,000 BPSD.

Note: BPSD = barrels per stream-day.

The second is side-by-side regenerator design configuration, which is discussed in "FCC Revamp to RFCC" below and is more typical of FCC units which have been revamped to RFCC or for units larger than 100,000 B/D.

The process flow will be presented by using the stacked version shown in Fig. 3.4.2. The RFCC utilizes a riser-reactor, catalyst stripper, first-stage regeneration vessel, second-stage regeneration vessel, catalyst withdrawal well, and catalyst transfer lines. Process flow for the side-by-side configuration is identical except for the catalyst transfer between the first- and second-stage regenerators.

Fresh feed is finely atomized with dispersion steam and injected into the riser through the feed injection nozzles over a dense catalyst phase. The small droplets of feed contact the freshly regenerated catalyst and instantaneously vaporize. The oil molecules intimately mix with the catalyst particles and crack into lighter, more valuable products.

Mix temperature control nozzles inject a selected recycle stream which quenches the catalyst and feed vapor. This feature allows control of the critical feed-catalyst mix zone temperature independent of the riser outlet temperature and provides some cooling of the regenerator. Riser outlet temperature (ROT) is controlled by the regenerated catalyst slide valve.

As the reaction mixture travels up the riser, the catalyst, steam, and hydrocarbon product mixture pass through a riser termination device. S&W-IFP currently offers a number

Downloaded from Digital Engineering Library @ McGraw-Hill (www.digitalengineeringlibrary.com)
Copyright © 2004 The McGraw-Hill Companies. All rights reserved.
Any use is subject to the Terms of Use as given at the website.

STONE & WEBSTER–INSTITUT FRANÇAIS DU PÉTROLE FLUID RFCC PROCESS

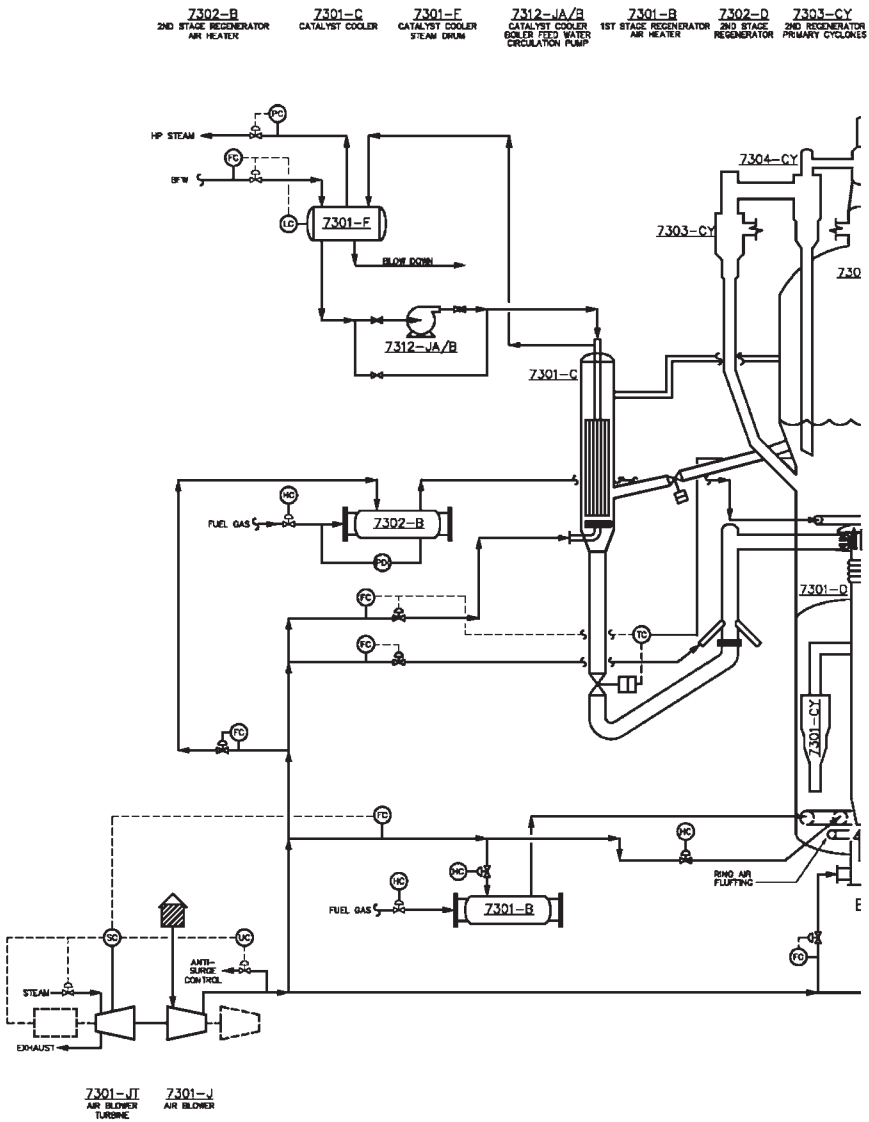

FIGURE 3.4.2 S&W IFP RFCC unit process flow diagram.

Downloaded from Digital Engineering Library @ McGraw-Hill (www.digitalengineeringlibrary.com)
Copyright © 2004 The McGraw-Hill Companies. All rights reserved.
Any use is subject to the Terms of Use as given at the website.

STONE & WEBSTER–INSTITUT FRANÇAIS DU PÉTROLE FLUID RFCC PROCESS

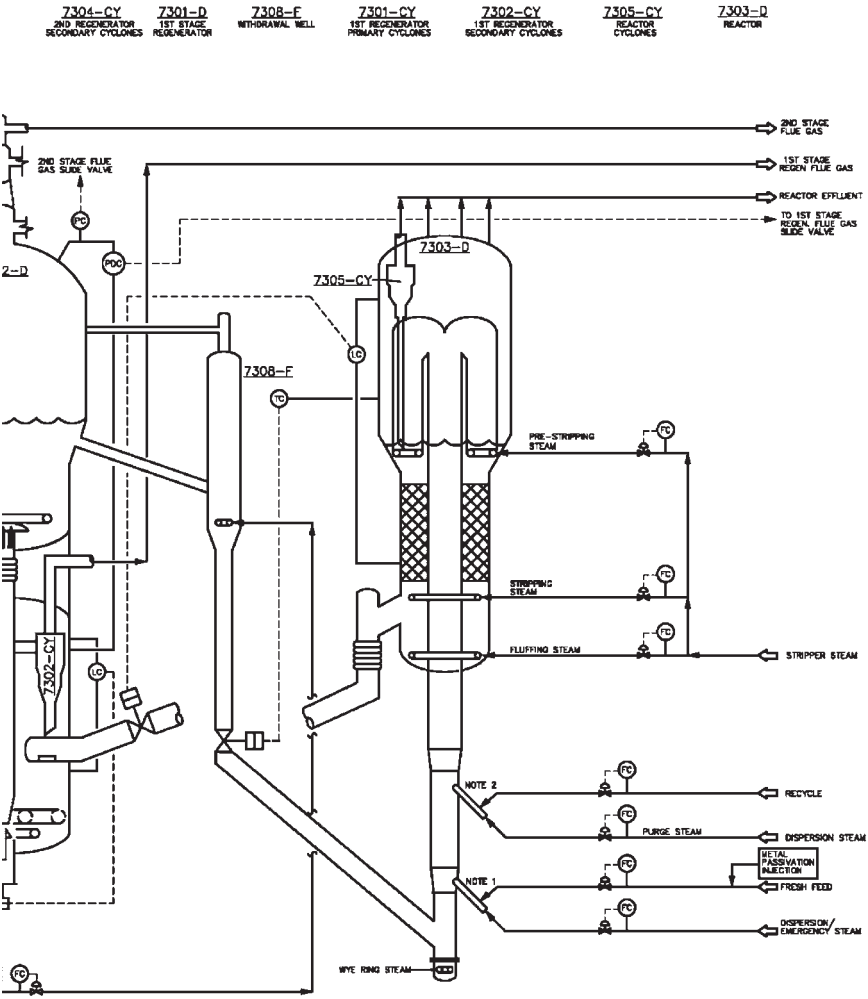

Downloaded from Digital Engineering Library @ McGraw-Hill (www.digitalengineeringlibrary.com)
Copyright © 2004 The McGraw-Hill Companies. All rights reserved.
Any use is subject to the Terms of Use as given at the website.

STONE & WEBSTER–INSTITUT FRANÇAIS DU PÉTROLE FLUID RFCC PROCESS

of patented technologies for this service. These include rough-cut cyclones with extended outlet tubes, a linear disengaging device (LD^2), a reactor separator stripper (RS^2), and close-coupled cyclones. These devices quickly disengage the catalyst from the steam and product vapors. Reactant vapors may be quenched after the initial catalyst-vapor separation, minimizing thermal product degradation reactions. Reactant vapors are then ducted to the top of the reactor near the reactor cyclone inlets, while catalyst is discharged into the stripper through a pair of catalyst diplegs.

This ducting minimizes the vapor residence time and undesirable secondary thermal reactions in the vessel. The vapors and entrained catalyst pass through single-stage high-efficiency cyclones. Reactor products, inerts, steam, and a minute amount of catalyst flow into the base of the main fractionator and are separated into various product streams.

Below each dipleg of the primary separator, a steam ring can be added to ensure smooth catalyst flow out of the bottom. The stripper portion of this vessel can utilize four baffled stages or contain a proprietary packing material. Steam from the main steam ring fluidizes the catalyst bed, displaces the entrained hydrocarbons, and strips the adsorbed hydrocarbons from the catalyst before it enters the regeneration system. A steam fluffing ring, located in the bottom head of the stripper, keeps the catalyst properly fluidized and ensures smooth catalyst flow through the spent catalyst transfer line.

Stripped catalyst leaves the stripper through the 45° slanted withdrawal nozzle and then enters a vertical standpipe. The spent catalyst flows down through this standpipe and into a second 45° lateral section that extends into the first-stage regenerator. The spent catalyst slide valve is located near the top of this lower 45° transfer line and controls the catalyst bed level in the stripper. Careful aeration of the catalyst standpipe ensures proper head buildup and smooth catalyst flow. The flow rates from the aeration taps are adjustable to maintain stable standpipe density for different catalyst circulation rates or different catalyst types. The catalyst enters the first-stage regenerator through a catalyst distributor which disperses the catalyst onto and across the bed surface.

Catalyst and combustion air flow countercurrently within first-stage regenerator vessel. Combustion air is distributed into the regenerator vessel by air rings. These air rings provide even air distribution across the bed, resulting in proper fluidization and combustion. A pipe grid can be used as well. Partially regenerated catalyst exits near the bottom of the vessel through a hollow stem plug valve which controls the first-stage regenerator bed level. A lift line conveys the partially regenerated catalyst from the first-stage regenerator to the second stage, utilizing air injected into the line through the hollow stem of the plug valve. Carbon monoxide–rich flue gases exit the regenerator through two-stage high-efficiency cyclones.

The operational severity of the first-stage regeneration is intentionally mild due to partial combustion. Low temperature results in the catalyst maintaining higher surface area and activity levels. The coke burn percentage can be varied by shifting the burn to the second-stage regenerator, giving the RFCC the operating flexibility for residual as well as gas oil feedstocks. For residual feed, nearly 70 percent of the coke is burned in the first-stage regenerator while approximately 50 percent is burned during gas oil operation. Essentially all the hydrogen on the coke is burned off the coke in the first-stage regenerator; this step, coupled with low regenerator temperature, minimizes hydrothermal deactivation of the catalyst.

As the catalyst enters the second-stage regeneration vessel, below the combustion air ring, a mushroom grid distributes the catalyst evenly across the bottom head. This grid distributor on the top of the lift line ensures proper distribution of air and catalyst. In the second-stage regenerator, the remaining carbon on the catalyst is completely burned off with excess oxygen, resulting in a higher temperature compared to the first-stage regenerator. An air ring in this regenerator distributes a portion of the combustion air, while the lift air provides the remainder of the air. With most of the hydrogen burned in the first stage,

Downloaded from Digital Engineering Library @ McGraw-Hill (www.digitalengineeringlibrary.com)
Copyright © 2004 The McGraw-Hill Companies. All rights reserved.
Any use is subject to the Terms of Use as given at the website.

STONE & WEBSTER–INSTITUT FRANÇAIS DU PÉTROLE FLUID RFCC PROCESS

moisture content in the gases in the second-stage regenerator is low. This allows higher temperatures in the second-stage regenerator without causing excessive hydrothermal catalyst deactivation.

The second-stage regenerator vessel has minimum internals, which increases the metallurgical temperature limitations. Flue gas leaving the regenerator passes through two-stage external cyclones for catalyst removal. The recovered catalyst is returned to the regenerator via diplegs, and the flue gas flows to the energy recovery section.

If the feed Conradson carbon residue is greater than 7.0 wt %, a catalyst cooler will be required for the second-stage regenerator (shown as optional in Fig. 3.4.2) to reduce the second-stage regenerator temperature to less than 760°C. A dense-phase catalyst cooler will withdraw catalyst and return it, via an air lift riser, to just beneath the combustion air ring. Heat is recovered from the catalyst by generating saturated high-pressure steam. Large adjustments in the catalyst cooler duty can be made by varying the catalyst circulation rate through the catalyst cooler. Fine catalyst cooler duty corrections can be made by adjusting the fluidization air rate in the cooler. Internal cyclones can be used in the second regeneration, in this case due to the 760°C maximum temperature limit.

Hot regenerated catalyst flows into a withdrawal well from the second-stage regenerator. The withdrawal well allows the catalyst to deaerate properly to standpipe density before entering the vertical regenerated catalyst standpipe. This design ensures smooth and even catalyst flow down the standpipe. Aeration taps, located stepwise down the standpipe, serve to reaerate the catalyst and replace gas volume lost by compression. Flow rates for the aeration taps are adjustable to maintain desirable standpipe density, allowing for differences in catalyst circulation rates or catalyst types. The catalyst passes through the regenerated catalyst slide valve, which controls the reactor temperature by regulating the amount of hot regenerated catalyst to the reactor. The catalyst then flows down the 45° slanted wye section to the riser base. Fluidization in the wye section ensures stable and smooth dense-phase catalyst flow to the feed injection zone. A straight vertical section below the feed nozzles stabilizes the catalyst flow before feed injection and serves as a reverse seal, preventing oil flow reversal.

Flue Gas Handling

Each RFCC flue gas system is generally unique from one unit to the next because of local environmental requirements and refiner preference. An example of a basic flue gas handling system is shown in Fig. 3.4.3. The flue gas line from the second regenerator will have a flue gas slide valve and orifice chamber. The first-stage regenerator flue gas slide valve (FGSV) controls the pressure differential between the two regenerator vessels, while the second-stage regenerator FGSV directly controls the pressure of the second-stage regenerator.

Large-capacity RFCC units may employ a power recovery train and tertiary cyclone system on the first-stage regenerator flue gas stream to drive the air blower. Depending on local particulate emission requirements, an electrostatic precipitator (ESP) or other particulate recovery device such as a third-stage cyclone system or flue gas scrubber may be used to recover entrained particulates. Here a flue gas scrubber is included. More stringent SO_x and NO_x emission requirements may necessitate a flue gas scrubber, SO_x capturing catalyst additive, or similar process for SO_x recovery and/or a selective catalytic reduction (SCR) unit for NO_x mitigation.

A CO incinerator is located just downstream of the first-stage regenerator power recovery equipment and oxidizes all CO gases to CO_2, utilizing fuel gas and combustion air. Exit temperature is typically 980°C with 1 percent excess O_2. Gases from the CO incinerator combine with second-stage regenerator flue gases and enter a flue gas cooler, where heat

Downloaded from Digital Engineering Library @ McGraw-Hill (www.digitalengineeringlibrary.com)
Copyright © 2004 The McGraw-Hill Companies. All rights reserved.
Any use is subject to the Terms of Use as given at the website.

STONE & WEBSTER–INSTITUT FRANÇAIS DU PÉTROLE FLUID RFCC PROCESS

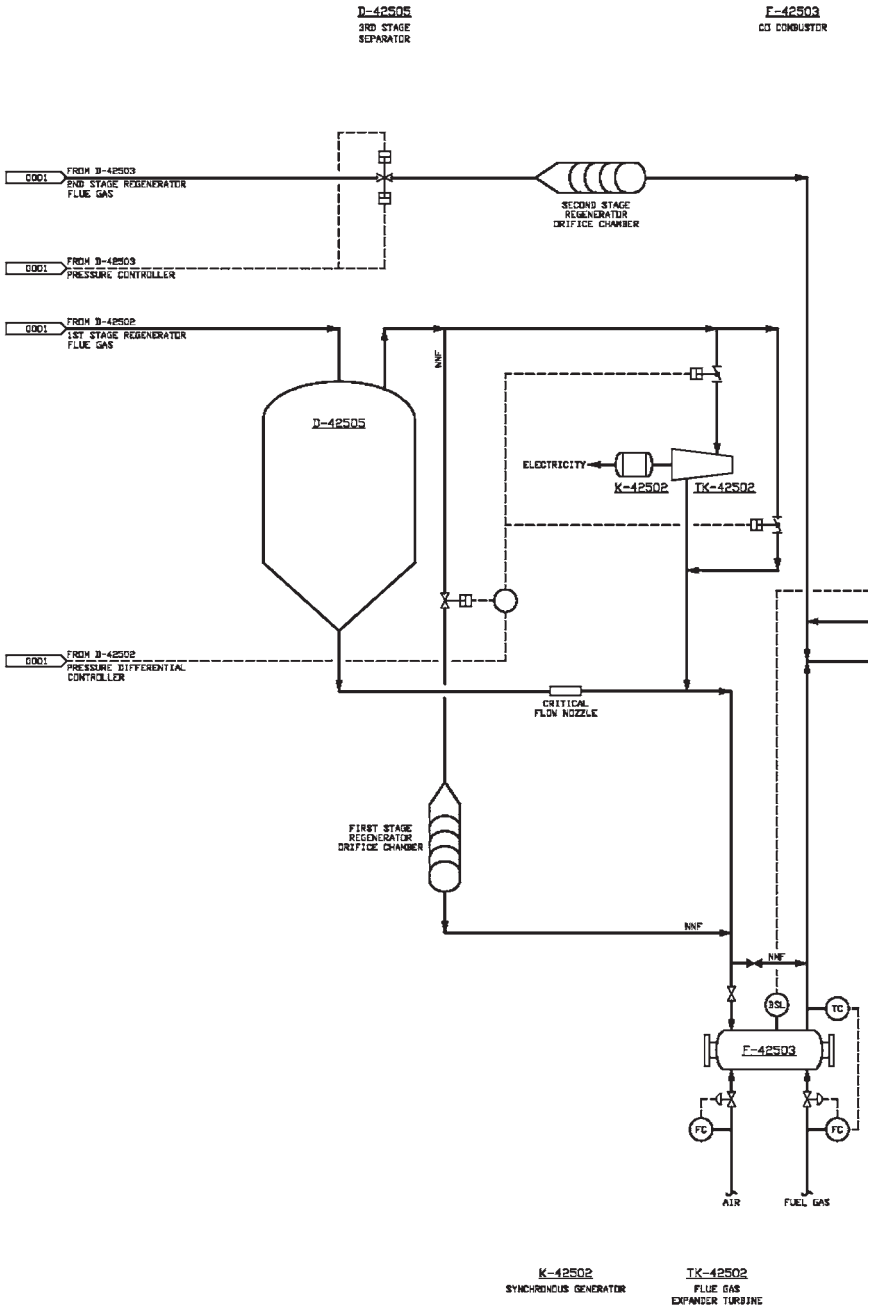

FIGURE 3.4.3 Flue gas handling process flow diagram.

Downloaded from Digital Engineering Library @ McGraw-Hill (www.digitalengineeringlibrary.com)
Copyright © 2004 The McGraw-Hill Companies. All rights reserved.
Any use is subject to the Terms of Use as given at the website.

STONE & WEBSTER–INSTITUT FRANÇAIS DU PÉTROLE FLUID RFCC PROCESS

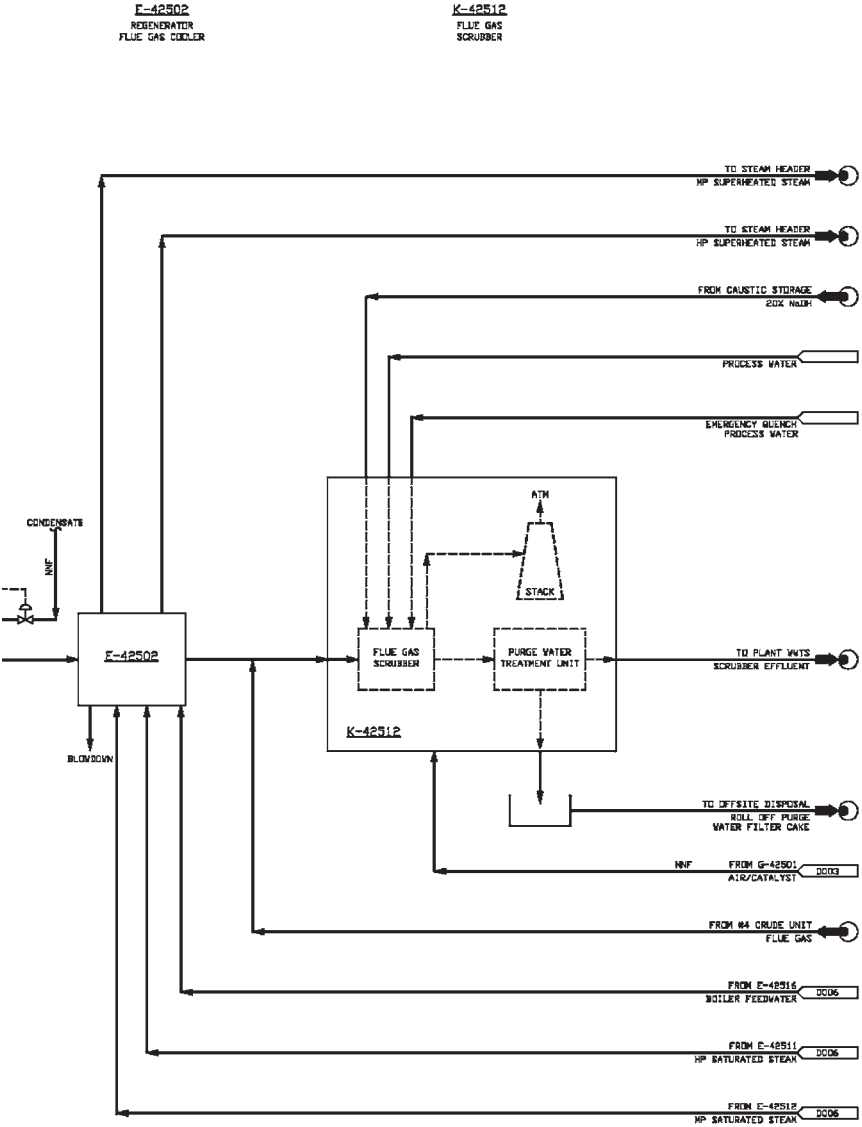

Downloaded from Digital Engineering Library @ McGraw-Hill (www.digitalengineeringlibrary.com)
Copyright © 2004 The McGraw-Hill Companies. All rights reserved.
Any use is subject to the Terms of Use as given at the website.

STONE & WEBSTER–INSTITUT FRANÇAIS DU PÉTROLE FLUID RFCC PROCESS

is recovered as high-pressure superheated steam. After going through the wet scrubber, the flue gases are finally dispersed into the atmosphere through a stack.

Catalyst Handling

The RFCC catalyst handling system has three separate and unique functions:

- Spent catalyst storage and withdrawal
- Fresh catalyst storage and addition
- Equilibrium catalyst storage and addition

The spent hopper receives hot catalyst intermittently from the second-stage regenerator to maintain proper catalyst inventory during operation. In addition, the spent catalyst hopper is used to unload, store, and then refill the entire catalyst inventory during R2R shutdowns.

The fresh catalyst hopper provides storage of catalyst for daily makeup. A loader, located just beneath the hopper, loads fresh catalyst from the hopper to the first-stage regenerator. Fresh catalyst makeup is based on maintaining optimal unit catalyst activity and should be on a continuous basis.

Unique to R2R designs is a third hopper which is used for equilibrium catalyst. Like the fresh catalyst hopper, the equilibrium catalyst hopper provides storage of catalyst for daily makeup. Equilibrium catalyst serves to flush metals from the unit equilibrium catalyst in processing of residual feeds with high metal content. However, equilibrium catalyst usually does not contribute much to cracking activity.[1] As a result, the equilibrium catalyst addition rate is based on targeted metal content on unit equilibrium catalyst, while the fresh catalyst makeup rate is based on maintaining unit catalyst activity. An equilibrium catalyst loader is located just beneath the hopper which supplies equilibrium catalyst to the first-stage regenerator. It is critical that the equilibrium catalyst be compatible with residual operations and usually should not be more than one-third of the total catalyst makeup.

RFCC FEEDSTOCKS

The most significant advantage of the S&W-IFP R2R process is the flexibility to process a wide range of feedstocks. Table 3.4.2 lists the range of feedstock properties which have been successfully processed in the S&W-IFP R2R.

Feedstock to the R2R can take a variety of forms, from a hydrotreated vacuum gas oil (VGO) to a virgin highly aromatic atmospheric tower bottoms (ATB) such as Arabian Light ATB. The R2R feedstock can also be a blend of various unit streams such as a VGO plus coker vacuum gas oil, vacuum tower bottoms (VTB), deasphalted oil (DAO), slop wax, or lube extract. In fact, the number of possible feed constituents to the R2R is quite large since almost any hydrocarbon stream can be considered as a potential R2R feed.

What gives the R2R unit the flexibility to process this wide range of feedstocks is primarily the two-stage regenerator design and the minimization of delta coke inherent in the feed injection, catalyst-vapor separator, and stripper designs. A common index which indicates a feedstock's tendency to produce feed-derived coke is the *Conradson carbon residue* (CCR). As the residual content of a feedstock increases, so does the CCR amount. Table 3.4.3 compares the maximum CCR levels that can be processed in a two-stage regenerator and in a single-stage regenerator.

Recently the increasing need to convert the bottom of the barrel into clean transportation fuels (low-sulfur) coupled with the decreasing availability of sweet crudes has ignit-

Downloaded from Digital Engineering Library @ McGraw-Hill (www.digitalengineeringlibrary.com)
Copyright © 2004 The McGraw-Hill Companies. All rights reserved.
Any use is subject to the Terms of Use as given at the website.

STONE & WEBSTER–INSTITUT FRANÇAIS DU PÉTROLE FLUID RFCC PROCESS

TABLE 3.4.2 Commercial RFCC Feedstock Operation Experience

Property	Range
Gravity, °API	18–29
Conradson carbon residue, wt %	0–9
Sulfur, wt %	0.1–2.4
Nitrogen, wt %	0.05–0.35
Metals (Ni + V), wt ppm	0–50
540°C + components, LV %	0–58

Note: °API = degrees on the American Petroleum Institute scale; LV = liquid volume.

TABLE 3.4.3 Heavy-Feed Processing Capabilities of Various Heat Rejection Systems

System	Conradson carbon residue, wt %
Single-stage regenerator	
Full combustion	2.5
Partial combustion	3.5
Partial combustion + MTC	4.0
Catalyst cooler*	10.0
Two-stage regenerator	
Alone	6.0
With MTC	7.0
Catalyst cooler*	10.0

*Economic rather than technical limit.

ed an interest in hydrodesulfurization and residual hydrodesulfurization (RDS). Reynolds, Brown, and Silverman showed that it is economically feasible to upgrade VTB using a vacuum RDS (VRDS) process into feedstock for the S&W-IFP R2R unit.[2] Processing 100 percent VTB in the RFCC is considerably more attractive than processing it in traditional thermal processors such as delayed and fluid cokers since catalyst yields are superior to thermally derived products.

Operating Conditions

Like traditional FCC units, the S&W-IFP R2R unit can be operated in maximum distillate, maximum gasoline, or maximum olefin operational modes. Conversion is decreased for maximum distillate operations and increased for the maximum olefin operations by adjusting the riser outlet temperature and catalyst activity. Typical range of ROTs required for the three operation modes are as follows: maximum distillate, 510°C ROT minimum; maximum gasoline, 510 to 530°C ROT; and maximum olefins, 530 to 560°C ROT. For maximum distillate operation, MTC, discussed in "Mix Temperature Control" below, is critical in order to maintain the required mix temperature to ensure vaporization of the heavy residual feed at lower riser outlet temperatures. Likewise, reactant vapor quench technology,

Downloaded from Digital Engineering Library @ McGraw-Hill (www.digitalengineeringlibrary.com)
Copyright © 2004 The McGraw-Hill Companies. All rights reserved.
Any use is subject to the Terms of Use as given at the website.

STONE & WEBSTER–INSTITUT FRANÇAIS DU PÉTROLE FLUID RFCC PROCESS

discussed in "BP Product Vapor Quench" below, is especially critical during maximum olefin operations to reduce postriser thermal cracking at the elevated reactor temperatures.

Other typical operating conditions of the R2R unit are shown in Table 3.4.4. Examples of observed commercial product yields from S&W-IFP R2R units are shown in Table 3.4.5.

RFCC CATALYST

Catalyst Type

A successful residual cracking operation depends not only on the mechanical design of the converter but also on the catalyst selection. To maximize the amount of residual content in the RFCC feed, a low-delta-coke catalyst must be employed. *Delta coke* is defined as

$$\text{Delta coke} = \text{wt \% carbon on spent catalyst} - \text{wt \% CRC}$$

where CRC = carbon on regenerated catalyst, or as

$$\text{Delta coke} = \frac{\text{coke wt \% feed}}{\text{catalyst/oil ratio}}$$

Delta coke is a very popular index and, when increased, can cause significant rises in regenerator temperature, ultimately reducing the amount of residual feed that can be processed. Commercial delta coke consists of the following components:

TABLE 3.4.4 Typical RFCC Operating Conditions

Reactor	
Pressure, kg/cm^2 gage	1.1–2.1
Temperature, °C	510–550
MTC recycle, vol % feed	10–25
Feed dispersion steam, wt % feed	2.5–7.0
Stripping steam, kg/1000 kg	2.0–5.0
First-stage regenerator	
Pressure, kg/cm^2 gage	1.4–2.5
Temperature, °C	620–690
CO/CO_2	0.3–1.0
O_2, vol %	0.2
Coke, burn, wt %	50–70
Second-stage regenerator	
Pressure, kg/cm^2 gage	0.7–1.4*
Temperature, °C	675–760
O_2, vol %	2.0
Coke burn, wt %	30–50

*Second-stage regenerator pressures reflect a stacked regenerator configuration. For side-by-side regenerator configurations, the second-stage regenerator pressure would be similar to the first-stage regenerator pressure.

Downloaded from Digital Engineering Library @ McGraw-Hill (www.digitalengineeringlibrary.com)
Copyright © 2004 The McGraw-Hill Companies. All rights reserved.
Any use is subject to the Terms of Use as given at the website.

STONE & WEBSTER–INSTITUT FRANÇAIS DU PÉTROLE FLUID RFCC PROCESS

TABLE 3.4.5 Commercial RFCC Product Yields

	Unit (year)	
	A (1987)	B (1993)
Feed properties:		
540°C + components, LV %	36	58
CCR, wt %	5.9	4.9
Gravity, °API	22.3	25.1
Yield (LV %):		
Dry gas, wt %	4.3	3.2
C_3-C_4	24.9	30.5
Gasoline	60.2	61.5
Light cycle oil	17.5	14.0
Slurry	6.6	4.9
Coke, wt %	7.8	8.0
Conversion	75.9	81.1

- Catalytic coke (deposited slowly as a result of the catalytic reaction)
- Feed-derived coke (deposited quickly and dependent on feed CCR)
- Occluded coke (entrained hydrocarbons)
- Contaminant coke (coke produced as a result of metal contaminants)

Because the feed-derived coke becomes a large contributor to the overall delta coke in processing residual feeds, it is crucial that the overall delta coke be minimized in a residual FCC operation.

Stone & Webster-IFP typically recommends a catalyst with the following properties, which characterize it as a low-delta-coke catalyst:

- Low rare-earth ultrastable Y (USY) zeolite
- Equilibrium microactivity test (MAT) activity 60 to 65
- Low-delta-coke matrix

At high metal loadings the operator may also consider catalyst with vanadium traps and/or nickel passivators.

Catalyst Addition

Virgin residual feeds may contain large amounts of metals, which ultimately are deposited on the catalyst. Because of the mild two-stage regenerators, the catalyst metal content can be allowed to approach 10,000 wt ppm (Ni + V) before product yields are significantly affected. For an RFCC operation, catalyst addition is based on maintaining catalyst activity as well as metals on catalyst as opposed to maintaining only activity for typical FCC gas oil operations. The most economical way to maintain both activity and metals is to add both fresh catalyst and purchased equilibrium catalyst. Equilibrium catalyst is an effective metal-flushing agent; however, equilibrium catalyst does not contribute much cracking activity.[1] As a result, equilibrium catalyst is added with fresh catalyst in order to economically control both the unit catalyst activity and metal content. Care must be taken that the equilibrium catalyst chosen is compatible with residual operations and should not be more than one-third of the total catalyst additions.

Downloaded from Digital Engineering Library @ McGraw-Hill (www.digitalengineeringlibrary.com)
Copyright © 2004 The McGraw-Hill Companies. All rights reserved.
Any use is subject to the Terms of Use as given at the website.

STONE & WEBSTER–INSTITUT FRANÇAIS DU PÉTROLE FLUID RFCC PROCESS

TWO-STAGE REGENERATION

In the S&W-IFP two-stage regeneration process, the catalyst is regenerated in two steps: 50 to 70 percent in the first-stage regenerator and the balance in the second-stage regenerator. The first-stage regeneration is controlled by operating the first stage in an oxygen-deficient environment, producing significant amounts of carbon monoxide. Since the heat of combustion of carbon to carbon monoxide is less than one-third of that for combustion to carbon dioxide, much less heat is transferred to the catalyst than in a single-stage full-combustion regenerator. For example, a 30,000 BPSD R2R unit with a feed gravity of 22.5° API and a coke yield of 7.5 wt % at 66 percent coke burn in the first-stage regenerator has reduced the heat transferred to the catalyst by approximately 25×10^6 kcal/h over a full-burn single-stage regenerator.

The remaining carbon on the catalyst is burned in the second-stage regenerator in full-combustion mode. Because of the possible elevated temperature, external cyclones are employed to minimize regenerator internals and allow carbon-steel construction.

Comparison of Two-Stage and Single-Stage Regeneration with a Catalyst Cooler

Although both systems operate to control regenerator temperatures, the principles of operation are significantly different. The advantages of the two-stage regeneration system become apparent as the feed becomes heavier and/or its metal content increases. The benefits of a two-stage regeneration system over a single-stage system with a catalyst cooler are briefly described as follows.

Lower Catalyst Particle Temperature. A catalyst cooler removes heat after it is produced inside the regenerator, while less heat is produced in the regenerator with a two-stage regenerator design. This results in a lower catalyst particle temperature during combustion, reducing overall catalyst deactivation. Since the combustion is occurring in two steps, the combustion severity of each step is low. In the first-stage regenerator, the catalyst enters the bed from the top through the spent catalyst distributor while the combustion air enters the bed at the bottom of the vessel. This countercurrent movement of catalyst and air prevents the contacting of spent catalyst (high carbon) with fresh air containing 21 percent oxygen. All these factors result in lower catalyst thermal deactivation for the two-stage regeneration system.

Lower Hydrothermal Deactivation. While the catalyst is only partially regenerated in the first stage, most of the water formed by the combustion of the hydrogen in the coke is removed in this vessel. Figure 3.4.4 shows the percentage of hydrogen on coke burn as a function of carbon burn. Since the temperature of the first-stage regenerator is low, catalyst hydrothermal deactivation is significantly reduced. In the second-stage regenerator, where the bed temperature is high, moisture is minimal and does not pose a significant hydrothermal deactivation risk for the catalyst.

Better Metal Resistance. When refiners run high-metal feeds, it is very advantageous to be able to run with high metal levels on the equilibrium catalyst. Studies have clearly shown that high metal levels (particularly vanadium) lead to excessive catalyst deactivation in the presence of steam and oxygen. Since most of the steam in a regenerator comes from the hydrogen in the coke, the moisture content can be calculated in a straightforward manner. For a single-stage regenerator this will usually be more than 10 percent moisture. When steam and vanadium react in the presence of

Downloaded from Digital Engineering Library @ McGraw-Hill (www.digitalengineeringlibrary.com)
Copyright © 2004 The McGraw-Hill Companies. All rights reserved.
Any use is subject to the Terms of Use as given at the website.

STONE & WEBSTER–INSTITUT FRANÇAIS DU PÉTROLE FLUID RFCC PROCESS

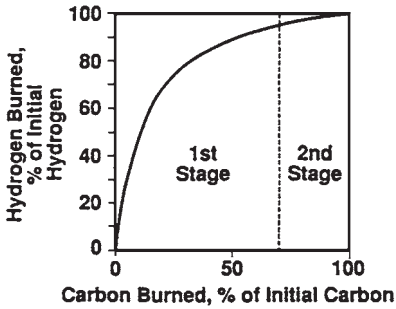

FIGURE 3.4.4 Hydrogen and hydrocarbon burn rates.

oxygen, vanadic acid is formed, which attacks the alumina in the catalyst zeolite structure. Massive dealumination causes the collapse of the zeolite structure, and the resulting catalyst is left with little activity. The equations

$$2V + \frac{5}{2}O_2 \rightarrow V_2O_5$$

and

$$V_2O_5 + 3H_2O \rightarrow \underset{\text{Vanadic acid}}{2VO\,(OH)_3}$$

describe the generation of vanadic acid. As a result, catalyst in a single-stage regenerator operating in the presence of excess oxygen and steam is prone to vanadic acid attack. Also V_2O_5 has a very low melting temperature and can be liquid at typical regenerator conditions.

Staging the regeneration can be particularly effective in this situation. In the first-stage regenerator, most of the hydrogen (and subsequent water vapor) is removed at low temperature without the presence of oxygen. This is followed by a full-burn second-stage regenerator where there is excess oxygen but very little moisture. Vanadium destruction of the catalyst structure is minimized, since very little V_2O_5 is present in the first-stage regenerator because of the lack of oxygen and lower temperature, while vanadic acid is minimized in the second-stage regenerator by lack of water. In other words, the reaction

$$2V + \frac{5}{2}O_2 \rightarrow V_2O_5$$

proceeds very slowly in the first-stage regenerator because of a lack of oxygen while the reaction

$$V_2O_5 + 3H_2O \rightarrow 2VO\,(OH)_3$$

proceeds slowly in the second-stage regenerator because of low steam content.

The two-stage regeneration is clearly less severe with regard to catalyst deactivation; and this, coupled with the newer generation of catalyst with vanadium traps, will allow refiners to run heavier crudes more efficiently and economically than ever before.

Downloaded from Digital Engineering Library @ McGraw-Hill (www.digitalengineeringlibrary.com)
Copyright © 2004 The McGraw-Hill Companies. All rights reserved.
Any use is subject to the Terms of Use as given at the website.

STONE & WEBSTER–INSTITUT FRANÇAIS DU PÉTROLE FLUID RFCC PROCESS

Catalyst Cooler System

The S&W-IFP heavy residual R2R units (feed CCR greater than 6.0 wt % or 7.0 wt % with MTC) design includes well-proven catalyst cooler technologies. The same catalyst cooler designs can also be provided for an existing FCC regenerator. These designs are operating in more than 20 crackers, with several more in the design and construction stages. A few features of the Stone & Webster catalyst cooler systems are

- Dense-phase, downward catalyst flow
- Slide-valve-controlled catalyst circulation
- Turndown capability from 0 to 100 percent
- No tube sheet required
- High mechanical reliability
- Cold wall design
- All carbon-steel construction
- High heat-transfer and low tube wall temperature
- 100 percent on-stream factor

Catalyst cooler duties can range from as low as 2×10^6 kcal/h up to 35×10^6 kcal/h. In the event that more than a 35×10^6 kcal/h cooler is required, multiple catalyst coolers can be employed on a regenerator.

A schematic diagram for a catalyst cooler coupled to a regenerator (second-stage regenerator in a two-stage regeneration system) is shown in Fig. 3.4.5. Catalyst level inside the cooler is controlled by the inlet catalyst slide valve. Gross temperature control of the regenerator is achieved by the bottom catalyst slide valve, and fine temperature control is achieved by the cooler fluidization air. An optional design eliminates the inlet slide valve and operates with the cooler full of catalyst.

S&W-IFP Technology Features

S&W-IFP offers many technology features which improve the product selectivity, unit capacity, and operability of our R2R designs. These same features are available to refiners who wish to upgrade existing FCC units. In fact, various aspects of the S&W-IFP FCC process have been applied to more than 100 FCC revamps.

Feed Injection System. The feedstock injection system and lower portion of the feed riser are the most critical parts of the R2R/FCC. The earlier pioneering and patented developments of Total Petroleum Inc. have convinced the refining industry of the value and benefits of advanced feed injection. Basic elements of the S&W-IFP feed injection system are as follows:

- Dense-phase flow of catalyst up to the feed injection point, employing small quantities of steam to stabilize catalyst flow and maintain a uniform catalyst flux across the riser
- Atomization of the feed external to the riser using steam in a simple but efficient two-fluid nozzle not involving complex internals subject to plugging and erosion
- Introduction of feed into an upward-flowing dense phase of catalyst in a manner which achieves the penetration and turbulence necessary to accomplish rapid heat transfer from the hot catalyst to the fine oil droplets, ensuring rapid vaporization

Downloaded from Digital Engineering Library @ McGraw-Hill (www.digitalengineeringlibrary.com)
Copyright © 2004 The McGraw-Hill Companies. All rights reserved.
Any use is subject to the Terms of Use as given at the website.

STONE & WEBSTER–INSTITUT FRANÇAIS DU PÉTROLE FLUID RFCC PROCESS

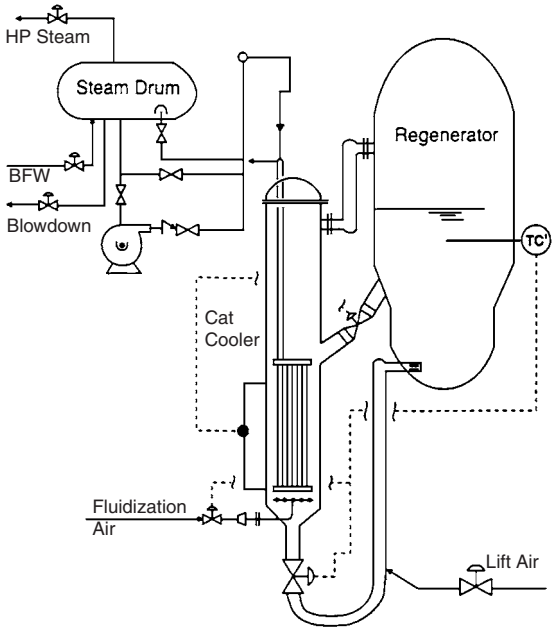

FIGURE 3.4.5 General catalyst cooler arrangement.

Table 3.4.6 lists actual commercial product yield improvements observed after replacing older feed injection systems with the S&W-IFP design.

Basic elements of the S&W-IFP feed injection nozzles are shown in Fig. 3.4.6. This two-fluid nozzle works by injecting oil under pressure against a target plate to break the oil into thin sheets that the steam shears as it moves across and through the oil. The oil mist is injected into the riser through a specially designed tip which ensures maximum riser coverage without impinging and damaging the riser wall.

This feed injection system was developed for residual FCC operations where the residual feed is highly viscous and difficult to atomize. To provide adequate atomization of the residual feedstock, this nozzle design uses oil pressure, steam pressure, and steam rate. For vacuum gas oil feedstocks which are considerably easier to atomize, oil pressure and steam rates can be significantly reduced below those of residual operations.

Mix Temperature Control

An important concern in processing heavy feedstocks with substantial amounts of residual oil is to ensure rapid feed vaporization. This is critical to minimize unnecessary coke deposition due to incomplete vaporization. Unfortunately, in conventional designs, the mix temperature is essentially dependent on the riser outlet temperature. Typically the mix temperature is about 20 to 40°C higher than the riser outlet temperature and can be changed only marginally by the catalyst/oil ratio.

In many cases, raising the riser outlet temperature to adjust the mix temperature is not desirable since this may result in undesirable nonselective cracking reactions with high

Downloaded from Digital Engineering Library @ McGraw-Hill (www.digitalengineeringlibrary.com)
Copyright © 2004 The McGraw-Hill Companies. All rights reserved.
Any use is subject to the Terms of Use as given at the website.

STONE & WEBSTER–INSTITUT FRANÇAIS DU PÉTROLE FLUID RFCC PROCESS

TABLE 3.4.6 Incremental S&W-IFP Feed Injection System Product Yields

Product	Delta yields	
	Unit A	Unit B
Dry gas, wt %	+0.0	−1.3
C_3/C_4, LV %	+1.5	+1.5
Gasoline, LV %	+3.4	+6.2
Light cycle oil, LV %	+1.6	−4.5
Slurry, LV %	−6.5	−0.3
Coke, wt %	+0.0	−0.1
Conversion, LV %	+4.9	+4.8

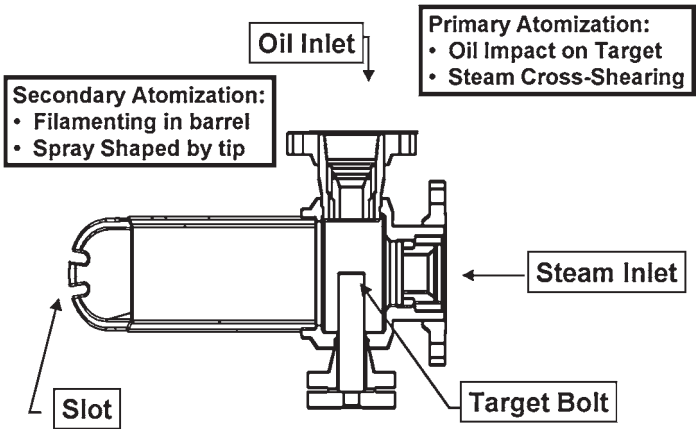

FIGURE 3.4.6 S&W IFP feed injection nozzle.

production of dry gas. The problem becomes even more critical with less severe operating conditions for maximum distillate production. To address this problem and make the above objectives compatible with each other, the riser outlet temperature must be independently adjusted. This is achieved with MTC developed and patented by IFP-Total.

MTC is performed by recycling a selected liquid cut downstream of the fresh feed injection zone. It roughly separates the riser into two reaction zones:

- An upstream zone, characterized by high temperature, high catalyst/oil ratio, and very short contact time
- A downstream zone, where the reaction proceeds under more conventional and milder catalytic cracking conditions

Creating two separate cracking zones in the riser permits fine tuning of the feed vaporization and cracking to desired products. With MTC, it is possible to raise the mix temperature while maintaining or even lowering the riser outlet temperature. Figure 3.4.7 illustrates the MTC nozzle arrangement and the three temperature zones.

Downloaded from Digital Engineering Library @ McGraw-Hill (www.digitalengineeringlibrary.com)
Copyright © 2004 The McGraw-Hill Companies. All rights reserved.
Any use is subject to the Terms of Use as given at the website.

STONE & WEBSTER–INSTITUT FRANÇAIS DU PÉTROLE FLUID RFCC PROCESS

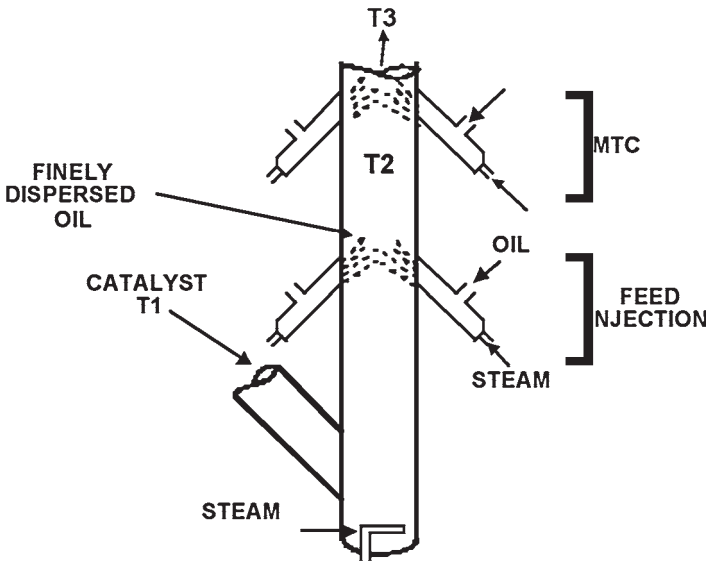

FIGURE 3.4.7 Mix zone temperature control.

The primary objective of the MTC system is to provide an independent control of the mix temperature. However, as a heat sink device similar to a catalyst cooler, MTC can be used to increase the amount of residual feed processed in the unit.

Riser Termination Device

Numerous studies have shown that postriser vapor residence time leads to thermal cracking and continued catalyst cracking in the reactor vessel. Unfortunately, these postriser vapor-phase reactions are extremely nonselective and lead to degradation of valuable liquid products, high dry-gas make, and high hydrogen transfer in liquefied petroleum gas (LPG) olefins (low olefin selectivity). The factors that contribute to these phenomena are temperature, time, and surface area. S&W-IFP's riser termination technology is designed to control all three factors.

S&W-IFP offer a variety of termination technologies to effectively control postriser cracking. Rough-cut cyclones with modified outlet tubes, a linear disengaging device (LD^2), and a close-coupled version referred to as a reactor separator-stripper (RS^2) have all been successfully used. A close-coupled system that includes a dilute phase stripper has also given state-of-the-art performance. Two of these separators are shown in Fig. 3.4.8.

These technologies offer the refiner options that are easy to operate, give low catalyst carryover, and can provide dilute phase stripping.

BP Product Vapor Quench

This technology was developed and patented by Amoco (now BP) and is offered to the industry by Stone & Webster and IFP under an exclusive arrangement. Reactant vapors are

Downloaded from Digital Engineering Library @ McGraw-Hill (www.digitalengineeringlibrary.com)
Copyright © 2004 The McGraw-Hill Companies. All rights reserved.
Any use is subject to the Terms of Use as given at the website.

STONE & WEBSTER–INSTITUT FRANÇAIS DU PÉTROLE FLUID RFCC PROCESS

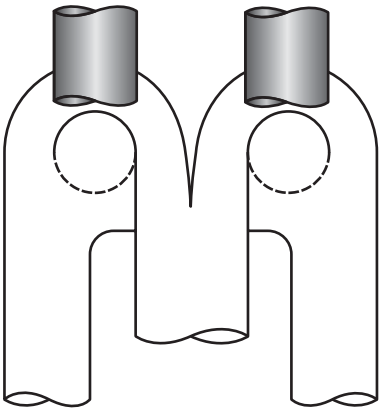

Linear Disengager

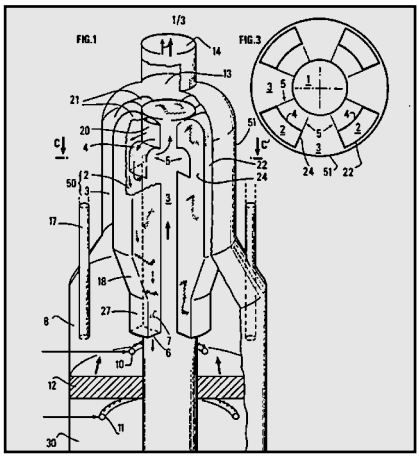

Reactor Separator Design with Integral Stripper

FIGURE 3.4.8 Linear disengager and reactor separator and stripper.

quenched after leaving the riser termination system substantially free of catalyst, by injecting a light cycle oil quench. By employing quench technology, nonselective thermal reactions are arrested, resulting in higher gasoline yields and lower dry gas production. In addition, use of the quench technology further preserves the LPG olefins and gasoline octane, minimizes the formation of diolefins, and enhances gasoline stability.

The effectiveness of vapor quench is shown in Table 3.4.7. The data indicate that a reduction in dry gas production is observed even at low riser outlet temperatures. As expected, the impact of quench in terms of dry gas reduction and gasoline yield improvement is more marked at higher temperatures.

The combination of the S&W-IFP riser termination devices and Amoco's vapor quench virtually eliminates undesirable postriser reactions.

Stripper Design

The traditional disk and doughnut stripping technology has been successfully used in grassroots and revamp designs. However, these designs lose efficiency when the catalyst flux rates approach 1100 to 1200 lb/ft^2 · min. Structured packing can be used in the place of the disk and doughnuts or shed decks, with the result being

1. More stages of stripping
2. Use of the entire cross-sectional area of the stripper for catalyst flow
3. Less catalyst entrained to the R_x cyclones
4. Reuse of the existing stripper shell

For a new FCC unit, a stripper can be designed that will operate satisfactorily at 2 to 3 times the design catalyst flux. The improved contacting is due to the lower catalyst velocity going down the stripper which allows smaller steam bubbles to rise rather than having them either coalesce into larger bubbles to go up the stripper or be simply swept along with the catalyst to the bottom exit of the vessel.

Downloaded from Digital Engineering Library @ McGraw-Hill (www.digitalengineeringlibrary.com)
Copyright © 2004 The McGraw-Hill Companies. All rights reserved.
Any use is subject to the Terms of Use as given at the website.

STONE & WEBSTER–INSTITUT FRANÇAIS DU PÉTROLE FLUID RFCC PROCESS

TABLE 3.4.7 Impact of Reactor Vapor Quench on FCC Yields

	Unit A	Unit B	Unit C
Temperature, °C			
Riser outlet	513	549	532
After quench	484	519	494
Yield shifts, wt %			
Dry gas	−0.23	−0.80	−0.66
Gasoline	+0.43	+1.80	+2.89

The two types of strippers are shown in Fig. 3.4.9. Since the stripper is a multistage contacting tower, putting in more efficient contactors improves the overall performance. This is completely analogous to replacing trays with packing in a distillation tower.

MECHANICAL DESIGN FEATURES

The S&W-IFP R2R mechanical design philosophy is based on multiple concepts to provide high reliability and maintainability with longer run lengths. Mechanical design efforts have focused on areas of an FCC unit that have historically caused high maintenance costs and increased downtime. These efforts have resulted in an overall mechanical design capable of providing up to 5 years of operation between turnarounds. Some of the features are discussed here.

Cold Wall Design

The cold wall design concept is emphasized throughout the unit in the riser, reactor, regenerators, catalyst cooler, external transfer lines, slide valves, and external cyclone. Internal refractory insulation of vessel pressure parts sufficiently reduces the skin temperatures to permit use of less expensive and easier-to-maintain carbon-steel materials. Lower metal temperatures result in less thermal expansion of the components, minimizing the need for expansion joints to compensate for differential thermal expansion between interconnected components and transfer lines.

External surface areas of the pressure parts are exposed for on-line inspection, thereby reducing inspection and maintenance costs. The internal refractory protects the pressure shell from catalyst erosion, while metal hot spots can be readily detected before they progress to a potentially dangerous level.

Feed Nozzle Fabrication

The S&W-IFP proprietary feed injection nozzles are installed through sleeves in the riser wall. Erosion of the riser wall is avoided by careful selection of the entrance angle of the sleeve and the design of the nozzle spray angle. The nozzle tip and atomizing chamber are made from erosion-resistant material to virtually eliminate wear. In the unlikely event of erosion, those surfaces exposed to erosive conditions are easily replaced and are designed so that normal maintenance can be performed during a scheduled turnaround with removal of the nozzle from the vessel sleeve. Typically, it is only necessary to inspect the nozzles at turnaround, and only rarely is any maintenance required.

Downloaded from Digital Engineering Library @ McGraw-Hill (www.digitalengineeringlibrary.com)
Copyright © 2004 The McGraw-Hill Companies. All rights reserved.
Any use is subject to the Terms of Use as given at the website.

STONE & WEBSTER–INSTITUT FRANÇAIS DU PÉTROLE FLUID RFCC PROCESS

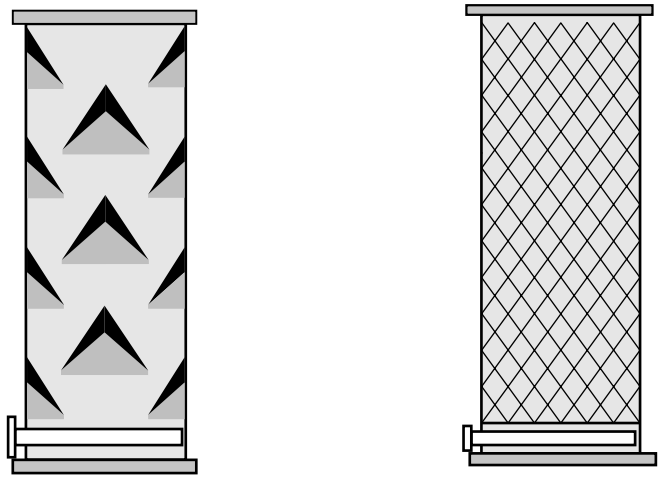

FIGURE 3.4.9 Stripper geometric considerations.

External Cyclones

Cold wall external cyclones are used on the second-stage regenerator to remove them from the internal, hot environment. The cyclones are attached directly to the cold wall regenerator and the minimal differential thermal expansion is easily accommodated. The size and length/diameter ratio of the external cyclones are not limited by the internal dimensions of the regenerator; therefore, more efficient cyclones can be designed with a shorter, less expensive regenerator. In addition, the external cyclones offer longer turnaround cycles, are insensitive to thermal excursions, and are subject to direct inspections while in operation. The cyclones can be easily monitored for mechanical reliability by using infrared cameras and for process performance by monitoring the dipleg levels with level indicators. Internal cyclones could be used where second-stage temperatures are not expected to exceed 1400°F (760°C).

Combustion Air Rings

The S&W-IFP design utilizes proprietary combustion air rings instead of dome or pipe grids. The design provides optimum air distribution and mixing, both vertically and laterally, and overcomes problems of material cracking, distributor erosion, and nozzle erosion experienced with other designs. The use of properly designed nozzles and high-density refractory material on the rings eliminates all damage due to erosion. A combustion air ring is shown in Fig. 3.4.10.

FCC REVAMP TO R2R (SECOND-STAGE REGENERATION ADDITION)

Adding a second-stage regenerator is an effective means of converting an existing FCC unit to residual service without losing throughput. To date, three FCC units have been

Downloaded from Digital Engineering Library @ McGraw-Hill (www.digitalengineeringlibrary.com)
Copyright © 2004 The McGraw-Hill Companies. All rights reserved.
Any use is subject to the Terms of Use as given at the website.

STONE & WEBSTER–INSTITUT FRANÇAIS DU PÉTROLE FLUID RFCC PROCESS

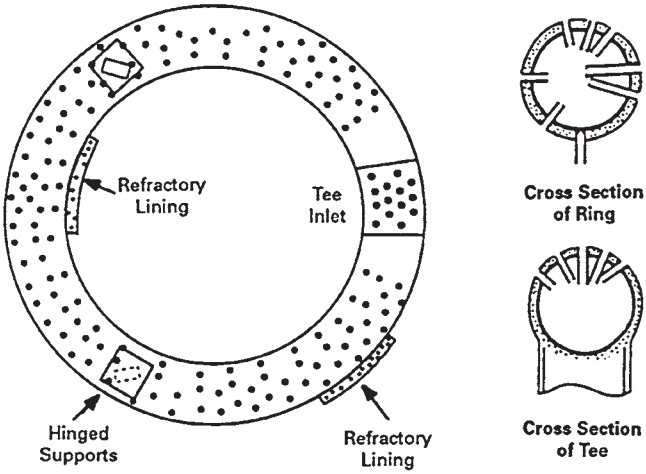

FIGURE 3.4.10 Combustion air ring.

revamped to include a second-stage regenerator and allow the processing of heavy residual feedstocks. These designs retain the existing regenerator as the first-stage regenerator and the reactor/stripper. A new second-stage regenerator, catalyst transfer lines, and a CO incinerator; a new or supplemental air blower; and a revamp of the flue gas handling facilities are required. By operating the first-stage regenerator in partial combustion mode, as explained earlier, no additional heat removal facilities will be required up to a feed CCR of 6.0 wt %. Shown in Fig. 3.4.11 is an FCC unit revamped to include a second-stage regenerator; the figure indicates both new and existing equipment.

REFERENCES

1. Raymond Mott, "FCC Catalyst Management for Resid Processing," First FCC Forum, Stone & Webster Engineering Corporation, The Woodlands, Tex., May 11–13, 1994.
2. B. E. Reynolds, E. C. Brown, and M. A. Silverman, "Clean Gasoline via VRDS/RFCC," *Hydrocarbon Processing,* April 1992, pp. 43–51.
3. Warren S. Letzsch, "Catalytic Cracking Update," 4th Stone & Webster/IFP Licensors Forum, Houston, Tex., May 2–5, 2000.
4. Warren S. Letzsch, "Stone & Webster/IFP Your Catalytic Cracking Supermarket," 12th Annual Stone & Webster Refining Seminar, San Francisco, Oct. 10, 2000.
5. Warren S. Letzsch, "Advanced Fluid Cracking Technologies," NPRA Annual Meeting 2001, Paper AM-01-65.
6. Warren S. Letzsch, "Fluid Catalytic Cracking Meets Multiple Challenges," NPRA Annual Meeting 2002, Paper AM-02-26.

Downloaded from Digital Engineering Library @ McGraw-Hill (www.digitalengineeringlibrary.com)
Copyright © 2004 The McGraw-Hill Companies. All rights reserved.
Any use is subject to the Terms of Use as given at the website.

STONE & WEBSTER–INSTITUT FRANÇAIS DU PÉTROLE FLUID RFCC PROCESS

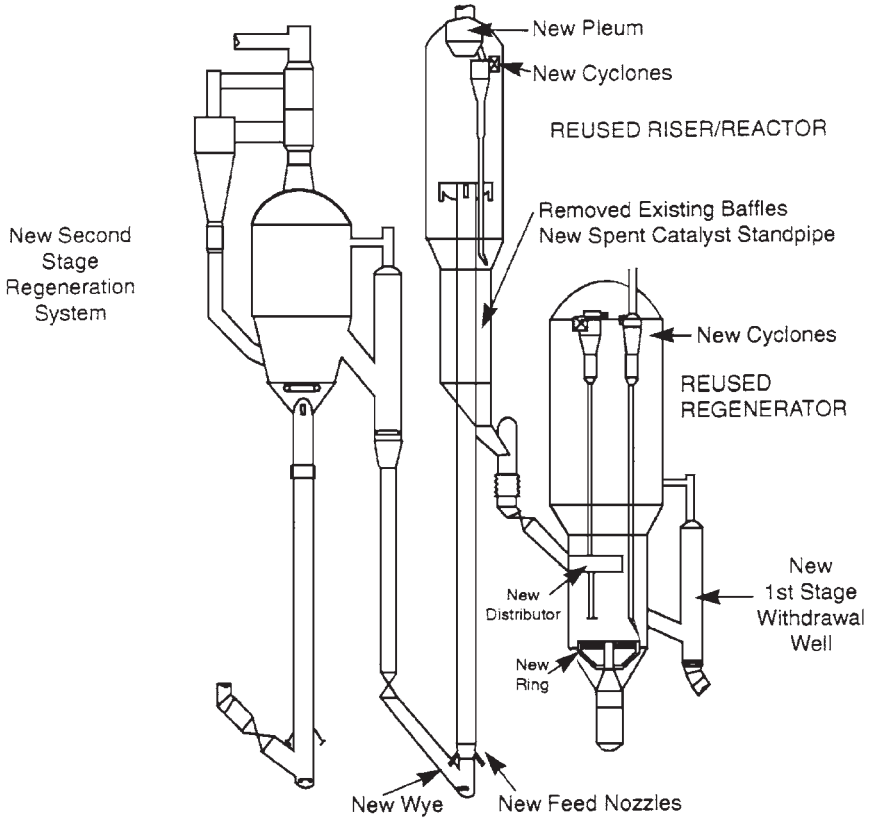

FIGURE 3.4.11 Side-by-side regenerator RFCC revamp design.

Downloaded from Digital Engineering Library @ McGraw-Hill (www.digitalengineeringlibrary.com)
Copyright © 2004 The McGraw-Hill Companies. All rights reserved.
Any use is subject to the Terms of Use as given at the website.

Source: HANDBOOK OF PETROLEUM REFINING PROCESSES

P · A · R · T · 4

CATALYTIC REFORMING

Downloaded from Digital Engineering Library @ McGraw-Hill (www.digitalengineeringlibrary.com)
Copyright © 2004 The McGraw-Hill Companies. All rights reserved.
Any use is subject to the Terms of Use as given at the website.

Downloaded from Digital Engineering Library @ McGraw-Hill (www.digitalengineeringlibrary.com)
Copyright © 2004 The McGraw-Hill Companies. All rights reserved.
Any use is subject to the Terms of Use as given at the website.

Source: HANDBOOK OF PETROLEUM REFINING PROCESSES

CHAPTER 4.1
UOP PLATFORMING PROCESS

Mark Lapinski, Lance Baird, and Robert James
UOP LLC
Des Plaines, Illinois

PROCESS EVOLUTION

The Platforming* process is a UOP*-developed and -engineered catalytic reforming process in widespread use today throughout the petroleum and petrochemical industries. The first UOP Platforming unit went on-stream in 1949. The Platforming process has since become a standard feature in refineries worldwide.

In the Platforming process, light petroleum distillate (naphtha) is contacted with a platinum-containing catalyst at elevated temperatures and hydrogen pressures ranging from 345 to 3450 kPa (50 to 500 lb/in^2 gage). Platforming produces a high-octane liquid product that is rich in aromatic compounds. Chemical-grade hydrogen, light gas, and liquefied petroleum gas (LPG) are also produced as reaction by-products.

Originally developed to upgrade low-octane-number straight-run naphtha to high-octane motor fuels, the process has since been applied to the production of LPG and high-purity aromatics. A wide range of specially prepared platinum-based catalysts permit tailored processing schemes for optimum operation. With proper feed preparation, Platforming efficiently handles almost any refinery naphtha.

Since the first Platforming unit was commercialized, UOP has been at the industry forefront in advancing reforming technology. UOP has made innovations and advances in process-variable optimization, catalyst formulation, equipment design, and maximization of liquid and hydrogen yields. Since higher yields and octane are obtained at low pressure and high severity, innovations at UOP were driven to meet these objectives while controlling the coke deposition and catalyst deactivation.

The first Platforming units were designed as semiregenerative (SR), or fixed-bed, units employing monometallic catalysts. Semiregenerative Platforming units are periodically shut down to regenerate the catalyst. This regeneration includes burning off catalyst coke and reconditioning the catalyst's active metals. To maximize the length of time (cycle) between regenerations, these early units were operated at high pressures in the range of 2760 to 3450 kPa (400 to 500 lb/in^2 gage).

A typical SR Platforming flow diagram is presented in Fig. 4.1.1. In the process flow, feed to the Platforming unit is mixed with recycled hydrogen gas, preheated by a feed-

*Trademark and/or service mark of UOP.

Downloaded from Digital Engineering Library @ McGraw-Hill (www.digitalengineeringlibrary.com)
Copyright © 2004 The McGraw-Hill Companies. All rights reserved.
Any use is subject to the Terms of Use as given at the website.

UOP PLATFORMING PROCESS

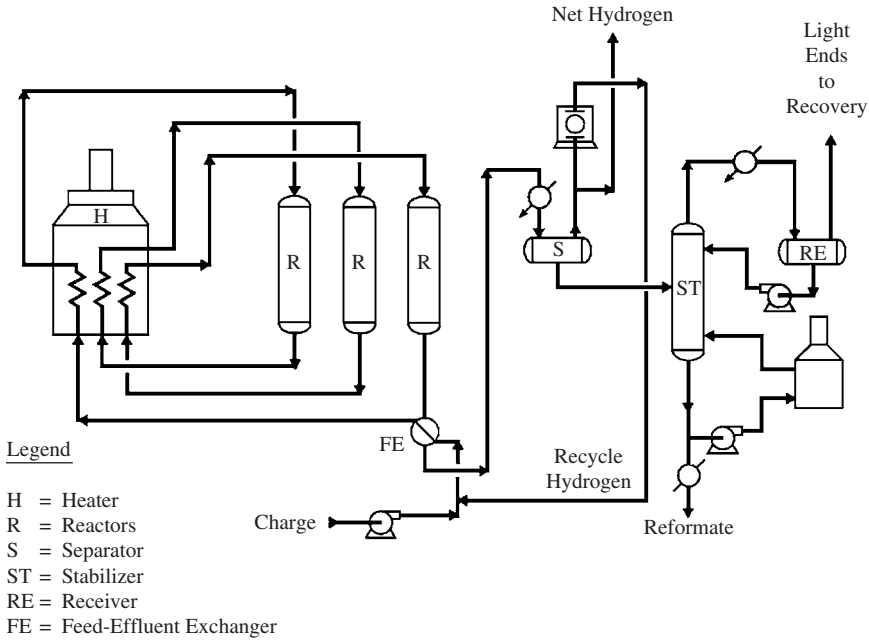

FIGURE 4.1.1 UOP Platforming process.

effluent exchanger, further heated to reaction temperature by a fired heater, and then charged to the reactor section. Because most of the reactions that occur in the Platforming process are endothermic, the reactor section is separated into several stages, or reactors. Fired heaters are installed between these reactors to reheat the process stream up to the correct temperature for the next stage. Effluent from the last reactor is cooled by exchanging heat with the feed for maximum heat recovery. Additional cooling to near-ambient temperature is provided by air or water cooling. The effluent is then charged to the separation section, where the liquid and gas products are separated. A portion of the gas from the separator is compressed and recycled to the reactor section. The net hydrogen produced is sent to hydrogen users in the refinery complex or to the fuel header. The separator liquid is pumped to a product stabilizer, where the more-volatile light hydrocarbons are fractionated from the high-octane liquid product.

UOP initially improved the Platforming process by introducing bimetallic catalysts to SR Platforming units. These catalysts enabled a lower-pressure, higher-severity operation: about 1380 to 2070 kPa (200 to 300 lb/in^2 gage), at 95 to 98 octane with typical cycle lengths of 1 year. The increased coking of the catalyst at the higher severity limited the operating run length and the ability to further reduce pressure. Catalyst development alone could not solve these problems; process innovations were needed. In the 1960s, cyclic reforming was developed to sidestep this barrier. Cyclic reforming employs fixed-bed reforming, but the reactors can be individually taken off-line, regenerated, and then put back into service without shutting down the unit and losing production.

UOP recognized the limitations of fixed-bed catalyst stability and so commercialized Platforming with continuous regeneration, the CCR* Platforming process, in 1971. The

*Trademark and/or service mark of UOP.

Downloaded from Digital Engineering Library @ McGraw-Hill (www.digitalengineeringlibrary.com)
Copyright © 2004 The McGraw-Hill Companies. All rights reserved.
Any use is subject to the Terms of Use as given at the website.

UOP PLATFORMING PROCESS

process employs continuous catalyst regeneration in which catalyst is continuously removed from the last reactor, regenerated in a controlled environment, and then transferred back to the first reactor (Fig. 4.1.2). The CCR Platforming process represents a step change in reforming technology. With continuous regeneration, coke laydown is no longer an issue because the coke is continuously burned off and the catalyst is reconditioned to its original performance. The CCR Platforming process has enabled ultralow-pressure operations at 345 kPa (50 lb/in^2 gage) and produced product octane levels as high as 108. The continuous regeneration approach has been very successful with more than 95 percent of the new catalytic reformers being designed as CCR Platforming units. In addition, many units that were originally built as SR Platforming units have been revamped to CCR Platforming units.

In summary, the UOP Platforming process has evolved continuously throughout its history. The operating pressure has been lowered by more than 2760 kPa (400 lb/in^2 gage), and hydrogen yield has doubled. Product octane was increased by more than 12 numbers along with a C_5+ yield increase of 2 liquid volume percent (LV %). The evolution of UOP Platforming performance is depicted in Fig. 4.1.3, which shows the increase in both C_5+ yield and octane through time and innovation compared to the theoretical limit.

PROCESS CHEMISTRY

Feed and Product Compositions

The Platforming naphtha charge typically contains C_6 through C_{11} paraffins, naphthenes, and aromatics. The primary purpose of the Platforming process is to produce aromatics from the paraffins and naphthenes. The product stream is a premium-quality gasoline

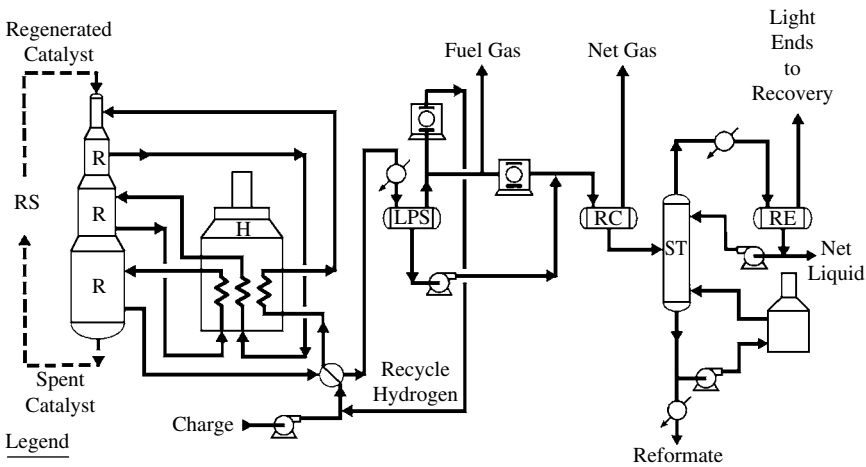

Legend

H = Heater
LPS = Low Pressure Separator
R = Reactor
RC = Recontractor
RE = Receiver
RS = Regeneration Section
ST = Stabilizer

FIGURE 4.1.2 UOP CCR Platforming process.

Downloaded from Digital Engineering Library @ McGraw-Hill (www.digitalengineeringlibrary.com)
Copyright © 2004 The McGraw-Hill Companies. All rights reserved.
Any use is subject to the Terms of Use as given at the website.

UOP PLATFORMING PROCESS

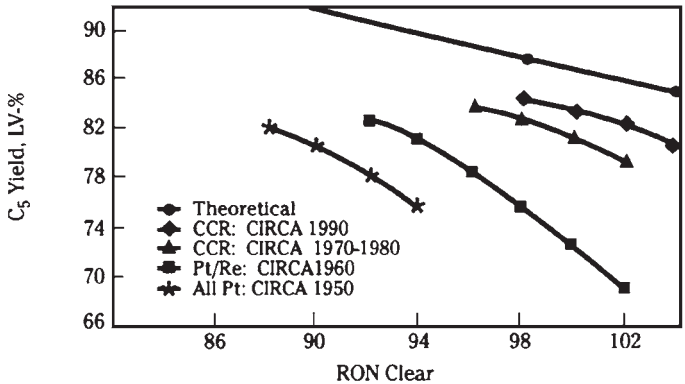

FIGURE 4.1.3 Evolution of the UOP Platforming performance.

blending component because of the high-octane values of the aromatics. Alternatively, the aromatics-rich product stream can be fed to a petrochemical complex where valuable aromatic products such as benzene, toluene, and xylene (BTX) can be recovered. In motor fuel applications, the feedstock generally contains the full range of C_6 through C_{11} components to maximize gasoline production from the associated crude run. In petrochemical applications, the feedstock may be adjusted to contain a more-select range of hydrocarbons (C_6 to C_7, C_6 to C_8, C_7 to C_8, and so forth) to tailor the composition of the reformate product to the desired aromatics components. For either naphtha application, the basic Platforming reactions are the same.

Naphthas from different crude sources vary greatly in their hydrocarbon composition and thus in their ease of reforming. The ease with which a particular naphtha feed is processed in a Platforming unit is determined by the mix of paraffins, naphthenes, and aromatics in the feedstock. Aromatic hydrocarbons pass through the unit essentially unchanged. Naphthenes react relatively easily and are highly selective to aromatic compounds. Paraffin compounds are the most difficult to convert, and the relative severity of the Platforming operation is determined by the level of paraffin conversion required. Low-severity (low-octane) operations require little paraffin conversion, but higher-severity operations require a significant degree of conversion.

Naphthas are characterized as lean (low naphthene and aromatic content) or rich (high naphthene and aromatic content). Rich naphthas, with a higher proportion of naphthene components, are easier to process in the Platforming unit. Figure 4.1.4 demonstrates the effect of naphtha composition on the relative conversion of the feedstock under constant operating conditions in the Platforming process. A rich naphthenic charge produces a greater volumetric yield of reformate than does a lean charge.

Reactions

Platforming reactions can generally be grouped into four categories: dehydrogenation, isomerization, dehydrocyclization, and cracking. The reactions are promoted by two kinds of active sites on the catalyst, acidic and metallic. The extent to which each of the reactions occurs for a given Platforming operation depends on the feedstock quality, operating conditions, and catalyst type.

Because the Platforming feed is made up of many paraffin and naphthene isomers, multiple reforming reactions take place simultaneously in the Platforming reactor. The rates of reac-

Downloaded from Digital Engineering Library @ McGraw-Hill (www.digitalengineeringlibrary.com)
Copyright © 2004 The McGraw-Hill Companies. All rights reserved.
Any use is subject to the Terms of Use as given at the website.

UOP PLATFORMING PROCESS

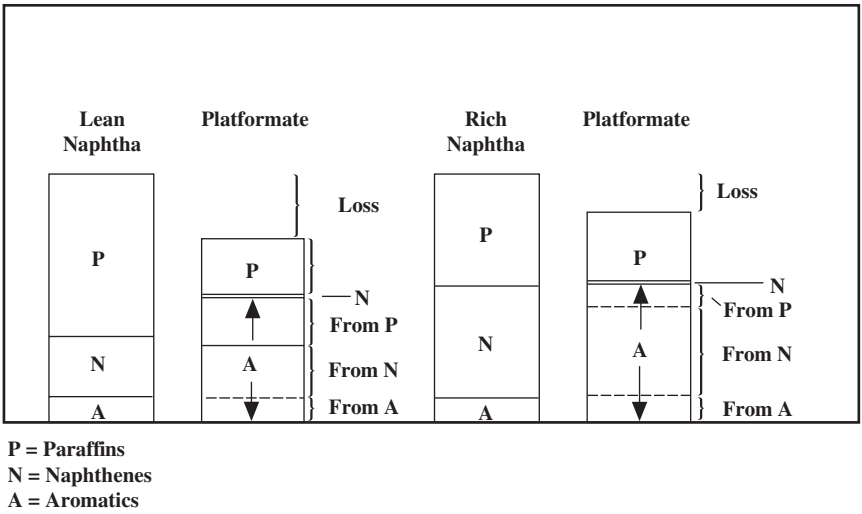

FIGURE 4.1.4 Typical conversion of lean and rich naphthas.

tion vary considerably with the carbon number of the reactant. Therefore, these multiple reactions occur in series and in parallel to one another. The generalized reaction network is illustrated in Fig. 4.1.5, and examples of the individual reactions are shown in Fig. 4.1.6.

Dehydrogenation of Naphthenes. The principal Platforming reaction in producing an aromatic from a naphthene is the dehydrogenation of an alkylcyclohexane. This reaction takes place rapidly and proceeds essentially to completion. The reaction is highly endothermic, is favored by high reaction temperature and low pressure, and is promoted by the metal function of the catalyst. Because this reaction proceeds rapidly and produces hydrogen as well as aromatics, naphthenes are the most desirable component in the Platforming feedstock.

Isomerization of Paraffins and Naphthenes. The isomerization of an alkylcyclopentane to an alkylcyclohexane must take place before an alkylcyclopentane can be converted to an aromatic. The reaction involves ring rearrangement, and thus ring opening to form a paraffin is possible. The paraffin isomerization reaction occurs rapidly at commercial operating temperatures. Thermodynamic equilibrium, however, slightly favors the isomers that are more highly branched. Because branched-chain isomers have a higher octane than straight-chain paraffins, this reaction improves product octane. Isomerization reactions are promoted by the acid function of the catalyst.

Dehydrocyclization of Paraffins. The most-difficult Platforming reaction to promote is the dehydrocyclization of paraffins. This reaction consists of molecular rearrangement of a paraffin to a naphthene. Paraffin cyclization becomes easier with increasing molecular weight of the paraffin because the probability of ring formation increases. Partially offsetting this effect is the greater likelihood of the heavy paraffins to hydrocrack. Dehydrocyclization is favored by low pressure and high temperature and requires both the metal and acid functions of the catalyst.

Downloaded from Digital Engineering Library @ McGraw-Hill (www.digitalengineeringlibrary.com)
Copyright © 2004 The McGraw-Hill Companies. All rights reserved.
Any use is subject to the Terms of Use as given at the website.

UOP PLATFORMING PROCESS

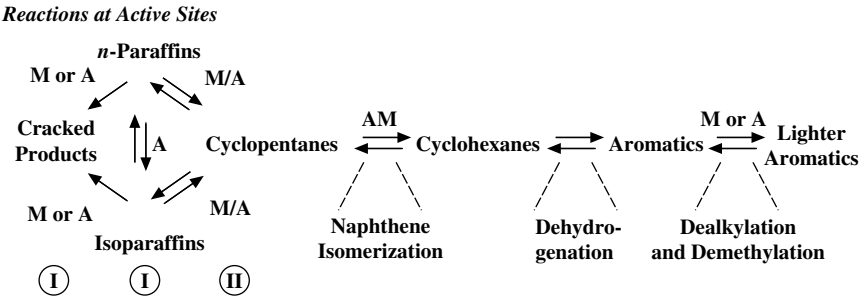

FIGURE 4.1.5 Generalized Platforming reaction network.

Hydrocracking and Dealkylation. In addition to naphthene isomerization and paraffin cyclization reactions, the acid function catalyzes paraffin hydrocracking. Paraffin hydrocracking is favored by high temperature and high pressure. As paraffins crack and disappear from the gasoline boiling range, the remaining aromatics become concentrated in the product, thereby increasing product octane. However, hydrogen is consumed, and the net liquid product is reduced, making this reaction undesirable.

Dealkylation of aromatics includes both making the alkyl group (a side chain on the aromatic ring) smaller and removing the alkyl group completely. Examples are converting ethylbenzene to toluene and converting toluene to benzene, respectively. If the alkyl side chain is large enough, the reaction is similar to paraffin cracking. Dealkylation is favored by high temperature and high pressure.

Relative Reaction Rate

The primary reactions for the C_6 and C_7 paraffins proceed at vastly different rates. Because the hydrocracking rate for hexane is at least 3 times greater than the dehydrocyclization rate for hexane, only a small fraction of normal hexane is converted to aromatics. The rate of heptane dehydrocyclization is approximately 4 times that of hexane. Therefore, a substantially greater conversion of normal heptane to aromatics occurs than for hexane.

Reactions of naphthenes in the feedstock show significant differences between the alkylcyclopentanes and the alkylcyclohexanes. The alkylcyclopentanes react slowly and follow two competing paths. The desired reaction is isomerization to an alkylcyclohexane followed by dehydrogenation to aromatics. The competing reaction is decyclization to form paraffins. In contrast, the alkylcyclohexanes dehydrogenate rapidly and nearly completely to aromatics.

The relative ease of isomerization to an alkylcyclohexane increases with increasing carbon number. For example, the ratio of alkylcyclopentane isomerization rate to total alkylcyclopentane reaction rate is 0.67 for methylcyclopentane at low pressure. This ratio increases to 0.81 for dimethylcyclopentane, one carbon number higher.

The conversion of hydrocarbon types as a function of position in the catalyst bed for a moderate-severity Platforming operation is shown in Figs. 4.1.7 to 4.1.10. The feedstock is a rich BTX naphtha with a paraffin, naphthenes, and aromatics (PNA) content of 42, 34, and 24 wt %, respectively. As the naphtha feed passes through the catalyst bed, total aromatics concentration increases and the concentration of naphthenes and paraf-

Downloaded from Digital Engineering Library @ McGraw-Hill (www.digitalengineeringlibrary.com)
Copyright © 2004 The McGraw-Hill Companies. All rights reserved.
Any use is subject to the Terms of Use as given at the website.

UOP PLATFORMING PROCESS

Dehydrogenation of Naphthene

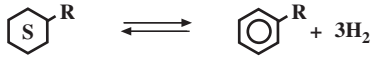

Isomerization of Paraffins and Naphthenes

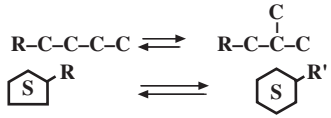

Dehydrocyclization of Paraffins

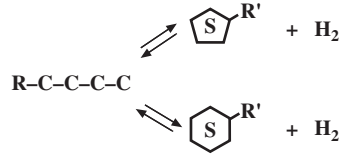

Hydrocracking

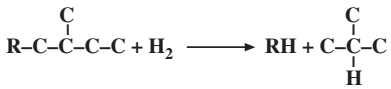

Demethylation

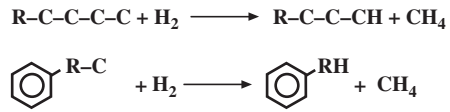

Dealkylation of Aromatics

Symbol Key

Where 

, 

= **Saturated Rings (Naphthenes)**


= **A Dehydrogenated Ring (Aromatic)**

R, R,' R'', = Radicals or Side Chains Attached to the Ring, for Example, — CH_2CH_3, an Ethyl Radical

FIGURE 4.1.6 Generalized Platforming reactions.

Downloaded from Digital Engineering Library @ McGraw-Hill (www.digitalengineeringlibrary.com)
Copyright © 2004 The McGraw-Hill Companies. All rights reserved.
Any use is subject to the Terms of Use as given at the website.

UOP PLATFORMING PROCESS

fins decreases as they undergo conversion (Fig. 4.1.7). The high rate of conversion of cyclohexanes is shown by the rapidly decreasing concentration of naphthenes in the first 30 percent of the catalyst volume. The remaining naphthene conversion occurs at a slower rate and is indicative of cyclopentane conversion and dehydrocyclization of paraffins through a naphthene intermediate. By the reactor outlet, the naphthene concentration approaches a low steady-state value, which represents the naphthene intermediary present in the paraffin dehydrocyclization reactions. In contrast, paraffin conversion is nearly linear across the reactor bed.

Figure 4.1.8 illustrates the conversion of the three reactive species in the Platforming feedstock. The relative rates of conversion are markedly different. In the first 20 percent of the catalyst, 90 percent of the cyclohexanes are converted, but conversion is only 15 percent for cyclopentanes and 10 percent for paraffins. Cyclopentanes are much less reactive than cyclohexanes.

Figure 4.1.9 shows the relative reaction rate of cyclopentanes by carbon number. Heavier components, which have a greater probability of isomerizing from a five- to six-

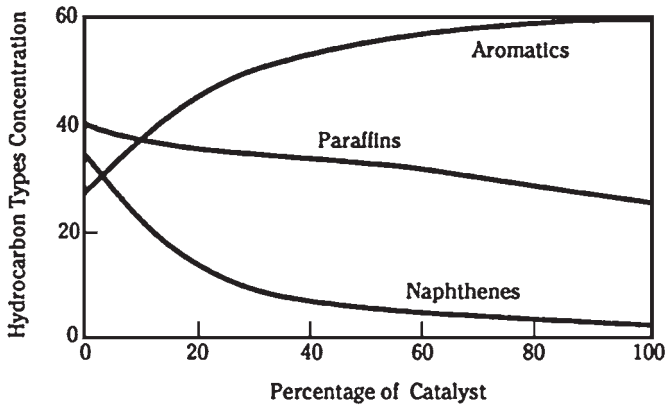

FIGURE 4.1.7 Hydrocarbon-type profiles.

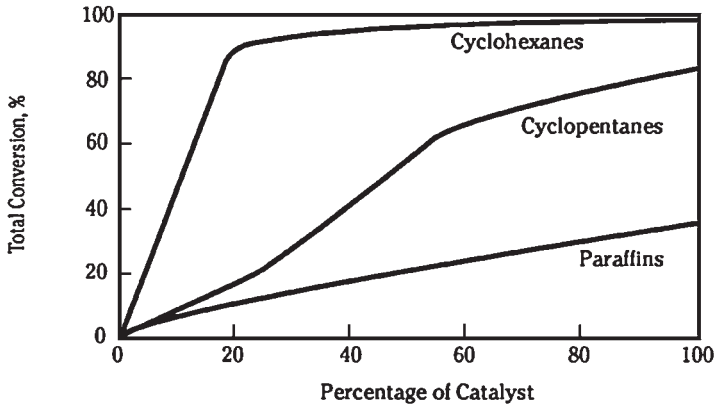

FIGURE 4.1.8 Reactant-type conversion profiles.

Downloaded from Digital Engineering Library @ McGraw-Hill (www.digitalengineeringlibrary.com)
Copyright © 2004 The McGraw-Hill Companies. All rights reserved.
Any use is subject to the Terms of Use as given at the website.

UOP PLATFORMING PROCESS

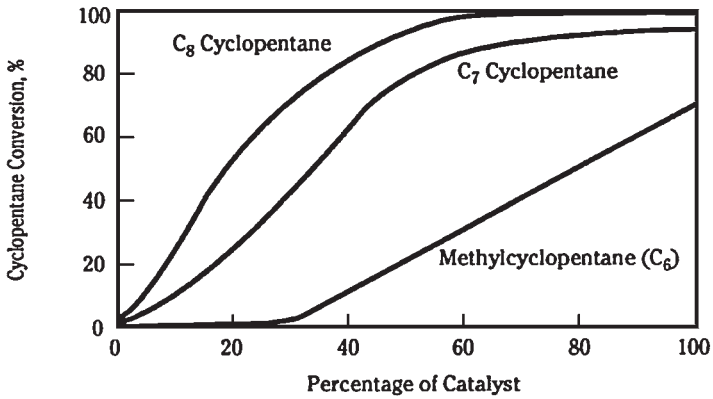

FIGURE 4.1.9 Cyclopentane conversion by carbon number.

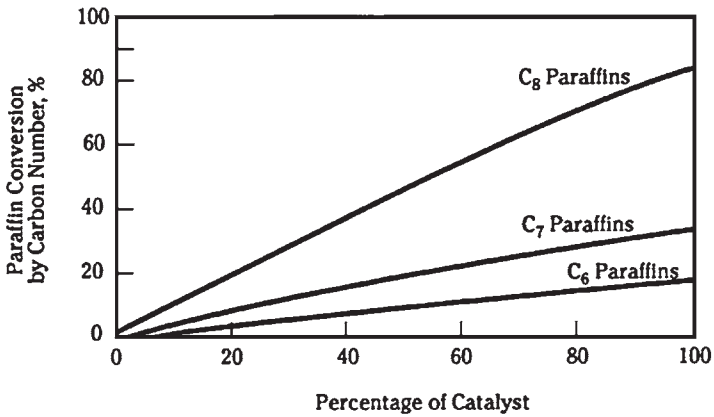

FIGURE 4.1.10 Paraffin conversion by carbon number.

carbon ring, convert more readily than do the lighter components. The most-difficult reaction, the conversion of paraffins, is characterized by carbon number in Fig. 4.1.10. As with the cyclopentanes, the heavier paraffins convert more readily than do the lighter paraffins. The relative ease of conversion associated with increasing carbon number for alkylcyclopentanes and paraffins explains why higher-boiling-range feedstocks are easier to process.

In summary, paraffins have the lowest reactivity and selectivity to aromatics and are the most difficult components to process in a Platforming unit. Although alkylcyclopentanes are more reactive and selective than paraffins, they still produce a significant amount of nonaromatic products. Alkylcyclohexanes are converted rapidly and quantitatively to aromatics and make the best reforming feedstock. As a general rule, heavier components convert more easily and selectively to aromatics than do the lighter components.

Downloaded from Digital Engineering Library @ McGraw-Hill (www.digitalengineeringlibrary.com)
Copyright © 2004 The McGraw-Hill Companies. All rights reserved.
Any use is subject to the Terms of Use as given at the website.

UOP PLATFORMING PROCESS

Heats of Reaction

Typical heats of reaction for the three broad classes of Platforming reactions are presented in Table 4.1.1. The dehydrocyclization of paraffins and dehydrogenation of naphthenes are endothermic. In commercial Platforming units, the majority of these reactions take place across the first two reactors, as indicated by the large negative-temperature differentials observed. In the final reactor, where a combination of paraffin dehydrocyclization and hydrocracking takes place, the net heat effect in the reactor may be slightly endothermic or exothermic, depending on processing conditions, feed characteristics, and catalyst.

Catalysts

Platforming catalysts are heterogeneous and composed of a base support material (usually Al_2O_3) on which catalytically active metals are placed. The first Platforming catalysts were monometallic and used platinum as the sole metal. These catalysts were capable of producing high-octane products; however, because they quickly deactivated as a result of coke formation on the catalyst, they required higher-pressure, lower-octane Platforming operations.

As refiners needed greater activity and stability to move to lower pressure and higher octane, UOP introduced bimetallic catalysts in 1968. These catalysts contained platinum and a second metal, rhenium, to meet increasing severity requirements. Catalyst metals are typically added at levels of less than 1 wt % of the catalyst by using techniques that ensure a high level of metal dispersion over the surface of the catalyst. To develop the acid functionality of the catalyst, a promoter such as chloride or fluoride is added. Most catalyst development for SR Platforming has followed the path of maximizing the efficiency and balance of the metal and acid functionalities of the catalyst system.

The performance of UOP commercial fixed-bed catalysts is shown in Fig. 4.1.11. The R-86* catalyst, which was first commercialized in 2001, has become the preferred SR Platforming catalyst. Compared to the R-56* catalyst, R-86 provides a 1.0 LV % C_5+ yield advantage and increased hydrogen yields while maintaining the same cycle length and excellent regenerability. The alumina base of R-86 has been reformulated, resulting in a lower-density support which provides lower coke make, reduced metals requirements, and reduced reload cost per reactor.

For cyclic reformers, UOP has developed a family of catalysts (both Pt-Re and Pt only) based on the R-86 support that provides increased yields, high activity, and reduced coke make. Since cyclic reactors are sequentially taken off-line for regeneration, surface area stability is important as the number of regenerations increases. UOP is improving the R-86 support to further enhance the surface area stability to even higher levels, which will increase the catalyst life and reduce reload costs over time.

With the introduction of the UOP CCR Platforming process in 1971, Platforming catalyst development began a second parallel track to address the specific needs of the con-

*Trademark and/or service mark of UOP.

TABLE 4.1.1 Heats of Reaction ΔH

Reaction	ΔH, kJ/mol H_2
Paraffin to naphthene	+44 (endothermic)
Naphthene to aromatic	+71 (endothermic)
Hydrocracking	−56 (exothermic)

Downloaded from Digital Engineering Library @ McGraw-Hill (www.digitalengineeringlibrary.com)
Copyright © 2004 The McGraw-Hill Companies. All rights reserved.
Any use is subject to the Terms of Use as given at the website.

UOP PLATFORMING PROCESS

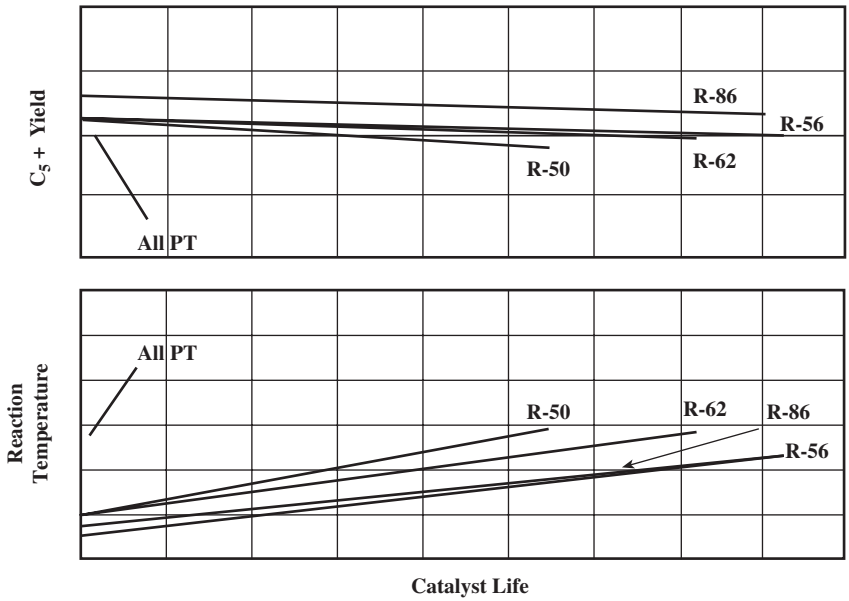

FIGURE 4.1.11 Performance summary of commercial fixed-bed UOP Platforming catalysts.

tinuous process. The first UOP CCR Platforming unit used a conventional Pt-Re catalyst, but UOP quickly developed the R-30* series catalyst to provide higher yields of gasoline and hydrogen. Catalyst development for the CCR Platforming process has focused on the following areas:

- Lower coke make to reduce regenerator investment.
- Higher tolerance to multiple regeneration cycles to maximize catalyst life and minimize catalyst costs. Reducing the rate of surface area decline is important because reduced catalyst surface area increases the difficulty of dispersing the metals on the catalyst surface and obtaining the optimum chloride level.
- High strength to reduce catalyst attrition in the unit.
- Metals optimization to reduce the platinum content of the catalyst and thus reduce the refinery working-capital requirement.

In 1992, UOP commercialized the R-130* CCR Platforming catalyst series with improved surface-area stability, activity, and strength compared to the R-30 series. The improved surface area stability of the R-130 alumina was achieved by modifying the alumina during formation, and it contains no additional components. Other CCR catalyst manufacturers obtain surface area stability by adding a component to the alumina. This method may result in a degradation of chloride retention which could decrease catalyst performance as the number of CCR cycles increases.

In 2000, UOP introduced the new R-200 catalyst series. Compared to the R-130 series, the R-200 series provides 30 percent less coke, up to 1.5 LV % higher C_5+ yields, higher

*Trademark and/or service mark of UOP.

Downloaded from Digital Engineering Library @ McGraw-Hill (www.digitalengineeringlibrary.com)
Copyright © 2004 The McGraw-Hill Companies. All rights reserved.
Any use is subject to the Terms of Use as given at the website.

UOP PLATFORMING PROCESS

hydrogen yields, and improved strength with the same high surface area stability. The reduced coke make allows enhanced operating flexibility by allowing either high throughputs or higher-octane operations.

PROCESS VARIABLES

This section describes the major process variables and their effect on unit performance. The process variables are reactor pressure, reactor temperature, space velocity, hydrogen/hydrocarbon (H_2/HC) molar ratio, chargestock properties, catalyst selectivity, catalyst activity, and catalyst stability. The relationship between the variables and process performance is generally applicable to both SR and continuous regeneration modes of operation.

Reactor Pressure

The average reactor operating pressure is generally referred to as *reactor pressure.* For practical purposes, a close approximation is the last reactor inlet pressure. The reactor pressure affects reformer yields, reactor temperature requirement, and catalyst stability.

Reactor pressure has no theoretical limitations, although practical operating constraints have led to a historical range of operating pressures from 345 to 4830 kPa (50 to 700 lb/in^2 gage). Decreasing the reactor pressure increases hydrogen and reformate yields, decreases the required temperature to achieve product quality, and shortens the catalyst cycle because it increases the catalyst coking rate. The high coking rates associated with lower operating pressures require continuous catalyst regeneration.

Reactor Temperature

The primary control for product quality in the Platforming process is the temperature of the catalyst beds. By adjusting the heater outlet temperatures, a refiner can change the octane of the reformate and the quantity of aromatics produced.

The reactor temperature is usually expressed as the weighted-average inlet temperature (WAIT), which is the summation of the product of the fraction of catalyst in each reactor multiplied by the inlet temperature of the reactor, or as the weighted-average bed temperature (WABT), which is the summation of the product of the fraction of catalyst in each reactor multiplied by the average of its inlet and outlet temperatures. Temperatures in this chapter refer to the WAIT calculation. Typically, SR Platforming units have a WAIT range of 490 to 525°C (914 to 977°F). CCR Platforming units operate at a WAIT of 525 to 540°C (977 to 1004°F).

Space Velocity

Space velocity is defined as the amount of naphtha processed over a given amount of catalyst over a given length of time. The space velocity is an indication of the residence time of contact between reactants and catalyst. When the hourly volume charge rate of naphtha is divided by the volume of catalyst in the reactors, the resulting quotient, expressed in units of h^{-1}, is the liquid hourly space velocity (LHSV). Alternatively, if the weight charge rate of naphtha is divided by the weight of catalyst, the resulting quotient, also expressed

Downloaded from Digital Engineering Library @ McGraw-Hill (www.digitalengineeringlibrary.com)
Copyright © 2004 The McGraw-Hill Companies. All rights reserved.
Any use is subject to the Terms of Use as given at the website.

UOP PLATFORMING PROCESS

in units of h^{-1}, is the weighted hourly space velocity (WHSV). Although both terms are expressed in the same units, the calculations yield different values. Whether LHSV or WHSV is used depends on the customary way that feed rates are expressed in a given location. Where charge rates are normally expressed in barrels per stream day, LHSV is typically used. Where the rates are expressed in terms of metric tons per day, WHSV is preferred.

Space velocity together with reactor temperature determines the octane of the product. The greater the space velocity, the higher the temperature required to produce a given product octane. If a refiner wishes to increase the severity of a reformer operation, she or he can either increase the reactor temperature or lower the space velocity. A change in space velocity has a small impact on product yields when the WAIT is adjusted to maintain constant severity. Higher space velocities may lead to slightly higher yields as a result of less time available in the reactors for dealkylation reactions to take place. This advantage is partially offset by the higher rate of hydrocracking reactions at higher temperatures.

Hydrogen/Hydrocarbon Molar Ratio

The H_2/HC ratio is the ratio of moles of hydrogen in the recycle gas to moles of naphtha charged to the unit. Recycle hydrogen is necessary to maintain catalyst-life stability by sweeping reaction products from the catalyst. The rate of coke formation on the catalyst is a function of the hydrogen partial pressure.

An increase in the H_2/HC ratio increases the linear velocity of the combined feed and supplies a greater heat sink for the endothermic heat of reaction. Increasing the ratio also increases the hydrogen partial pressure and reduces the coking rate, thereby increasing catalyst stability with little effect on product quality or yields. Directionally, lower H_2/HC ratios provide higher C_5+ and hydrogen yields, although this benefit is difficult to measure in commercially operating units.

Chargestock Properties

The boiling range of Platforming feedstock is typically about 100°C (212°F) to 180°C (356°F). Chargestocks with a low initial boiling point (IBP), less than 75°C (167°F) measured according to American Society for Testing and Materials specification ASTM D-86, generally contain a significant amount of C_5 components which are not converted to valuable aromatics products. These components dilute the final product, thus requiring a higher severity to achieve an equivalent product octane. For this reason, feedstocks are generally C_6+ naphthas. The endpoint of the chargestock is normally set by the gasoline specifications for the refinery with the realization that a significant rise in endpoint, typically 15 to 25°C (27 to 45°F), takes place between the naphtha charge and reformate product.

The effect of hydrocarbon types in the chargestock on aromatics yield was discussed in the "Process Chemistry" section and can be further illustrated by examining a broad range of chargestock compositions. Licensers typically develop a large database of feedstocks that have been analyzed and tested under controlled conditions to characterize expected reforming yields over a range of octanes. This database allows yields to be predicted for future chargestocks of known composition. Four chargestocks of widely varying compositions were chosen from such a database and are summarized in Fig. 4.1.12.

The chargestock range chosen covers lean through rich feeds. The aromatics-plus-cyclohexanes content is a measure of their ease of conversion, and the paraffins-plus-cyclopentanes content indicates the difficulty of reforming reactions. The effect of

Downloaded from Digital Engineering Library @ McGraw-Hill (www.digitalengineeringlibrary.com)
Copyright © 2004 The McGraw-Hill Companies. All rights reserved.
Any use is subject to the Terms of Use as given at the website.

UOP PLATFORMING PROCESS

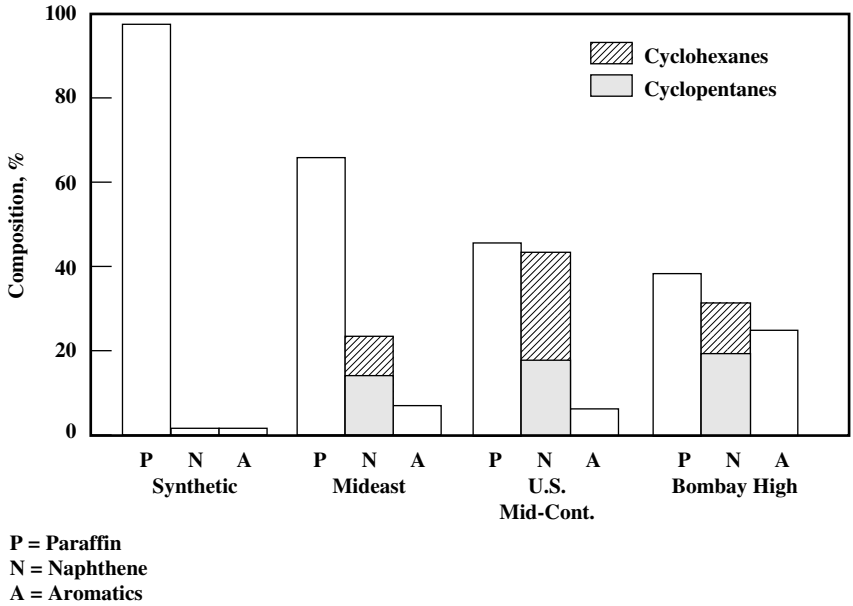

FIGURE 4.1.12 Naphtha characterization by hydrocarbon type.

feedstock composition on aromatics yield is shown in Fig. 4.1.13. Increasing conversion leads to an increase in the total yield of aromatics for each of the feedstocks. Feeds that are easier to process produce the highest yield of aromatics at any level of conversion.

Catalyst Selectivity

Catalyst selection is usually tailored to the refiner's individual needs. A particular catalyst is typically chosen to meet the yield, activity, and stability requirements of the refiner. This customization is accomplished by varying basic catalyst formulation, chloride level, platinum content, and the choice and quantity of any additional metals.

Differences in catalyst types can affect other process variables. For example, the required temperature to produce a given octane is directly related to the type of catalyst.

Catalyst selectivity can be easily described as the amount of desired product that can be yielded from a given feedstock. Usually, the selectivity of one catalyst is compared with that of another. At constant operating conditions and feedstock properties, the catalyst that can yield the greatest amount of reformate at a given octane in motor fuel applications or the greatest amount of aromatics in a BTX operation has the greatest selectivity.

Catalyst Activity and Stability

Activity is the ability of a catalyst to promote a desired reaction with respect to reaction rate, space velocity, or temperature. Activity is also expressed in a relative sense in that one catalyst is more active than another. In motor fuel applications, activity is generally expressed as the temperature required to produce reformate at a given octane, space veloc-

Downloaded from Digital Engineering Library @ McGraw-Hill (www.digitalengineeringlibrary.com)
Copyright © 2004 The McGraw-Hill Companies. All rights reserved.
Any use is subject to the Terms of Use as given at the website.

UOP PLATFORMING PROCESS

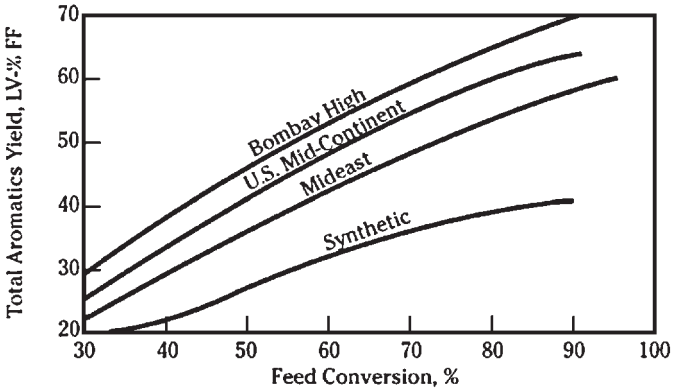

FIGURE 4.1.13 Feedstock conversion and aromatics yield.

ity, and pressure. A more active catalyst can produce reformate at the desired octane at a lower temperature.

Activity stability is a measure of the rate at which the catalyst deactivates over time. In semiregenerative reforming, stability is an indication of how long the catalyst can remain in operation between regenerations. In CCR Platforming, stability is an indication of how much coke will be formed while processing a given feed at a given severity, which, in turn, determines the size of the catalyst regeneration section.

CONTINUOUS PLATFORMING PROCESS

In the years following the invention of Platforming, the need for high-octane gasoline blend components and the demand for aromatics for petrochemicals steadily increased. This increasing market demand required refiners to operate their Platforming units at ever-higher severity. Eventually, improvements in the catalyst and process could not keep up, and the need to regenerate catalyst at shorter and shorter intervals became a serious limitation of the SR Platforming units. UOP developed the CCR Platforming process to overcome this limitation. In the CCR Platforming unit, partially coked catalyst in the reactors is continuously replaced with catalyst that has been freshly regenerated in an external regenerator (CCR section) to maintain a low average coke for the reactor catalyst. Thus, continuous high-selectivity and high-activity characteristics associated with new catalyst can be achieved at significantly higher severities than with the SR Platforming process. For example, a SR Platforming unit operates at a severity that steadily builds coke up on the catalyst surface over the length of a cycle (6 to 18 months), at which point the unit is shut down and the catalyst regenerated. Throughout the cycle, yields decline. In contrast, with a modern CCR Platforming unit, the catalyst is regenerated approximately every 3 days, and yield remains constant at fresh catalyst levels.

The CCR Platforming flow scheme incorporates many engineering innovations. Depending on the size of the unit, many SR Platforming units are also built to include some of these innovations. This design allows for an easier transition between SR and CCR Platforming units if the SR Platforming unit is later converted to meet future operating requirements.

Downloaded from Digital Engineering Library @ McGraw-Hill (www.digitalengineeringlibrary.com)
Copyright © 2004 The McGraw-Hill Companies. All rights reserved.
Any use is subject to the Terms of Use as given at the website.

UOP PLATFORMING PROCESS

Movable-Catalyst-Bed System

In a conventional SR Platforming unit, the reactors are configured side-by-side. The CCR Platforming unit uses a UOP-patented reactor stack. The reactors are stacked one on top of another to achieve a compact unit that minimizes plot area requirements. The catalyst flows gently by gravity downward from reactor to reactor, and this flow simplifies catalyst transfer and minimizes attrition. Catalyst transfer is greatly simplified in comparison to other reforming technologies, which employ side-by-side reactor configurations that require the catalyst to be pneumatically lifted from the bottom of each reactor to the top of the next reactor. In contrast, with the reactor stack, catalyst is lifted only twice during each cycle: from the bottom of the reactor stack to the top of the regenerator and then from the bottom of the regenerator back to the top of the reactor stack. The catalyst transfer requires no operator intervention. Catalyst transfer rates have been designed from as low as 91 kg/h (200 lb/h) to as high as 2721 kg/h (6000 lb/h), depending on the capacity and the operating severity of the Platforming unit.

CCR System

The ability to continuously regenerate a controlled quantity of catalyst is the most significant innovation of the CCR Platforming unit. The catalyst flows by gravity from the last reactor into an integral (to the reactor) catalyst collector vessel. The catalyst is then lifted by either nitrogen or hydrogen lifting gas to a catalyst hopper above the regeneration tower. Catalyst flows to the regeneration tower, where the catalyst is reconditioned. Regenerated catalyst is then returned to the top of the reactor stack by a transfer system similar to that used in the reactor-regenerator transfer. Thus, the reactors are continuously supplied with freshly regenerated catalyst, and product yields are maintained at fresh catalyst levels.

The regeneration and reactor sections of the unit are easily isolated to permit a shutdown of the regeneration system for normal inspection or maintenance without interrupting the Platforming operation.

Improvements are continuously being made in the CCR regeneration section design. In addition to its atmospheric and pressurized regenerators, UOP introduced the CycleMax* regenerator in 1995 which combines new innovations with the best aspects of previous CCR designs at lower cost.

Low-Pressure-Drop Features

Minimum pressure drop in the reactor section is critical for efficient ultralow-pressure operation. Low pressure drop minimizes recycle gas compressor differential pressure and horsepower. The result is lower utility consumption. The cost for even 1 lb of additional pressure drop across the compressor is high. Minimum pressure drop also permits the operation at the lowest possible average reactor pressure, which increases reformate and hydrogen yields.

UOP employs a variety of special equipment to minimize the pressure drop throughout the plant circuit. Either vertical combined feed-effluent exchangers (VCFEs) or new PACKINOX welded-plate exchangers introduced in the 1990s are used to maximize thermal efficiency and minimize pressure drop. The patented reactor stack design, fired heater design, and plot-plan layout further reduce plant pressure drop to achieve minimum compression costs.

Downloaded from Digital Engineering Library @ McGraw-Hill (www.digitalengineeringlibrary.com)
Copyright © 2004 The McGraw-Hill Companies. All rights reserved.
Any use is subject to the Terms of Use as given at the website.

UOP PLATFORMING PROCESS

Secondary-Recovery Schemes

Several innovative schemes for increased liquid recovery and separator gas purification have been developed. The need for increasing liquid recovery is more critical with the lower-pressure designs, where the production of hydrogen and C_5+ material is increased as a result of more-selective processing. This advantage can be lost if a recovery system is not installed downstream of the reactor section. At low operating pressures, the flash pressure of the separator has been reduced. Consequently, the vapor liquid equilibrium thermodynamically allows for more C_4's, C_5's, and C_6+ material to leave with the vapor, resulting in valuable C_5+ product loss and lower-purity hydrogen production. To avoid this loss, several types of improved recontacting schemes have been developed.

One scheme often used is reactor-effluent vapor-liquid recontacting. In this scheme, reactor effluent, after being cooled, is physically separated into vapor and liquid portions. Part of the vapor is directed to the recycle-compressor suction for use as recycle gas. The remaining vapor, called the *net separator gas,* is compressed by a booster compressor and discharged into either a drum or an adsorber. The liquid from the separator is also pumped to the drum or absorber to recontact with the net separator gas at elevated pressure to obtain increased liquid recovery and hydrogen purity.

Another method involves chilling the net separator gas. Depending on downstream pressure requirements, net gas from either the compressor suction or discharge is cooled to approximately 5°C (41°F) by a refrigeration system. Separation of the vapor and liquid at a low temperature improves hydrogen purity and recovers additional liquid, which would be routed to the stabilizer with the liquid from the low-pressure separator.

In addition, proprietary systems have been developed that even more efficiently recover the liquid product. UOP offers one such system, RECOVERY PLUS,* that improves the recovery of the liquid product at minimum operating cost.

Advantages of CCR Platforming

From both economic and technical standpoints, the CCR Platforming process has significant advantages over the SR Platforming process. The advantages are discussed below.

- The CCR Platforming unit has the highest possible yields because it is capable of the lowest possible pressure operation. If operated at the same conditions, the SR Platforming catalyst is completely deactivated after only a few days of operation. In contrast, the high catalyst coking rate is easily managed in CCR Platforming by continuously regenerating the catalyst. Both the hydrogen and the C_5+ yields are maximized with the CCR Platforming process. The C_5+ yield advantage is illustrated in Fig. 4.1.14, and the hydrogen yield advantage is shown in Fig. 4.1.15.
- Equally important to high yields in the economics of reforming are constant nondeclining yields. Yields decline steadily from the beginning to the end of a cycle in SR Platforming as the catalyst is deactivated by coke deposition. With the CCR Platforming process, the reformate, aromatics, and hydrogen yields remain constant. This result is particularly important for downstream users because inconsistent quality can lead to their products not meeting specifications. The constancy of the yields is achieved by the CCR section, which ensures proper redispersion of the metals and chloride balance to maintain fresh catalyst activity.
- CCR Platforming units have higher on-stream efficiency and are able to handle upset scenarios without long-term shutdown or significant decline in performance. For exam-

*Trademark and/or service mark of UOP.

Downloaded from Digital Engineering Library @ McGraw-Hill (www.digitalengineeringlibrary.com)
Copyright © 2004 The McGraw-Hill Companies. All rights reserved.
Any use is subject to the Terms of Use as given at the website.

UOP PLATFORMING PROCESS

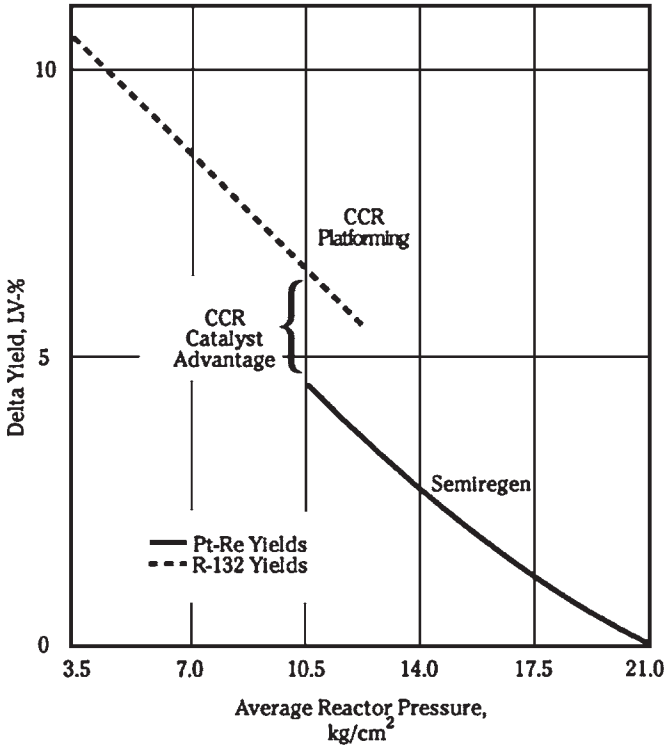

FIGURE 4.1.14 The C_5+ yield at decreasing pressure.

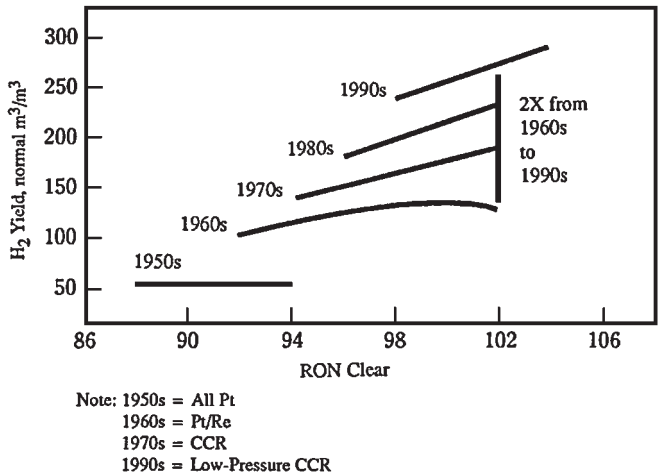

FIGURE 4.1.15 Yield efficiency improvement.

Downloaded from Digital Engineering Library @ McGraw-Hill (www.digitalengineeringlibrary.com)
Copyright © 2004 The McGraw-Hill Companies. All rights reserved.
Any use is subject to the Terms of Use as given at the website.

UOP PLATFORMING PROCESS

ple, a compressor-trip or feed-upset scenario can lead to significant problems with the SR Platforming unit because of increased coke levels, which inevitably shorten catalyst cycle length. However, the continuous regeneration of catalyst in the CCR Platforming unit allows for faster resumption of normal operations. The independent operation of the reactor and catalyst regeneration sections and the robust design of the CCR Platforming unit enable the greater on-stream availability for the CCR Platforming unit. Customer surveys indicate that the average time between planned turnarounds is 3.4 years.

- Since the catalyst is not regenerated in situ, the reactor section operates only in its primary function of providing the catalytic environment for the reforming reactions. It is therefore not exposed to harsh regeneration conditions and is less prone to corrosion and fouling than SR Platforming.

CASE STUDIES

Two cases are presented to compare the SR Platforming and CCR Platforming processes. The unit capacities are the same for the two modes of operation, but the CCR Platforming unit is run at a higher operating severity, giving a research octane number (RONC) of 102 as compared to 97 RONC for SR Platforming. The performance advantage of the CCR Platforming process is clearly demonstrated in the case studies. However, UOP continues to license SR Platforming units because gasoline specifications vary in different regions of the world. Some refiners prefer to build a lower-cost SR Platforming unit to meet current octane requirements. That unit can later be converted to a CCR Platforming unit when higher-octane gasoline, more hydrogen, or higher throughput is needed.

Operating Conditions

Table 4.1.2 shows the relative operating severities for the SR and CCR Platforming units. The CCR Platforming unit operates at higher severity and lower reactor catalyst inventory. In addition, the CCR unit runs continuously compared to 12-month SR Platforming cycle lengths.

Product Yields and Properties

For the operating conditions in Table 4.1.2, Table 4.1.3 clearly shows significant benefits of the CCR Platforming unit over SR. Significantly higher yields of hydrogen, at high puri-

TABLE 4.1.2 Relative Severities of CCR and SR Platforming Units

Operating mode	SR	CCR
Catalyst type	R-56	R-134
Charge rate, MTD (BPSD)	2351 (20,000)	2351 (20,000)
LHSV, h^{-1}	Base	Base × 1.8
H_2/HC	Base	Base × 0.5
RONC	97	102
Reactor pressure, kPa (lb/in^2 gage)	Base (Base)	Base − 1035 (Base − 150)
Separator pressure, kPa (lb/in^2 gage)	Base (Base)	Base − 1000 (Base − 145)
Cycle life, months	12	Continuous

Note: MTD = metric tons per day; BPSD = barrels per stream-day.

Downloaded from Digital Engineering Library @ McGraw-Hill (www.digitalengineeringlibrary.com)
Copyright © 2004 The McGraw-Hill Companies. All rights reserved.
Any use is subject to the Terms of Use as given at the website.

UOP PLATFORMING PROCESS

TABLE 4.1.3 Yield Comparison of CCR and SR Platforming Units

	SR	CCR	Delta
Hydrogen yield, SCFB	1085	1709.0	+624.0
Hydrogen purity, mol %	80	92.6	+12.6
C_5+ yield, LV %	79.3	79.4	+0.1
C_5+ yield, wt %	85.2	88.2	+3
Octane-barrel, 10^6 bbl/yr	513	583	+80
Octane-ton yield, 10^6 MTA	64.9	76.3	+11.4

Note: SCFB = standard cubic feet per barrel; MTA = metric tons per annum. Octane-ton yield = product of the reformate yield, octane, and operating days.

ty, are produced by the CCR. For C_5+ yields, the higher severity of the CCR Platforming unit results in similar liquid volume for the two units. However, the reformate produced by the CCR Platforming unit is more valuable than that produced by the SR Platforming unit. Taking into account both the higher octane value and the increased on-stream efficiency of the CCR Platforming unit, 80 million more octane-barrels, or 11.4 million more metric octane-tons, are produced per year with the CCR Platforming unit than with the SR Platforming unit.

Economics

The estimated erected cost (EEC) for the two units is presented in Table 4.1.4. The EEC is based on fourth-quarter, 1995, U.S. Gulf Coast, inside-battery-limits erection to UOP standards. The EEC for the CCR Platforming unit is higher than that for the SR Platforming unit. The main difference in cost is for the CCR regeneration section. The choice of the Platforming mode of operation depends on capital available and operating severity required. In general, the break point between SR Platforming and CCR Platforming units is an operating severity of 98 RONC. In some regions of the world, 98 RONC or lower severity is sufficient to meet the local gasoline requirements. Many of the new SR Platforming units are built with a reactor stack and with the flexibility to be converted to CCR Platforming units at a later date. Thus, the cost of the CCR section is spread out over a longer period, and the profits made from the SR Platforming operation can be used to finance it.

However, to meet the gasoline restrictions in many regions of the world or to produce aromatics, an operating severity higher than 98 RONC is required. Moreover, for aromatics production, the operating severity is typically 104 to 106 RONC. Therefore, in these cases the CCR Platforming process is the only feasible mode of operation. Typically, the increased yields and octane (that is, more and higher-value product), increased on-stream efficiency, and better operating flexibility quickly pay back the incremental cost difference.

The estimated operating requirements for the two units are presented in Table 4.1.5. These estimates are based on the assumption that the units are operated at 100 percent of design capacity at yearly average conditions.

UOP's design philosophy is to minimize consumption of utilities and maximize energy conservation within economic constraints. The operating requirements of the CCR Platforming unit are higher because of the CCR regenerator, lower-pressure operation, and a more intricate recontacting scheme.

The operating revenues and costs expected for the SR and CCR Platforming units are listed in Table 4.1.6 and summarized in Table 4.1.7. The nomenclature used by UOP fol-

Downloaded from Digital Engineering Library @ McGraw-Hill (www.digitalengineeringlibrary.com)
Copyright © 2004 The McGraw-Hill Companies. All rights reserved.
Any use is subject to the Terms of Use as given at the website.

UOP PLATFORMING PROCESS

TABLE 4.1.4 Estimated Erected Cost

	Cost, million $ U.S.	
	SR	CCR
Estimated erected cost	33	48.3
Catalyst base cost	0.9	1.1
Catalyst Pt cost	2.5	1.5

TABLE 4.1.5 Operating Requirements

	SR	CCR
Electric power, kWh	246	6142
Fuel fired, million kcal (10^6 Btu)	44.1 (175)	55.4 (220)
Cooling water, m^3/h (gal/min)	293 (1290)	534 (2350)
High-pressure steam generated,* MT/h (1000 lb/h)	6.3 (14)	9.5 (21)
Boiler feedwater, MT/h (1000 lb/h)	16.6 (36.5)	2.16 (47.6)
Condensate return,* MT/h (1000 lb/h)	8.6 (19)	11.1 (24.4)

*Net stream, exported unit.
Note: MT/h = metric tons per hour.

TABLE 4.1.6 Operating Economics

	$/day	
	SR	CCR
Product value		
C_5+, SR at $23/bbl and CCR at $24.60/bbl*	358,640*	392,790
H_2, $0.34/lb	38,990	61,585
LPG, $14/bbl	7,155	11,380
Fuel gas, $0.05/lb	30,860	11,220
Total value	435,645	476,975
Total value, million $/yr	145	172
Operating days/yr	333	360
Operating costs		
Feedstock cost, $18.50/bbl	370,000	370,000
Utility costs:		
Electric power, 5 cents/kWh	300	7,370
Fuel fired, $2.10/$10^6$ Btu	8,820	11,090
Cooling water, $0.10/1000 gal	190	340
Boiler feedwater, $0.40/1000 lb	350	460
Condensate return, $0.40/1000 lb	(+)180	(+)235
Steam make, at $3.45/1000 lb	(+)1,140	(+)1,740
Total cost	378,340	387,285
Total cost, million $/yr	126	139

*At 97 and 102 RONC, respectively.

Downloaded from Digital Engineering Library @ McGraw-Hill (www.digitalengineeringlibrary.com)
Copyright © 2004 The McGraw-Hill Companies. All rights reserved.
Any use is subject to the Terms of Use as given at the website.

UOP PLATFORMING PROCESS

TABLE 4.1.7 Economic Summary

Description	SR	CCR
Gross key* product value, million $/yr	120	141
Raw materials† less by-products,‡ million $/yr	98	103
Consumables,§ million $/yr	0.3	0.75
Utilities,† million $/yr	2.8	6.2
Total fixed costs,¶ million $/yr	5.5	6.5
Capital charges, million $/yr	3.5	5.2
Net cost of production, million $/yr	110	122
Pretax profit, million $/yr	10	20
Pretax return on investment, %	30	41
Payout period (gross), yr	1.5	1.3

*The key product is the octane-barrels of reformate.
†Variable costs
‡Defined as the feed cost minus the value of the by-products, which are LPG, hydrogen, and fuel gas.
§Includes catalyst and platinum makeup from attrition and recovery losses.
¶Includes labor, maintenance, overhead, and capital expenses.

TABLE 4.1.8 UOP Nomenclature for Economic Analysis

Term	Definition
Gross margin	A measure of net receipts exclusive of all capital and operating expenses
Variable costs	Manufacturing costs that are directly related to the production rate
Fixed costs	Manufacturing costs that are constant regardless of the production rate
Gross profit	The total net income prior to considering income tax deductions (key product revenue minus cash cost of production)
Capital charges	Depreciation and amortization expenses associated with the capital plant investment
Net cost of production	Total manufacturing costs inclusive of capital charges
Pretax return	Portion of the gross profit that is subject to income taxes; also termed *taxable income*
Pretax return on investment (ROI)	Simplified approximation of the annual percentage of return that can be expected for each dollar invested. Expressed as the ratio of pretax profits to total plant investment; does not consider compounded interest effects

lows standard definitions. For clarification, the definitions for the economic parameters are listed in Table 4.1.8.

The economics shown in Tables 4.1.6 and 4.1.7 are favorable for either mode of operation. Both modes of operation have a payback time of less than 2 years. However, the economics of the CCR Platforming process are superior as a direct result of the differences in operating severity and flexibility of the two modes of operations. The CCR Platforming unit produces more valuable reformate at 102 RONC ($24.60 per barrel) versus the SR Platforming reformate at 97 RONC ($23.00 per barrel). On-stream efficiency of the CCR Platforming unit is 8640 h/yr compared to 8000 h/yr for the SR Platforming unit. Although the CCR Platforming utility costs are higher than those for the SR Platforming unit, these costs are offset by the increase in both product quantity and value, as demonstrated by pretax profit and return on investment.

Downloaded from Digital Engineering Library @ McGraw-Hill (www.digitalengineeringlibrary.com)
Copyright © 2004 The McGraw-Hill Companies. All rights reserved.
Any use is subject to the Terms of Use as given at the website.

UOP PLATFORMING PROCESS

UOP COMMERCIAL EXPERIENCE

UOP has designed more than 730 Platforming (both SR and CCR) units around the world with a total feedstock capacity of more than 9.1 million barrels per stream-day (BPSD). The feedstocks range from benzene-toluene (BT) cuts to full-range, lean Middle East naphthas and rich U.S. and African naphthas and hydrocracked stocks with capacities ranging from 150 to 60,000 BPSD. Research octane numbers run from 93 to 108 over a wide range of catalysts.

The UOP CCR Platforming process is the most successful reforming process offered by any licenser. As of mid-2002, UOP's unparalleled commercial experience includes

- 171 UOP CCR Platforming units operating around the world
- 52 units operating at state-of-the-art reactor pressure of 75 lb/in^2 gage
- 82 units operating at or below 100 lb/in^2 gage reactor pressure
- 4,000,000 BPSD CCR Platforming unit operating capacity
- 99.5% of all CCR Platforming units ever started up still operating
- 31 more UOP CCR Platforming units in design and construction

RZ PLATFORMING

RZ Platforming is the latest development in UOP's long tradition of reforming process improvements. The process is built around a new type of catalyst called RZ-100. RZ-100 is a zeolitic catalyst, activated with platinum, that gives the highest obtainable yields of benzene (B) and toluene (T) from naphtha feedstocks. The RZ process is ideally suited for use in aromatics production facilities especially when large amounts of benzene are required. The ability of the RZ Platforming process to convert light, paraffinic feeds and its flexibility in processing straight-run naphtha fractions provide many options for improving aromatics production and supplying highly desired hydrogen.

Chemistry and Catalyst

The function of the BT reformer is to efficiently convert paraffins and naphthenes to aromatics with as little naphthene ring opening or paraffin cracking as possible. The cracking reactions lead to the production of undesirable light gas products at the expense of BT yields and hydrogen.

The RZ-100 catalyst differs greatly in the production of aromatics from conventional reforming catalyst. The selectivities of RZ Platforming for toluene and benzene are approximately factors of 2 and 4 greater, respectively, than previous state-of-the-art reforming catalysts. Figure 4.1.16 illustrates the differences for aromatic yields as a function of the feed paraffin carbon number.

The RZ-100 catalyst selectivity to BT is achieved through platinum-catalyzed cyclization of paraffins in contrast to the predominantly acid-catalyzed route in conventional reforming. The absence of acid sites allows the RZ-100 catalyst to form aromatics without producing significant light by-products through cracking.

Though significantly different in reaction mechanism and aromatic selectively, the RZ-100 catalyst is operated in a similar fashion to conventional fixed-bed reforming catalysts. The extruded catalyst is operated with cycle lengths of 6 months to 1 year. During the

Downloaded from Digital Engineering Library @ McGraw-Hill (www.digitalengineeringlibrary.com)
Copyright © 2004 The McGraw-Hill Companies. All rights reserved.
Any use is subject to the Terms of Use as given at the website.

UOP PLATFORMING PROCESS

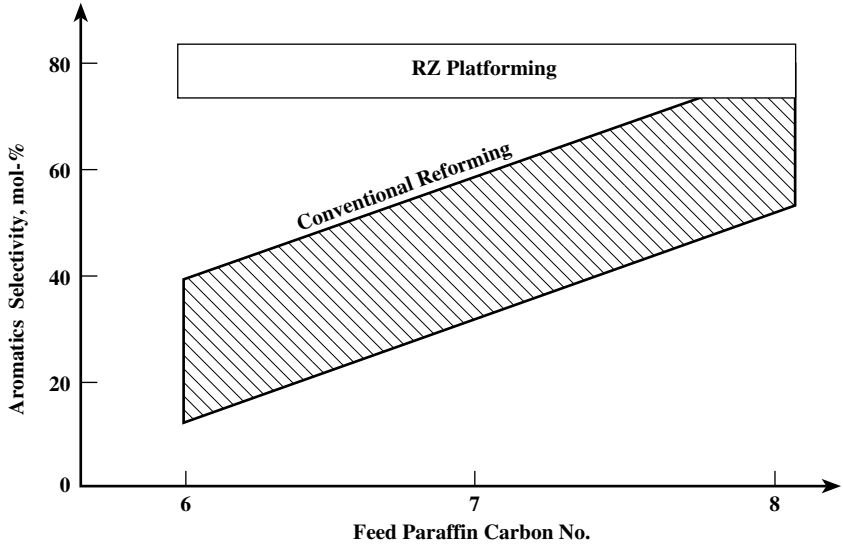

FIGURE 4.1.16 Aromatic yield differences of RZ versus conventional Platforming.

cycle, the temperature is increased to maintain BT production as the catalyst is deactivating. Cycle lengths are determined when temperature limits are reached or when a shutdown of other operating units in the refinery provides a convenient opportunity for RZ-100 catalyst regeneration. Once it is regenerated, the catalyst performance is identical to that of the previous cycle.

Process Description

The RZ Platforming process is similar in configuration to other Platforming processes; however, the greater conversion of C_6 and C_7 hydrocarbons translates to higher heats of reaction. If maximum yields of B and T are desired, a five-reactor system is usually employed. A simplified flow schematic is shown in Fig. 4.1.17. Treated naphtha feed is combined with recycled hydrogen gas and heat exchanged against reactor effluent. The combined feed is then raised to reaction temperature in the charge heater and sent to the reactor section. Adiabatic, radial-flow reactors are arranged in a conventional side-by-side pattern. The predominant reactions are endothermic so an interheater is used between each reactor to reheat the charge to the reaction temperature. Flue gas from the fired heaters is typically used to generate high-pressure steam, but other heat integration options are available. The effluent from the last reactor is heat-exchanged against the combined feed, cooled, and phase-split into vapor and liquid products in a separator. The vapor phase is rich in hydrogen gas, and a portion of the gas is compressed and recycled to the reactors. The net hydrogen-rich gas is compressed and charged together with the separator liquid phase to the product recovery section. The liquid product from the recovery section is sent to a stabilizer where light saturates are removed from the C_6+ aromatic product. Since zeolite reforming catalysts are more sensitive to sulfur poisoning than conventional Platforming catalyst, a sulfur scavenger system is used to maintain the sulfur concentration below 0.1 ppm.

Downloaded from Digital Engineering Library @ McGraw-Hill (www.digitalengineeringlibrary.com)
Copyright © 2004 The McGraw-Hill Companies. All rights reserved.
Any use is subject to the Terms of Use as given at the website.

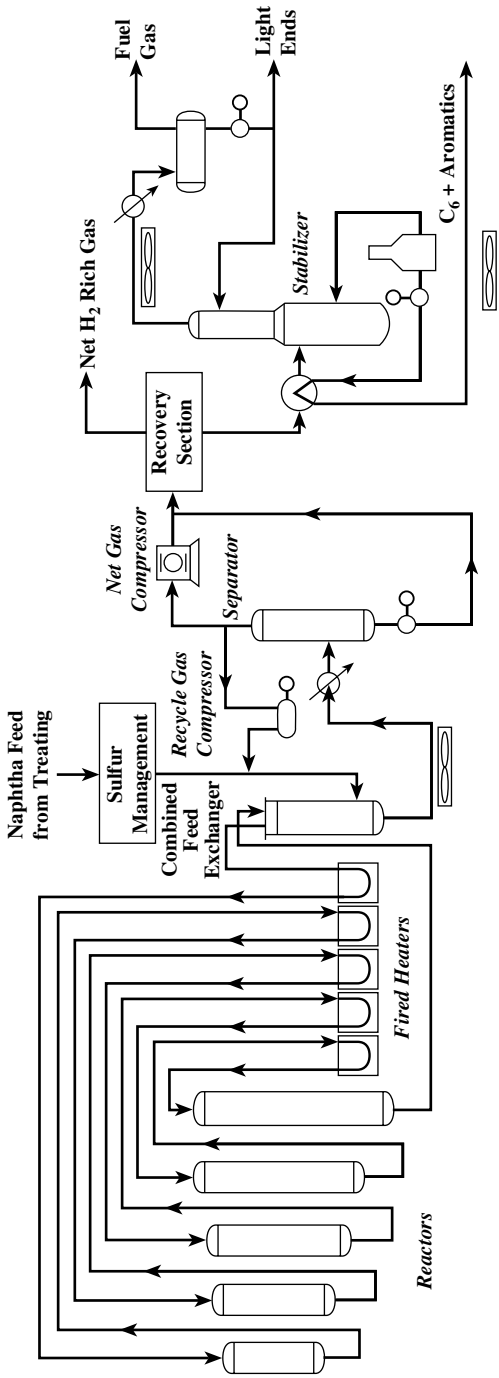

FIGURE 4.1.17 RZ Platforming unit flow diagram.

Downloaded from Digital Engineering Library @ McGraw-Hill (www.digitalengineeringlibrary.com)
Copyright © 2004 The McGraw-Hill Companies. All rights reserved.
Any use is subject to the Terms of Use as given at the website.

UOP PLATFORMING PROCESS

The RZ-100 catalyst deactivates over time at reaction conditions and needs to be regenerated. The typical cycle lengths are 8 to 12 months. The catalyst system is designed to be regenerated ex situ.

Process Performance

Although CCR Platforming is the most efficient process for producing xylenes (X) from heavier naphtha fractions, the conversion of C_6 and C_7 paraffins to aromatics is normally below 50 percent, even at low pressure. The RZ-100 catalyst offers high aromatic selectivity even when processing the most difficult C_6 and C_7 paraffin feed components.

The selectivity and yield advantages of the RZ-100 catalyst can be demonstrated by examining pilot-plant data using a raffinate feed consisting primarily of C_6 and C_7 paraffins. The pilot-plant feed LHSV and pressure were held constant while the reactor temperature was varied to obtain a wide range of paraffin conversion. Figure 4.1.18 shows that the RZ-100 catalyst produced up to 25 wt % more aromatics at a given paraffin conversion. Since more of the light paraffins were selectively converted to aromatics, less hydrogen was consumed for other reactions such as cracking. For the pilot-plant tests, the hydrogen yield for the RZ-100 catalyst was about double that of the CCR Platforming catalyst.

Feedstocks

Feedstocks to the RZ Platforming unit can range from extraction unit raffinate to BTX naphtha. A very effective application for the RZ-100 catalyst is the production of aromatics and hydrogen from light, paraffin feeds, such as a BT raffinate. The RZ-100 catalyst can also be used in parallel with a second reforming unit (semiregenerative or CCR unit) to optimize the production of the desired aromatics by processing different fractions of the hydrotreated feed. In such cases, the conventional reformer can be dedicated to processing

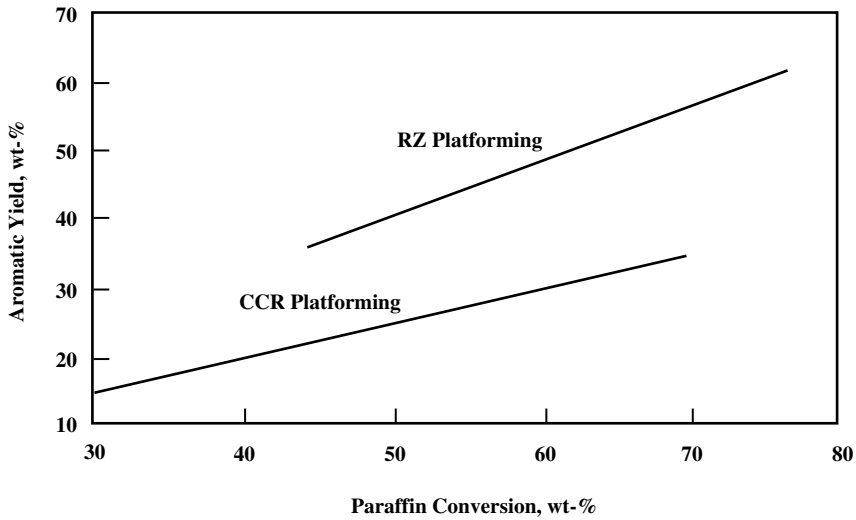

FIGURE 4.1.18 Aromatic yields from raffinate.

Downloaded from Digital Engineering Library @ McGraw-Hill (www.digitalengineeringlibrary.com)
Copyright © 2004 The McGraw-Hill Companies. All rights reserved.
Any use is subject to the Terms of Use as given at the website.

UOP PLATFORMING PROCESS

the heavier feed fraction, taking advantage of its superior ability to produce xylenes. The light naphtha, which is rich in C_6 and C_7 components, can be routed to the RZ Platforming unit, where selectivity for converting light paraffins to benzene and toluene is greatest. A yield comparison for light naphtha is shown in Fig. 4.1.19.

Aromatics Complex Applications

Modern petrochemical complexes produce a wide range of aromatic products including benzene, toluene, ethyl benzene, xylene isomers, and various higher-boiling aromatic components. Feedstock for these plants is traditionally a naphtha distilled to produce 6 through 11 carbon numbered species. The naphtha is fed to a high-severity reformer (CCR) where the aromatic compounds are formed. When higher yields of aromatics, especially benzene, are desired from an aromatic complex, RZ Platforming can be used, as shown in Fig. 4.1.20. The normal feed naphtha is first distilled in a prefractionator to form a C_6-C_7-based material as feed to the RZ Platformer and a C_8+ material as feed to the conventional high-severity reformer. Deployed in this manner, each catalyst processes its optimum feedstock. Table 4.1.9 compares the overall yields from an aromatics complex with and without RZ-100 while processing a conventional naphtha. In addition, the aromatics complex producer has the option of recycling extraction raffinate to the RZ Platformer to obtain additional aromatic yields.

Economics

A summary of investment cost and utility consumption is given in Table 4.1.10 for an 860,000-MTA (20,000-BPD) RZ Platformer operating on a light naphtha feed to produce benzene and toluene as a feedstock to an aromatics complex.

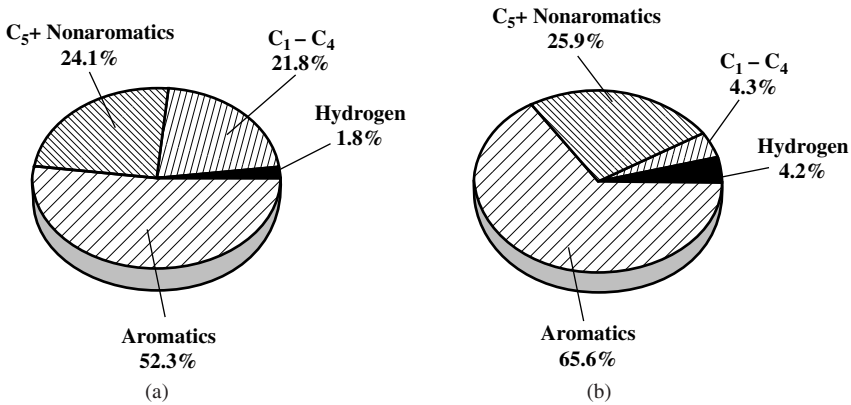

FIGURE 4.1.19 Yield differences for light naphtha feed. (*a*) Conventional semiregenerative; (*b*) RZ Platforming.

Downloaded from Digital Engineering Library @ McGraw-Hill (www.digitalengineeringlibrary.com)
Copyright © 2004 The McGraw-Hill Companies. All rights reserved.
Any use is subject to the Terms of Use as given at the website.

UOP PLATFORMING PROCESS

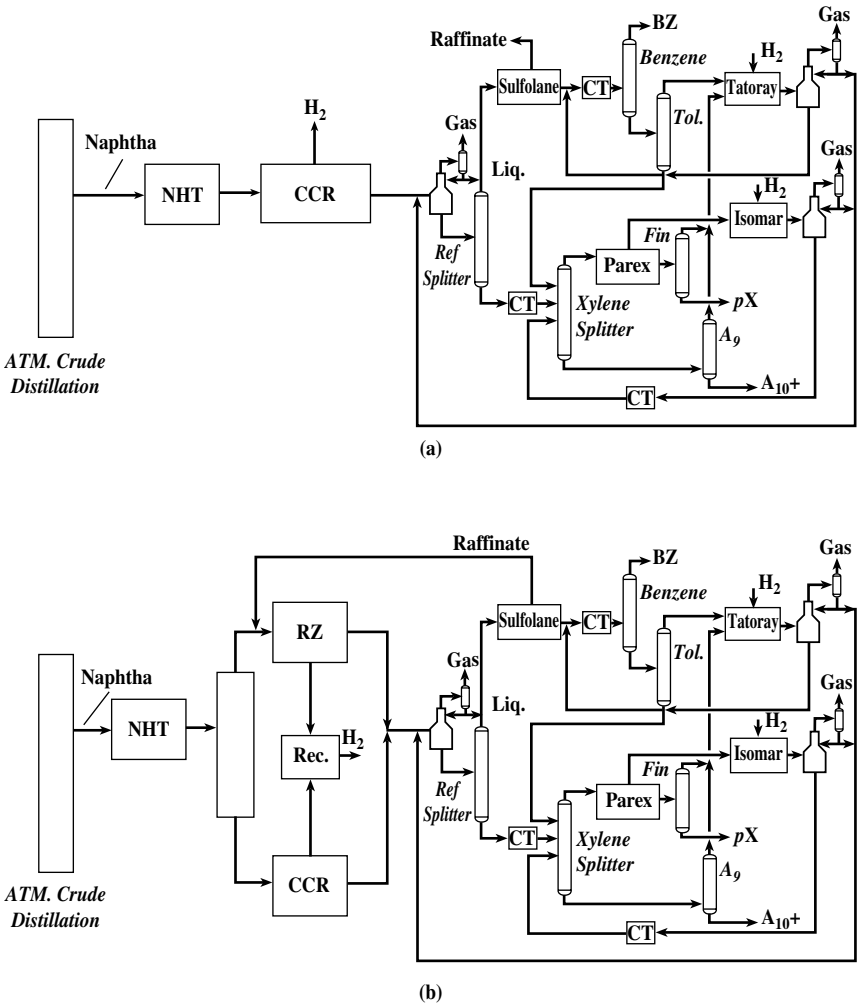

FIGURE 4.1.20 Use of CCR and RZ Platforming units. (*a*) CCR case; (*b*) split-flow case.

TABLE 4.1.9 Overall Yield Comparison, wt %

	Conventional CCR platformer	Split-flow RZ Platformer
Hydrogen	2.91	4.46
Gas	12.23	14.31
LPG	8.68	5.80
Raffinate	15.24	0.00
Benzene	15.93	29.38
Para-Xylene	38.82	39.93
Heavies	6.07	6.13
Naphtha	100.00	100.00

Downloaded from Digital Engineering Library @ McGraw-Hill (www.digitalengineeringlibrary.com)
Copyright © 2004 The McGraw-Hill Companies. All rights reserved.
Any use is subject to the Terms of Use as given at the website.

UOP PLATFORMING PROCESS

TABLE 4.1.10 Economics for RZ Platformer

Estimated ISBL cost, million $ U.S.	46.2
Utilities	
Electric power, kW	6500
Fuel fired, 10^6 kcal/h	82
Cooling water, m^3/h	700
Exported high-pressure steam, MT/h	5
Imported medium-pressure steam, MT/h	20
Imported boiler feedwater, MT/h	28
Exported condensate, MT/h	43

Commercial Experience

The first UOP RZ Platforming unit was brought on-stream in August 1998. The RZ-100 catalyst system performance continues to meet all expectations of activity, selectivity, and stability. The RZ Platforming process is backed by the commercial experience of the full range of UOP Platforming catalyst systems.

Downloaded from Digital Engineering Library @ McGraw-Hill (www.digitalengineeringlibrary.com)
Copyright © 2004 The McGraw-Hill Companies. All rights reserved.
Any use is subject to the Terms of Use as given at the website.

Downloaded from Digital Engineering Library @ McGraw-Hill (www.digitalengineeringlibrary.com)
Copyright © 2004 The McGraw-Hill Companies. All rights reserved.
Any use is subject to the Terms of Use as given at the website.

Source: HANDBOOK OF PETROLEUM REFINING PROCESSES

P · A · R · T · 5

DEHYDROGENATION

Downloaded from Digital Engineering Library @ McGraw-Hill (www.digitalengineeringlibrary.com)
Copyright © 2004 The McGraw-Hill Companies. All rights reserved.
Any use is subject to the Terms of Use as given at the website.

Downloaded from Digital Engineering Library @ McGraw-Hill (www.digitalengineeringlibrary.com)
Copyright © 2004 The McGraw-Hill Companies. All rights reserved.
Any use is subject to the Terms of Use as given at the website.

Source: HANDBOOK OF PETROLEUM REFINING PROCESSES

CHAPTER 5.1
UOP OLEFLEX PROCESS FOR LIGHT OLEFIN PRODUCTION

Joseph Gregor and Daniel Wei
UOP LLC
Des Plaines, Illinois

INTRODUCTION

The UOP* Oleflex* process is catalytic dehydrogenation technology for the production of light olefins from their corresponding paraffin. An Oleflex unit can dehydrogenate propane, isobutane, normal butane, or isopentane feedstocks separately or as mixtures spanning two consecutive carbon numbers. This process was commercialized in 1990, and by 2002 more than 1,250,000 metric tons per year (MTA) of propylene and more than 2,800,000 MTA of isobutylene were produced from Oleflex units located throughout the world.

PROCESS DESCRIPTION

The UOP Oleflex process is best described by separating the technology into three different sections:

- Reactor section
- Product recovery section
- Catalyst regeneration section

Reactor Section

Hydrocarbon feed is mixed with hydrogen-rich recycle gas (Fig. 5.1.1). This combined feed is heated to the desired reactor inlet temperature and converted at high monoolefin selectivity in the reactors.

*Trademark and/or service mark of UOP.

Downloaded from Digital Engineering Library @ McGraw-Hill (www.digitalengineeringlibrary.com)
Copyright © 2004 The McGraw-Hill Companies. All rights reserved.
Any use is subject to the Terms of Use as given at the website.

UOP OLEFLEX PROCESS FOR LIGHT OLEFIN PRODUCTION

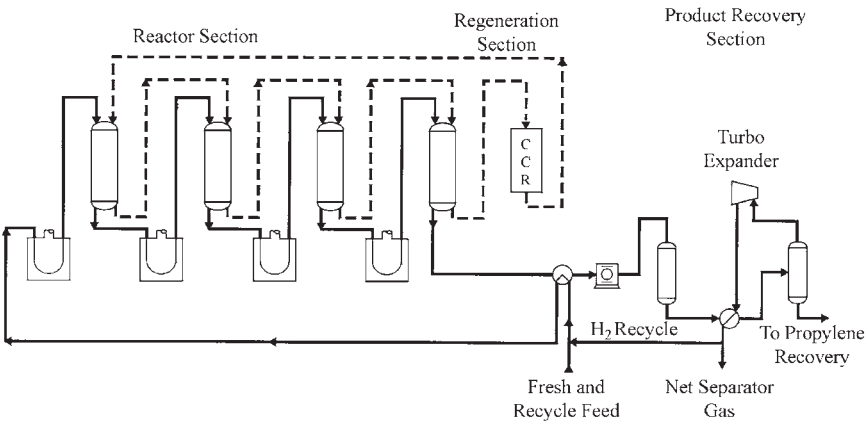

FIGURE 5.1.1 Oleflex process flow.

The reactor section consists of several radial-flow reactors, charge and interstage heaters, and a reactor feed-effluent heat exchanger. The diagram shows a unit with four reactors, which would be typical for a unit processing propane feed. Three reactors are used for butane or isopentane dehydrogenation. Three reactors are also used for blends of C_3-C_4 or C_4-C_5 feeds.

Because the reaction is endothermic, conversion is maintained by supplying heat through interstage heaters. The effluent leaves the last reactor, exchanges heat with the combined feed, and is sent to the product recovery section.

Product Recovery Section

A simplified product recovery section is also shown in Fig. 5.1.1. The reactor effluent is cooled, compressed, dried, and sent to a cryogenic separation system. The dryers serve two functions: (1) to remove trace amounts of water formed from the catalyst regeneration and (2) to remove hydrogen sulfide. The treated effluent is partially condensed in the cold separation system and directed to a separator.

Two products come from the Oleflex product recovery section: separator gas and separator liquid. The gas from the cold high-pressure separator is expanded and divided into two streams: recycle gas and net gas. The net gas is recovered at 90 to 93 mol % hydrogen purity. The impurities in the hydrogen product consist primarily of methane and ethane. The separator liquid, which consists primarily of the olefin product and unconverted paraffin, is sent downstream for processing.

Catalyst Regeneration Section

The regeneration section, shown in Fig. 5.1.2, is similar to the CCR* unit used in the UOP Platforming* process. The CCR unit performs four functions:

- Burns the coke off the catalyst
- Redistributes the platinum

*Trademark and/or service mark of UOP.

Downloaded from Digital Engineering Library @ McGraw-Hill (www.digitalengineeringlibrary.com)
Copyright © 2004 The McGraw-Hill Companies. All rights reserved.
Any use is subject to the Terms of Use as given at the website.

UOP OLEFLEX PROCESS FOR LIGHT OLEFIN PRODUCTION

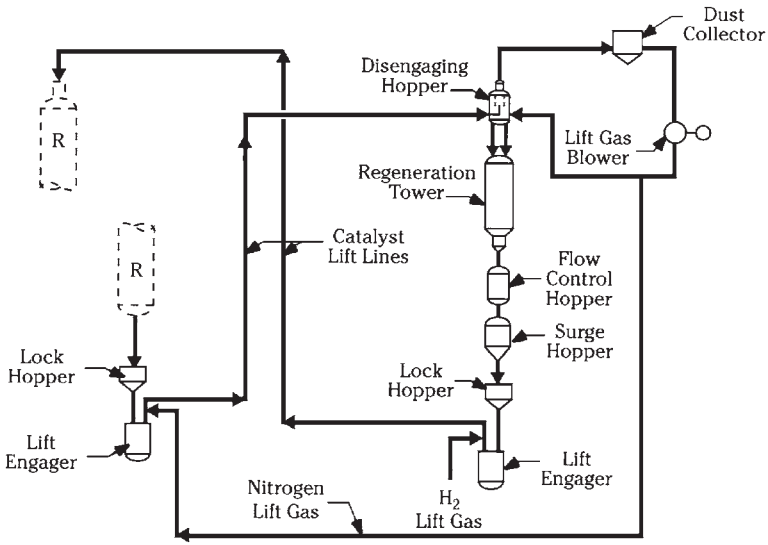

FIGURE 5.1.2 Oleflex regeneration section.

- Removes the excess moisture
- Reduces the catalyst prior to returning to the reactors

The slowly moving bed of catalyst circulates in a loop through the reactors and the regenerator. The cycle time around the loop can be adjusted within broad limits but is typically anywhere from 5 to 10 days, depending on the severity of the Oleflex operation and the need for regeneration. The regeneration section can be stored for a time without interrupting the catalytic dehydrogenation process in the reactor and recovery sections.

DEHYDROGENATION PLANTS

Propylene Plant

Oleflex process units typically operate in conjunction with fractionators and other process units within a production plant. In a propylene plant (Figure 5.1.3), a propane-rich liquefied petroleum gas (LPG) feedstock is sent to a depropanizer to reject butanes and heavier hydrocarbons. The depropanizer overhead is then directed to the Oleflex unit. The once-through conversion of propane is approximately 40 percent, which closely approaches the equilibrium value defined by the Oleflex process conditions. Approximately 90 percent of the propane conversion reactions are selective to propylene and hydrogen; the result is a propylene mass selectivity in excess of 85 wt %. Two product streams are created within the C_3 Oleflex unit: a hydrogen-rich vapor product and a liquid product rich in propane and propylene.

Trace levels of methyl acetylene and propadiene are removed from the Oleflex liquid product by selective hydrogenation. The selective diolefin and acetylene hydrogenation step is accomplished with the Hüls SHP process, which is available for license through UOP. The SHP process selectively saturates diolefins and acetylenes to monoolefins

Downloaded from Digital Engineering Library @ McGraw-Hill (www.digitalengineeringlibrary.com)
Copyright © 2004 The McGraw-Hill Companies. All rights reserved.
Any use is subject to the Terms of Use as given at the website.

UOP OLEFLEX PROCESS FOR LIGHT OLEFIN PRODUCTION

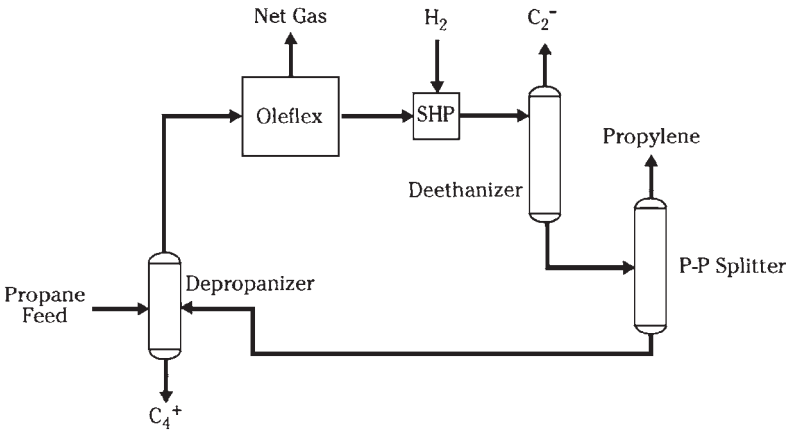

FIGURE 5.1.3 C_3 Oleflex plant.

without saturating propylene. The process consists of a single liquid-phase reactor. The diolefins plus acetylene content of the propylene product is less than 5 wt ppm.

Ethane and lighter material enter the propylene plant in the fresh feed and are also created by nonselective reactions within the Oleflex unit. These light ends are rejected from the complex by a deethanizer column. The deethanizer bottoms are then directed to a propane-propylene (P-P) splitter. The splitter produces high-purity propylene as the overhead product. Typical propylene purity ranges between 99.5 and 99.8 wt %. Unconverted propane from the Oleflex unit concentrates in the splitter bottoms and is returned to the depropanizer for recycle to the Oleflex unit.

Ether Complex

A typical etherification complex configuration is shown in Fig. 5.1.4 for the production of methyl tertiary butyl ether (MTBE) from butanes and methanol. Ethanol can be substituted for methanol to make ethyl tertiary butyl ether (ETBE) with the same process configuration. Furthermore, isopentane may be used in addition to or instead of field butanes to make tertiary amyl methyl ether (TAME) or tertiary amyl ethyl ether (TAEE). The complex configuration for a C_5 dehydrogenation complex varies according to the feedstock composition and processing objectives.

Three primary catalytic processes are used in an MTBE complex:

- Paraffin isomerization to convert normal butane into isobutane
- Dehydrogenation to convert isobutane into isobutylene
- Etherification to react isobutylene with methanol to make MTBE

Field butanes, a mixture of normal butane and isobutane obtained from natural gas condensate, are fed to a deisobutanizer (DIB) column. The DIB column prepares an isobutane overhead product, rejects any pentane or heavier material in the DIB bottoms, and makes a normal butane sidecut for feed to the paraffin isomerization unit.

The DIB overhead is directed to the Oleflex unit. The once-through conversion of isobutane is approximately 50 percent. About 91 percent of the isobutane conversion reactions are selective to isobutylene and hydrogen. On a mass basis, the isobutylene selectivity

Downloaded from Digital Engineering Library @ McGraw-Hill (www.digitalengineeringlibrary.com)
Copyright © 2004 The McGraw-Hill Companies. All rights reserved.
Any use is subject to the Terms of Use as given at the website.

UOP OLEFLEX PROCESS FOR LIGHT OLEFIN PRODUCTION

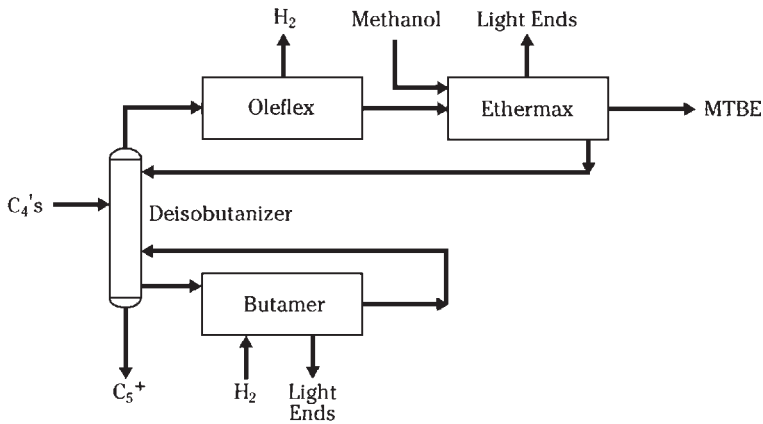

FIGURE 5.1.4 MTBE production facility.

is 88 wt %. Two product streams are created within the C_4 Oleflex unit: a hydrogen-rich vapor product and a liquid product rich in isobutane and isobutylene.

The C_4 Oleflex liquid product is sent to an etherification unit, where methanol reacts with isobutylene to make MTBE. Isobutylene conversion is greater than 99 percent, and the MTBE selectivity is greater than 99.5 percent. Raffinate from the etherification unit is depropanized to remove propane and lighter material. The depropanizer bottoms are then dried, saturated, and returned to the DIB column.

PROPYLENE PRODUCTION ECONOMICS

A plant producing 350,000 MTA of propylene is chosen to illustrate process economics. Given the more favorable C_4 and C_5 olefin equilibrium, butylene and amylene production costs are lower per unit of olefin when adjusted for any differential in feedstock value. The basis used for economic calculations is shown in Table 5.1.1. This basis is typical for U.S. Gulf Coast prices prevailing in mid-2002 and can be used to show that the pretax return on investment for such a plant is approximately 24 percent.

Material Balance

The LPG feedstock is the largest cost component of propylene production. The quantity of propane consumed per unit of propylene product is primarily determined by the selectivity of the Oleflex unit because fractionation losses throughout the propylene plant are small. The Oleflex selectivity to propylene is 90 mol % (85 wt %), and the production of 1.0 metric ton (MT) of propylene requires approximately 1.2 MT of propane.

An overall mass balance for the production of polymer-grade propylene from C_3 LPG is shown in Table 5.1.2 for a polymer-grade propylene plant producing 350,000 MTA, based on 8000 operating hours per year. The fresh LPG feedstock is assumed to be 94 LV % propane with 3 LV % ethane and 3 LV % butane. The native ethane in the feed is rejected in the deethanizer along with light ends produced in the Oleflex unit and used as process fuel. The butanes are rejected from the depropanizer bottoms. This small butane-rich

Downloaded from Digital Engineering Library @ McGraw-Hill (www.digitalengineeringlibrary.com)
Copyright © 2004 The McGraw-Hill Companies. All rights reserved.
Any use is subject to the Terms of Use as given at the website.

UOP OLEFLEX PROCESS FOR LIGHT OLEFIN PRODUCTION

TABLE 5.1.1 Utility, Feed, and Product Valuations for Economic Calculations

Utility values		
Fuel gas	\$2.80/million Btu	\$11.10/million kcal
Boiler feed water	\$0.45/klb	\$1.00/MT
Cooling water	\$0.12/kgal	\$0.03/m^3
Electric power	\$0.05/kWh	\$0.05/kWh
Feed and product values		
C_3 LPG (94 LU % propane)	\$0.35/gal	\$180/MT
Propylene (99.5 wt %)	\$0.19/lb	\$420/MT

Note: MT = metric tons; SCF = standard cubic feet.

TABLE 5.1.2 Material Balance for a 350,000-MTA Propylene Plant

	Flow rate, MT/h	Flow rate, MTA
Feed:		
C_3 LPG (94 LV % propane)	55.00	440,000
Products:		
Propylene (99.5 wt %)	43.75	350,000
Fuel by-products	11.25	90,000
Total products	55.00	440,000

Note: MT/h = metric tons per hour; MTA = metric tons per annum.

stream could be used as either a by-product or as fuel. In this example, the depropanizer bottoms were used as fuel within the plant.

The Oleflex process coproduces high-quality hydrogen. Project economics benefit when a hydrogen consumer is available in the vicinity of the propylene plant. If chemical hydrogen cannot be exported, then hydrogen is used as process fuel. This evaluation assumes that hydrogen is used as fuel within the plant.

Utility Requirements

Utility requirements for a plant producing 350,000 MTA of propylene are summarized in Table 5.1.3. These estimates are based on the use of an extracting steam turbine to drive the Oleflex reactor effluent compressor. A water-cooled surface condenser is used on the steam turbine exhaust. A condensing steam driver was chosen in this example for the propane-propylene splitter heat-pump compressor.

Propylene Production Costs

Representative costs for producing 350,000 MTA of polymer-grade propylene using the Oleflex process are shown in Table 5.1.4. These costs are based on feed and product

Downloaded from Digital Engineering Library @ McGraw-Hill (www.digitalengineeringlibrary.com)
Copyright © 2004 The McGraw-Hill Companies. All rights reserved.
Any use is subject to the Terms of Use as given at the website.

UOP OLEFLEX PROCESS FOR LIGHT OLEFIN PRODUCTION

TABLE 5.1.3 Net Utility Requirements for a 350,000-MTA Propylene Plant

Utility requirements	Consumption	Utility cost $/h	Utility cost $/MTA C_3
Electric power	6,500 kW	325	7.43
Boiler feed water	10 MT/h	10	0.23
Cooling water	6,000 m^3/h	180	4.11
Fuel gas	(13.1 million kcal/h)	145	3.31
Net utilities			15.08

Note: MTA = metric tons per annum; MT/h = metric tons per hour.

TABLE 5.1.4 Cost for Producing 350,000 MTA of Polymer-Grade Propylene Using the Oleflex Process

	Revenues, million $/year	Costs million $/year	Costs $/MT C_3
Propylene product	147.0	—	—
Propane feedstock	—	79.2	226.3
Net utilities	—	5.3	15.1
Catalyst and chemicals	—	3.8	10.9
Fixed expenses	—	7.0	20.0
Total	147.0	95.3	272.3

Note: MTA = metric tons per annum; MT = metric tons.

values defined in Table 5.1.1. The fixed expenses in Table 5.1.4 consist of estimated labor costs and maintenance costs and include an allowance for local taxes, insurance, and interest on working capital.

Capital Requirements

The ISBL erected cost for an Oleflex unit producing 350,000 MTA of polymer-grade propylene is approximately $145 million (U.S. Gulf Coast, mid-2002 erected cost). This figure includes the reactor and product recovery sections, a modular CCR unit, a Hüls SHP unit, and a fractionation section consisting of a depropanizer, deethanizer, and heat-pumped P-P splitter. The costs are based on an extracting steam turbine driver for the reactor effluent compressor and a steam-driven heat pump. Capital costs are highly dependent on many factors, such as location, cost of labor, and the relative workload of equipment suppliers.

Total project costs include ISBL and OSBL erected costs and all owner's costs. This example assumes an inclusive mid-2002 total project cost of $215 million including:

- ISBL erected costs for all process units
- OSBL erected costs (off-site utilities, tankage, laboratory, warehouse, for example)
- Initial catalyst and absorbant loadings

Downloaded from Digital Engineering Library @ McGraw-Hill (www.digitalengineeringlibrary.com)
Copyright © 2004 The McGraw-Hill Companies. All rights reserved.
Any use is subject to the Terms of Use as given at the website.

UOP OLEFLEX PROCESS FOR LIGHT OLEFIN PRODUCTION

- Technology fees
- Project development including site procurement and preparation

Overall Economics

Because the feedstock represents such a large portion of the total production cost, the economics for the Oleflex process are largely dependent on the price differential between propane and propylene. Assuming the values of $180/MT for propane and $420/MT for propylene, or a differential price of $240/MT, the pretax return on investment is approximately 24 percent for a plant producing 350,000 MTA of propylene.

Downloaded from Digital Engineering Library @ McGraw-Hill (www.digitalengineeringlibrary.com)
Copyright © 2004 The McGraw-Hill Companies. All rights reserved.
Any use is subject to the Terms of Use as given at the website.

Source: HANDBOOK OF PETROLEUM REFINING PROCESSES

CHAPTER 5.2
UOP PACOL DEHYDROGENATION PROCESS

Peter R. Pujadó
UOP LLC
Des Plaines, Illinois

INTRODUCTION

Paraffins can be selectively dehydrogenated to the corresponding monoolefins by using suitable dehydrogenation catalysts. Iron catalysts have long been used for the dehydrogenation of ethylbenzene to styrene, and catalysts made of chromia (chrome oxide) supported on alumina have long been used for the dehydrogenation of light paraffins (for example, *n*-butane to *n*-butene) and the deeper dehydrogenation of olefins to diolefins (for example, *n*-butene to 1,3-butadiene). However, newer commercial processes for the dehydrogenation of light and heavy paraffins are based on the use of noble-metal catalysts because of the superior stability and selectivity of these catalyst systems.

In the late 1940s and through the 1950s, the pioneering work done at UOP* by Vladimir Haensel on platinum catalysis for the catalytic reforming of naphthas for the production of high-octane gasolines and high-purity aromatics showed that platinum catalysts have interesting dehydrogenation functions. This research area was later pursued by Herman Bloch and others also within UOP. In 1963-64, UOP started development work on heterogeneous platinum catalysts supported on an alumina base for the dehydrogenation of heavy *n*-paraffins. The resulting successful process, known as the Pacol* process (for paraffin conversion to olefins), was first commercialized in 1968. The advent of the UOP Pacol process marked a substantial transformation in the detergent industry and contributed to the widespread use of linear alkylbenzene sulfonate (LAS or LABS) on an economical, cost-effective basis. As of mid-2003, more than 40 Pacol units have been built, or are under design or construction; practically all new linear alkylbenzene (LAB) capacity built on a worldwide basis over the last two decades makes use of UOP's Pacol catalytic dehydrogenation process.

Maintaining technological superiority over some 30-odd years requires continued innovation and improvement, principally of the dehydrogenation catalyst, the reactor design, and operating conditions because these have the greatest impact on the overall process economics. The first commercial Pacol dehydrogenation catalysts, denoted DeH-3 and DeH-

*Trademark and/or service mark of UOP.

Downloaded from Digital Engineering Library @ McGraw-Hill (www.digitalengineeringlibrary.com)
Copyright © 2004 The McGraw-Hill Companies. All rights reserved.
Any use is subject to the Terms of Use as given at the website.

UOP PACOL DEHYDROGENATION PROCESS

4, came on-stream in the mid-1960s. They were soon superseded by a newer catalyst, DeH-5, that was commercialized in 1971 and dominated the market for several years. In 1983, DeH-7 catalyst was introduced. This new catalyst exhibited about 1.75 times the stability of its predecessor, DeH-5, and soon replaced it as the dominant Pacol catalyst. Development efforts continued, and in 1998, DeH-11 was commercialized. This catalyst is the first "layered sphere" catalyst to be offered by UOP in which a thin reactive layer is coated onto an inert one. The result is an advantage in selectivity to mono-olefins. In 2001 DeH-201 was introduced. This catalyst, also a layered sphere, allows for higher conversion operation than previous Pacol catalysts. All these various generations of paraffin dehydrogenation catalysts have resulted in improved yields at higher conversion and higher operating severities, thus allowing for smaller and more economical units for a given production capacity.

Since 1980, UOP has adapted similar catalysts to the selective catalytic dehydrogenation of light olefins (propane to propylene and isobutane to isobutylene) in the Oleflex* process; a number of large-capacity units have been built for this application. Because of the higher severity, light paraffin dehydrogenation units make use of UOP's proprietary CCR* continuous catalyst regeneration technology, which was originally developed and commercialized for the catalytic reforming of naphthas at high severity. Because the Pacol process operates at a lower severity, catalyst runs are significantly longer, and CCR technology is not needed.

PROCESS DESCRIPTION

The catalytic reaction pathways found in the dehydrogenation of *n*-paraffins to *n*-monoolefins [linear internal olefins (LIO)] in addition to other thermal cracking reactions are illustrated in Fig. 5.2.1. A selective catalyst is required if only LIO is to be the main product.

In the Pacol reaction mechanism, the conversion of *n*-paraffins to monoolefins is near equilibrium, and therefore a small but significant amount of diolefins and aromatics is produced. In the alkylation process, the diolefins consume 2 moles of benzene to yield heavier diphenylalkane compounds or form heavier polymers that become part of the heavy alkylate and the bottoms by-products of the hydrofluoric (HF) acid regenerator. Thus,

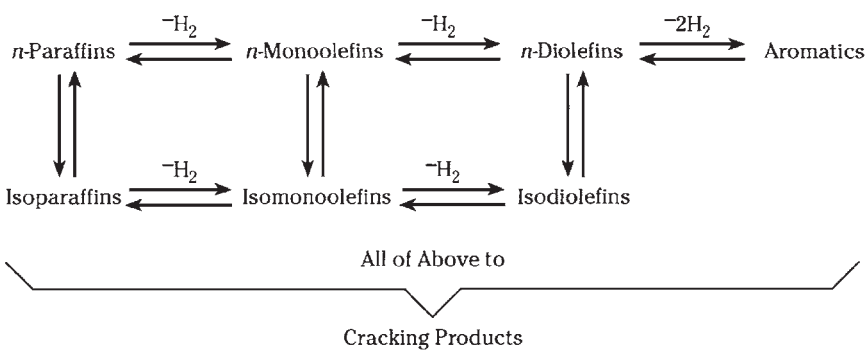

FIGURE 5.2.1 Dehydrogenation reaction pathways.

*Trademark and/or service mark of UOP.

Downloaded from Digital Engineering Library @ McGraw-Hill (www.digitalengineeringlibrary.com)
Copyright © 2004 The McGraw-Hill Companies. All rights reserved.
Any use is subject to the Terms of Use as given at the website.

UOP PACOL DEHYDROGENATION PROCESS

diolefin formation represents a net loss of alkylate yield. In 1984, UOP developed the DeFine* process, a highly selective catalytic hydrogenation process to convert diolefins back to monoolefins. Detergent complexes licensed prior to 1986 included only Pacol and HF Detergent Alkylate* units. The first DeFine unit came on-stream during the fourth quarter of 1986; all subsequent Pacol process units have also incorporated DeFine hydrogenation reactors, and DeFine reactors have also been retrofitted into a growing number of existing older Pacol units. Both Pacol and DeFine processes are also used in the latest process developed and commercialized by UOP, the Detal* process, for the production of LAB using a heterogeneous solid catalyst instead of the older, traditional HF acid catalyst.

The dehydrogenation of *n*-paraffins is an endothermic reaction with a heat of reaction of about 125 kJ/g · mol (30 kcal/g · mol; 54,000 Btu/lb · mol). The equilibrium conversion for the dehydrogenation reaction is determined by temperature, pressure, and hydrogen partial pressure. As expected, the equilibrium conversion increases with temperature and decreases with pressure and with increasing hydrogen-to-hydrocarbon ratio. Kinetically, the overall conversion depends on space velocity (feed-to-catalyst ratio): excessively high space velocities do not allow for sufficient conversions, and space velocities that are too low lead to lower selectivities because of the onset of side and competitive reactions.

Figure 5.2.2 illustrates the flow scheme of an integrated complex incorporating Pacol, DeFine, and HF Detergent Alkylate units or Pacol, DeFine, and Detal units. The main differences between the two flow schemes are in the alkylation section as a result of the elimination of the HF acid handling and neutralization facilities; for example, no alumina treater is used in conjunction with a Detal process unit.

In the Pacol process, linear paraffins are dehydrogenated to linear olefins in the presence of hydrogen over a selective platinum dehydrogenation catalyst. An adiabatic radial-flow reactor with feed preheat is normally used to compensate for the endothermic temperature drop and to minimize pressure drop within an efficient reactor volume. Relatively high space velocities are used so that only a modest amount of catalyst is required. Hydrogen and some by-product light ends are separated from the dehydrogenation reactor effluent, and a part of this hydrogen gas is recycled back to the dehydrogenation reactor to minimize coking and enhance catalyst stability. The separator

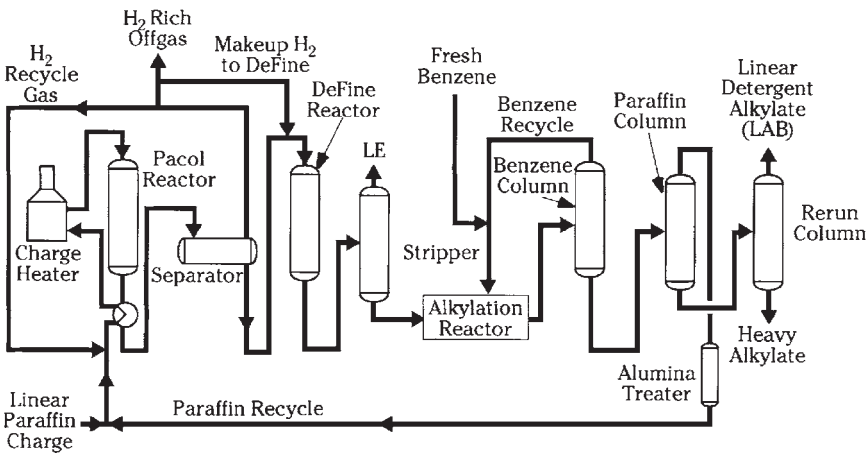

FIGURE 5.2.2 Integrated LAB complex.

*Trademark and/or service mark of UOP.

Downloaded from Digital Engineering Library @ McGraw-Hill (www.digitalengineeringlibrary.com)
Copyright © 2004 The McGraw-Hill Companies. All rights reserved.
Any use is subject to the Terms of Use as given at the website.

UOP PACOL DEHYDROGENATION PROCESS

liquid is an equilibrium mixture of linear olefins and unconverted *n*-paraffins, which are charged to a DeFine reactor for the selective conversion of diolefins to monoolefins. A near-stoichiometric amount of hydrogen is also charged to the DeFine reactor. The DeFine reactor effluent is stripped to remove dissolved light hydrocarbons. The stripper bottoms, a mixture of monoolefins and unconverted *n*-paraffins, is then charged together with benzene to the alkylation unit, where benzene is alkylated with the monoolefins to produce LAB. Small amounts of heavy alkylate and, if HF is used, polymer from the acid regenerator bottoms are also formed. Benzene and *n*-paraffins are fractionated from the alkylation reactor effluent and then recycled to the alkylation and Pacol reactors, respectively. The final column fractionates the LAB product overhead and recovers heavy alkylate as bottoms product.

A similar process scheme can be used to produce concentrated *n*-olefins. Figure 5.2.3 illustrates the flow scheme of an integrated complex featuring the Pacol, DeFine, and Olex* processes. In this combination, the Pacol and DeFine processes are the same as described previously. The stripper bottoms stream, which consists of an equilibrium mixture of *n*-paraffins and *n*-monoolefins, is now sent to an Olex separation unit. The Olex process uses continuous liquid-phase, simulated countercurrent adsorptive separation technology to recover high-purity *n*-olefins out of the mixture. The olefinic extract and the paraffinic raffinate streams that leave the adsorption chamber both contain desorbent. These two streams are fractionated for the removal and recovery of the desorbent, which is then recycled back to the adsorption chamber. The paraffin raffinate is recycled to the Pacol dehydrogenation unit for complete conversion of the unconverted *n*-paraffins to the ultimate *n*-olefin product. Table 5.2.1 shows the olefins composition of a typical Olex process.

The LIO produced by the Pacol process and recovered in an Olex unit is premium material for the production of detergent alcohols via hydroformylation. Oxo technologies, such as Shell's, Exxon's (formerly Norsolor's and Ugine Kuhlmann's), or Sasol's can be used. Three integrated Pacol-Olex-Oxo complexes are currently operating. Surfactants made from detergent alcohols manufactured according to this combination of technologies show superior properties in terms of detergency and solubility.

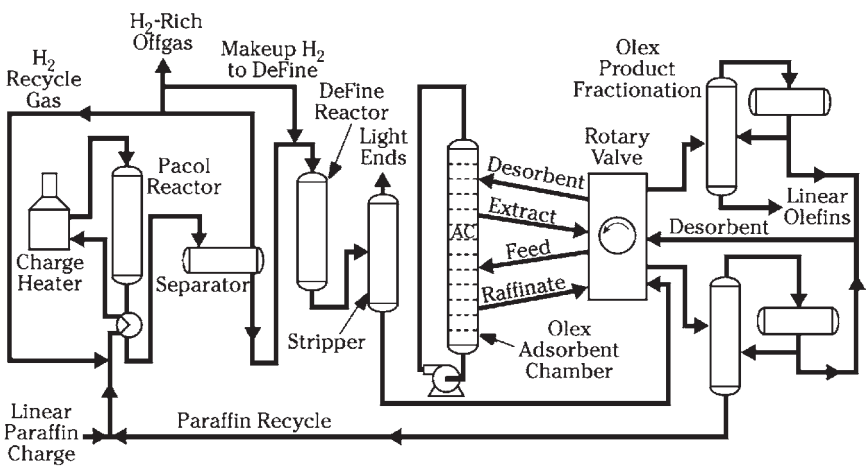

FIGURE 5.2.3 Integrated detergent olefins complex.

*Trademark and/or service mark of UOP.

Downloaded from Digital Engineering Library @ McGraw-Hill (www.digitalengineeringlibrary.com)
Copyright © 2004 The McGraw-Hill Companies. All rights reserved.
Any use is subject to the Terms of Use as given at the website.

UOP PACOL DEHYDROGENATION PROCESS

TABLE 5.2.1 Typical Olex Extract Composition

Composition	With PEP, wt %	Without PEP, wt %
Linear monoolefins	95.0	92.5
Other monoolefins	3.1	3.0
Diolefins	0.5	0.5
Total	98.5	96.0
Olefins	98.6	96.0
Aromatics (see text)	0.2	3.0
Paraffins	1.2	1.0
Total	100.0	100.0

PACOL PROCESS IMPROVEMENTS

Repeated successful attempts have been made over the years to increase the per-pass conversion of *n*-paraffins across the Pacol reactor and still preserve a high selectivity and high overall yield of linear olefins.

The more severe operating conditions used for higher reactor conversions also result in faster deactivation of the dehydrogenation catalyst. The catalyst used in the Pacol process has a direct impact on the reaction kinetics but not on equilibrium conversion, which is governed by thermodynamic principles. Therefore, most of the process improvements have been associated with modifications in reactor design or in operating conditions.

A high-conversion Pacol process was developed partially in response to the significant increase in feedstock and utility costs that occurred between 1974 and 1981. Operating the process at higher per-pass conversions affords several advantages. A smaller combined-feed stream to the dehydrogenation reactor permits a smaller-size unit and results in lower capital investment and utility costs. As the unconverted *n*-paraffins pass through the alkylation reaction zone and are separated by fractionation for recycle to the Pacol reactor, the reduction in the recycle stream also decreases the capital investment and operating cost of the detergent alkylation unit. All recent units are of the high-conversion type.

Criteria for the high-conversion design were to maintain the same selectivity to linear olefins and increase conversion. This approach required changes in operating conditions. Figure 5.2.4 shows the effect of pressure on olefin selectivity at constant temperature and hydrogen-to-feed mole ratio. At lower pressures, higher *n*-paraffin conversion can be obtained and selectivity can be maintained because of the more favorable dehydrogenation equilibrium.

A similar effect can be observed when the hydrogen-to-feed ratio is lowered. The latest designs of the Pacol process take advantage of both of these variables. The net result is a 30 percent increase in *n*-paraffin conversion compared to the earlier designs.

Overall, the Pacol catalyst possesses an attractive catalyst life in terms of metric tons of LAB produced per kilogram of catalyst. A typical run on a single Pacol catalyst load ranges from 30 to 60 days, depending on operating severity. As shown on Fig. 5.2.5, two parallel reactors were used for most units built through 1987. In this design, one reactor operates at any given time and the second reactor is on standby. When the decline in catalyst activity warrants a change, the reactors are switched. To expedite the change and minimize interruption in production, a start-up heater is provided. For safe operation and isolation, each valve shown in the drawing actually represents a double block and bleed valve. Thus, 16 large valves are required on process lines. These valves cycle from cold-to-hot and hot-to-cold service at each change of the reactors and require regular maintenance to control

Downloaded from Digital Engineering Library @ McGraw-Hill (www.digitalengineeringlibrary.com)
Copyright © 2004 The McGraw-Hill Companies. All rights reserved.
Any use is subject to the Terms of Use as given at the website.

UOP PACOL DEHYDROGENATION PROCESS

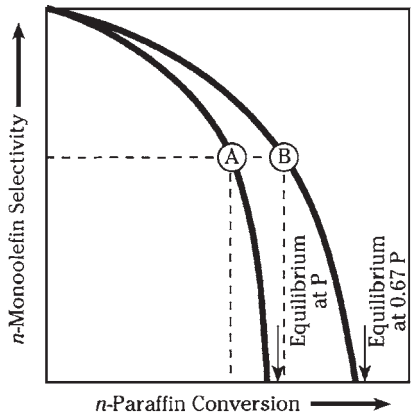

FIGURE 5.2.4 Effect of pressure on conversion.

leakage. To minimize maintenance and simplify the operation, a new reactor design (Fig. 5.2.6) is now used commercially in seven units. This design provides a catalyst hopper on the top and on the bottom of a single reactor and a hydrogen and a nitrogen purge system. When catalyst activity has declined sufficiently, the catalyst from the reactor is withdrawn to the lower hopper, and fresh catalyst is loaded from the top hopper, thereby eliminating the need for valves in large-diameter process lines. An additional catalyst volume inside the reactor vessel is provided as a preheating zone. A portion of the hydrogen-rich recycle gas passes through a heat exchanger and is used for preheating the catalyst. The hydrogen-rich gas is also used to purge hydrocarbons from the catalyst that leaves the reactor. This design is similar in concept to that used commercially in more than 100 UOP CCR Platforming* units.

Outside the reactor sector, other process design changes made over the past few years have also contributed to enhancing the reliability and economics of the Pacol process. One, for example, reflects the introduction of rotary screw compressors instead of the reciprocating or centrifugal machines used in earlier Pacol units. Rotary screw compressors are especially effective when lube oil contamination of the process gas cannot be tolerated. Nonlubricated screw compressors can deliver gases with the same reliability as a centrifugal compressor, and the positive displacement of screw compressors makes them well suited for applications that require high compression ratios and large changes in gas molecular weights. In addition, screw machines offer economic benefits over comparable reciprocating machines in terms of lower installation costs and not requiring a spare.

Changes in engineering design also resulted in increased energy efficiency, reduced fractionation losses, and improved operational stability. Some of these design changes concerned the Pacol unit itself, but many were more closely associated with the associated downstream units.

As in the design of other process units, significant energy savings were achieved by relatively small incremental expenditures in increased exchanger area and by rearrangement of the heat exchanger network. For example, a low-pressure-drop contact condenser was advantageously introduced to cool the reactor effluent after the hot combined-feed effluent exchanger. Also, the application of efficient mixing technology in the reaction zone

*Trademark and/or service mark of UOP.

Downloaded from Digital Engineering Library @ McGraw-Hill (www.digitalengineeringlibrary.com)
Copyright © 2004 The McGraw-Hill Companies. All rights reserved.
Any use is subject to the Terms of Use as given at the website.

UOP PACOL DEHYDROGENATION PROCESS

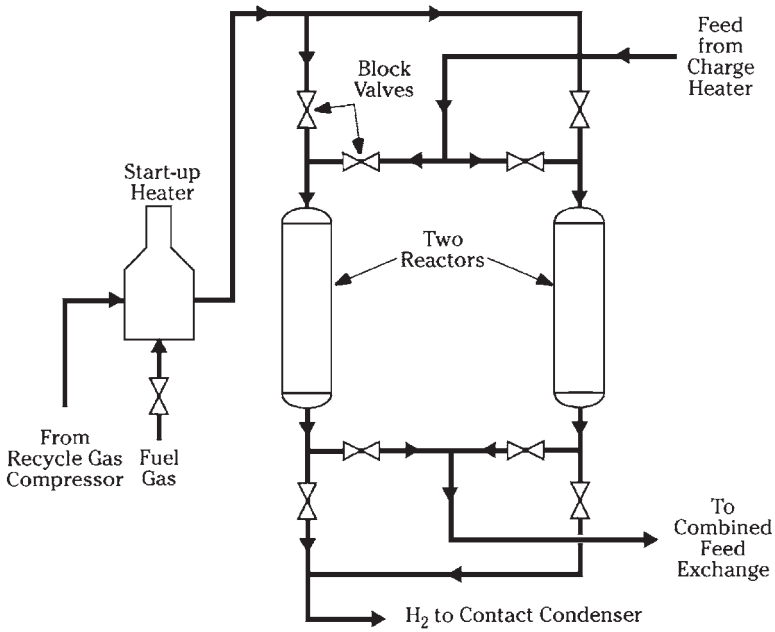

FIGURE 5.2.5 Two-reactor design.

enhanced the quality of the reaction environment and allowed operation with recycle ratios close to their minimums.

YIELD STRUCTURE

If expressed on a weight basis, the yield of linear olefins from *n*-paraffins in the Pacol process depends on the molecular weight of the feedstock. In the common situation in which linear olefins are produced for the manufacture of LAB, typically from *n*-paraffins in the C_{10} to C_{13} carbon range, about 1.05 kg of feed is required per 1.00 kg of linear olefins, or about 97 percent of the theoretical stoichiometric yield.

COMMERCIAL EXPERIENCE

More than 30 Pacol process units have been built and brought on-stream around the world since the mid-1960s, and practically without exception, all are still operating. A few other units are in various stages of design and construction. Most Pacol units are directly integrated with a benzene alkylation unit for the production of LAB without the need for an intermediate separation or recovery of the LIOs. These units represent an aggregate design capacity in excess of 1.3 million metric tons per year (MTA) of LAB; however, through revamps and expansions, the actual operating capacity is significantly larger. In addition, other Pacol units are associated with Olex units to recover LIO for the production of detergent alcohols.

Downloaded from Digital Engineering Library @ McGraw-Hill (www.digitalengineeringlibrary.com)
Copyright © 2004 The McGraw-Hill Companies. All rights reserved.
Any use is subject to the Terms of Use as given at the website.

UOP PACOL DEHYDROGENATION PROCESS

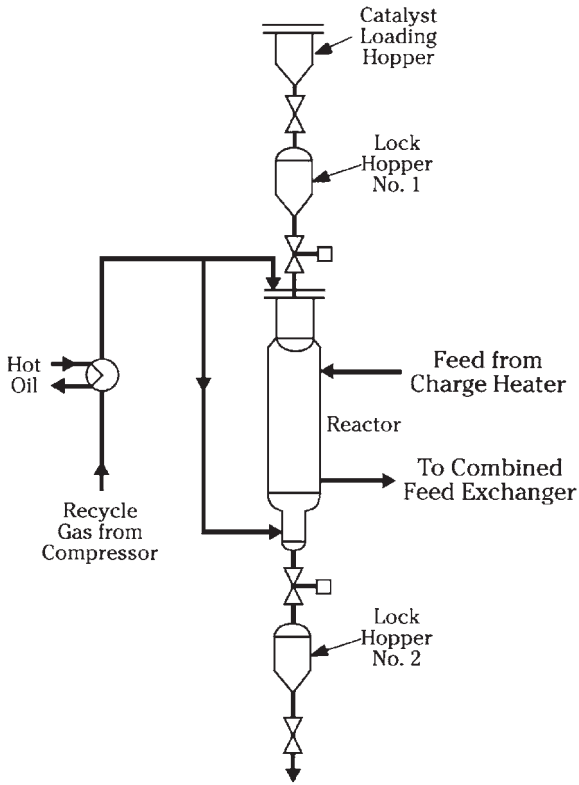

FIGURE 5.2.6 One-reactor design.

PROCESS ECONOMICS

Because a Pacol unit is never found by itself, but is instead integrated with a DeFine unit and either a HF Detergent Alkylate unit, a Detal solid-acid alkylation unit, or an Olex LIO separation unit, the economics can be discussed only in conjunction with the associated units. Details on LAB production can be found in Chap. 1.5.

As a different example, economics for the production of 60,000 MTA of LIO starting from *n*-paraffins are shown in Table 5.2.2. The complex includes Pacol, DeFine, and Olex units and reflects typical economic conditions. The resulting production cost of $617/MT of LIO compares favorably with the costs of production of LIO or LAO by other routes. A typical product composition is shown in Table 5.2.1. If desired, the aromatic content can be reduced by adding the UOP proprietary PEP* (Pacol Enhancement Process) for the selective removal of aromatics; introduction of this novel technology has resulted in more than 90 percent reduction in the aromatic content and a 2.5 to 3.0 percent increase in olefin purity as seen in Table 5.2.1.

*Trademark and/or service mark of UOP.

Downloaded from Digital Engineering Library @ McGraw-Hill (www.digitalengineeringlibrary.com)
Copyright © 2004 The McGraw-Hill Companies. All rights reserved.
Any use is subject to the Terms of Use as given at the website.

UOP PACOL DEHYDROGENATION PROCESS

TABLE 5.2.2 Economics for LIO Production Using the UOP Pacol, DeFine, and Olex Processes*

		Per MT of LIO	
	Unit cost, $	Units	$
Raw materials:			
n-Paraffins (98% purity)	400/MT	1.05 MT	420.0
By-product credits		−0.05 MT	−13.1
Catalysts and chemicals			32.2
Utilities:			
Power	0.05/kWh	305 kWh	15.3
Steam	7.1/MT	0.16 MT	1.1
Cooling water	0.01/m^3	17 m^3	0.2
Fuel fired (92% eff.)	2.32/GJ	16.30 GJ	37.8
Labor, maintenance, direct overhead, and supervision			25.2
Overhead, insurance, property taxes, depreciation, amortization			98.6
Total cost of production			617.3

*Estimated erected cost: $65,000,000 (basis: 60,000 MT/year of LIO). MT = metric tons.

BIBLIOGRAPHY

Vora, B. V., P. R. Pujadó, and M. A. Allawala, "Petrochemical Route to Detergent Intermediates," 1988 UOP Technology Conference.

Downloaded from Digital Engineering Library @ McGraw-Hill (www.digitalengineeringlibrary.com)
Copyright © 2004 The McGraw-Hill Companies. All rights reserved.
Any use is subject to the Terms of Use as given at the website.

Downloaded from Digital Engineering Library @ McGraw-Hill (www.digitalengineeringlibrary.com)
Copyright © 2004 The McGraw-Hill Companies. All rights reserved.
Any use is subject to the Terms of Use as given at the website.

Source: HANDBOOK OF PETROLEUM REFINING PROCESSES

P · A · R · T · 6

HYDROGEN PRODUCTION

Downloaded from Digital Engineering Library @ McGraw-Hill (www.digitalengineeringlibrary.com)
Copyright © 2004 The McGraw-Hill Companies. All rights reserved.
Any use is subject to the Terms of Use as given at the website.

Downloaded from Digital Engineering Library @ McGraw-Hill (www.digitalengineeringlibrary.com)
Copyright © 2004 The McGraw-Hill Companies. All rights reserved.
Any use is subject to the Terms of Use as given at the website.

Source: HANDBOOK OF PETROLEUM REFINING PROCESSES

CHAPTER 6.1
FW HYDROGEN PRODUCTION

James D. Fleshman
Foster Wheeler USA Corporation
Houston, Texas

INTRODUCTION

As hydrogen use has become more widespread in refineries, hydrogen production has moved from the status of a high-technology specialty operation to an integral feature of most refineries. This has been made necessary by the increase in hydrotreating and hydrocracking, including the treatment of progressively heavier feedstocks.

Steam reforming is the dominant method for hydrogen production. This is usually combined with pressure-swing adsorption (PSA) to purify the hydrogen to greater than 99 vol %.

As hydrogen production grows, a better understanding of the capabilities and requirements of the modern hydrogen plant becomes ever more useful to the refiner. This will help the refiner get the most from existing or planned units and make the best use of hydrogen supplies in the refinery.

USES OF HYDROGEN

Overview

There has been a continual increase in refinery hydrogen demand over the last several decades. This is a result of two outside forces acting on the refining industry: environmental regulations and feedstock shortages. These are driving the refining industry to convert from distillation to conversion of petroleum. Changes in product slate, particularly outside the United States, are also important. Refiners are left with an oversupply of heavy, high-sulfur oil, and in order to make lighter, cleaner, and more salable products, they need to add hydrogen or reject carbon.

Within this trend there are many individual factors depending on location, complexity of the refinery, etc.

Downloaded from Digital Engineering Library @ McGraw-Hill (www.digitalengineeringlibrary.com)
Copyright © 2004 The McGraw-Hill Companies. All rights reserved.
Any use is subject to the Terms of Use as given at the website.

FW HYDROGEN PRODUCTION

Hydrogen Demand

The early use of hydrogen was in naphtha hydrotreating, as feed pretreatment for catalytic reforming (which in turn was producing hydrogen as a by-product). As environmental regulations tightened, the technology matured and heavier streams were hydrotreated. These included light and heavy distillates and even vacuum residue.

Hydrotreating has also been used to saturate olefins and make more stable products. For example, the liquids from a coker generally require hydrotreating, to prevent the formation of polymers.

At the same time that demand for cleaner distillates has increased, the demand for heavy fuel oil has dropped. This has led to wider use of hydrocracking, which causes a further large increase in the demand for hydrogen.

Table 6.1.1 shows approximate hydrogen consumption for hydrotreating or hydrocracking of various feedstocks.

HYDROGEN PRODUCTION

Hydrogen has historically been produced in catalytic reforming, as a by-product of the production of the high-octane aromatic compounds used in gasoline. Changes in this process have had a large impact on the refinery hydrogen balance.

As reforming has changed from fixed-bed to cyclic to continuous regeneration, pressures have dropped and hydrogen production per barrel of reformate has increased. Recent changes in gasoline composition, due to environmental concerns, have tended to reduce hydrogen production, however. Besides limits on aromatics, requirements for oxygenates in gasoline have resulted in reduced reforming severity, as the high-octane oxygenates have displaced reformate from the gasoline pool. The only safe statement is that the situation will continue to change.

Where by-product hydrogen production has not been adequate, hydrogen has been manufactured by steam reforming. In some cases partial oxidation has been used, particu-

TABLE 6.1.1 Hydrogen Consumption Data

Chemical consumption only

Process	Wt % on feed	SCF/bbl	Wt % on crude
Hydrotreating:			
Straight-run naphtha	0.05	20	0.01
FCC naphtha/coker naphtha	1	500	0.05–0.01
Kerosene	0.1	50	0.1–0.02
Hydrodesulfurization:			
Low-sulfur gas oil to 0.2% S	0.1	60	0.03
High-sulfur gas oil to 0.2% S	0.3	170	0.04
Low-sulfur gas oil to 0.05% S	0.15	80	0.04
High-sulfur gas oil to 0.05% S	0.35	200	0.05
FCC gas oil/coker gas oil	1	600	0.1
Cycle oil hydrogenation	3	1700	0.3
Hydrocracking vacuum gas oil	2–3	1200–1800	0.5–0.8
Deep atmospheric residue conversion	2–3.5	1200–2200	1–2

Note: FCC = fluid catalytic cracker; SCF = standard cubic feet.
Source: Lambert et al.[8]

Downloaded from Digital Engineering Library @ McGraw-Hill (www.digitalengineeringlibrary.com)
Copyright © 2004 The McGraw-Hill Companies. All rights reserved.
Any use is subject to the Terms of Use as given at the website.

FW HYDROGEN PRODUCTION

larly where heavy oil is available at low cost. However, oxygen is then required, and the capital cost for the oxygen plant makes partial oxidation high in capital cost.

Figure 6.1.1 shows a typical modern hydrogen plant. This unit produces 82 million SCFD (at 60°F and 14.7 lb/in^2 absolute) [92,000 (N) m^3/h (N represents normal temperature and pressure at 0°C and 1.0332 kg/cm^2 absolute)] of hydrogen from natural gas for a Far Eastern refinery, at a purity of 99.9 vol %. The Foster Wheeler Terrace Wall* steam reforming furnace is visible in the background, with the 12 absorbers and two surge drums of the pressure-swing adsorption unit in the foreground.

Table 6.1.2 shows approximate hydrogen production from various processes.

Chemistry

Steam Reforming. In steam reforming, light hydrocarbons such as methane are reacted with steam to form hydrogen:[3,7]

$$CH_4 + H_2O \rightleftarrows 3H_2 + CO$$

$$\Delta H = 97{,}400 \text{ Btu/(lb} \cdot \text{mol) [227 kJ/ (g} \cdot \text{mol)]}$$

where ΔH is the heat of reaction. The reaction equation can be generalized to

$$C_nH_m + (n)\,H_2O + \left(n + \frac{m}{2}\right)H_2 + nCO$$

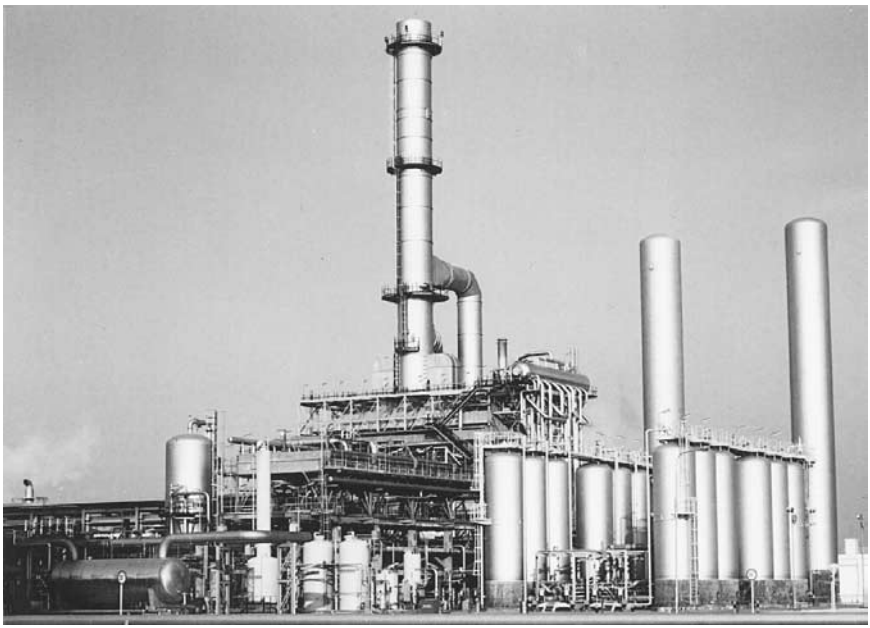

FIGURE 6.1.1 Modern hydrogen plant.

*Registered trademark of Foster Wheeler.

Downloaded from Digital Engineering Library @ McGraw-Hill (www.digitalengineeringlibrary.com)
Copyright © 2004 The McGraw-Hill Companies. All rights reserved.
Any use is subject to the Terms of Use as given at the website.

FW HYDROGEN PRODUCTION

TABLE 6.1.2 Hydrogen Production Data

Process	Wt % on feed	SCF/bbl	Wt % on crude
Continuous regeneration reformer	3.5	1600	0.35–0.60
Semiregenerative reformer	1.4–2.0	600–900	0.15–0.30
Residue gasification	20–25	12,000–16,000	1–5
Catalytic cracking	0.05–0.10	30–60	0.01–0.04
Thermal cracking	0.03	20	0.01
Ethylene cracker	0.5–1.2	—	—
Steam (methane) reformer	30	12,000	—

Source: Lambert et al.[8]

The reaction is typically carried out at approximately 1600°F (870°C) over a nickel catalyst packed into the tubes of a reforming furnace. Because of the high temperature, hydrocarbons also undergo a complex series of cracking reactions, plus the reaction of carbon with steam. These can be summarized as

$$CH_4 \rightleftarrows 2H_2 + C$$

$$C + H_2O \rightleftarrows CO + H_2$$

Carbon is produced on the catalyst at the same time that hydrocarbon is reformed to hydrogen and CO. With natural gas or similar feedstock, reforming predominates and the carbon can be removed by reaction with steam as fast as it is formed. When heavier feedstocks are used, the carbon is not removed fast enough and builds up. Carbon can also be formed where the reforming reaction does not keep pace with heat input, and a hot spot is formed.

To avoid carbon buildup, alkali materials, usually some form of potash, are added to the catalyst when heavy feeds are to be used. These promote the carbon-steam reaction and help keep the catalyst clean. The reforming furnace is also designed to produce uniform heat input to the catalyst tubes, to avoid coking from local hot spots.

Even with promoted catalyst, cracking of the feedstock limits the process to hydrocarbons with a boiling point of 350°F (180°C) or less: natural gas, propane, butane, and light naphtha. Heavier hydrocarbons result in coke building up on the catalyst. Prereforming, which uses an adiabatic catalyst bed operating at a lower temperature, can be used as a pretreatment to allow slightly heavier feeds to be used without coking. A prereformer will also make the fired reformer more tolerant of variations in heat input.

After reforming, the CO in the gas is reacted with steam to form additional hydrogen, in the water-gas shift reaction

$$CO + H_2O \rightleftarrows CO_2 + H_2$$

$$\Delta H = -16{,}500 \text{ Btu/(lb} \cdot \text{mol)} \; [(-38.4 \text{ kJ/(g} \cdot \text{mol)}]$$

This leaves a mixture consisting primarily of hydrogen and CO_2. After CO_2 removal, which we shall discuss later, many plants use methanation—the reverse of reforming—to remove the remaining traces of carbon oxides:

$$CO + 3H_2 \rightleftarrows CH_4 + H_2O$$

$$CO_2 + 4H_2 \rightleftarrows CH_4 + 2H_2O$$

Partial Oxidation. Hydrogen can also be produced by partial oxidation of hydrocarbons:

Downloaded from Digital Engineering Library @ McGraw-Hill (www.digitalengineeringlibrary.com)
Copyright © 2004 The McGraw-Hill Companies. All rights reserved.
Any use is subject to the Terms of Use as given at the website.

FW HYDROGEN PRODUCTION

$$CH_4 + \tfrac{1}{2}O_2 \rightleftarrows CO + 2H_2$$

$$\Delta H = -10{,}195 \text{ Btu/(lb} \cdot \text{mol)} \; [-23.7 \text{ kJ/(g} \cdot \text{mol)}]$$

The shift reaction also participates so the result is a mixture of CO and CO_2 in addition to H_2. Temperature in partial oxidation is not limited by catalyst tube materials, so higher temperature may be used, which results in reduced methane slippage.

Steam Reforming/Wet Scrubbing

Figure 6.1.2 shows the flow sheet for a wet scrubbing plant, based on steam reforming of natural gas. Plants with similar configurations came into widespread use about 1960, when high-pressure steam reforming became economical. They were built until the mid-1980s, when they were generally supplanted by plants using PSA.

Feedstock at 450 lb/in^2 (31 bar) gage is preheated and purified to remove traces of sulfur and halogens in order to protect the reformer catalyst. The most common impurity is H_2S; this is removed by reaction with ZnO. Organic sulfur may also be present; in this case recycled product hydrogen is mixed with the feed and reacted over a hydrogenation catalyst (generally cobalt/molybdenum) to convert the organic sulfur to H_2S. If chlorides are present, they are also hydrogenated and then reacted with a chloride adsorbent.

The feed is then mixed with steam, preheated further, and reacted over nickel catalyst in the tubes of the reformer to produce synthesis gas—an equilibrium mixture of H_2, CO, and CO_2. The steam/carbon ratio is a key parameter, since high steam levels aid in methane conversion. Residual methane in the synthesis gas will pass through the plant unchanged (along with any N_2 in the feed). This will reduce the hydrogen purity so it is important to ensure a low methane leakage. A high steam/carbon ratio and high reforming temperatures

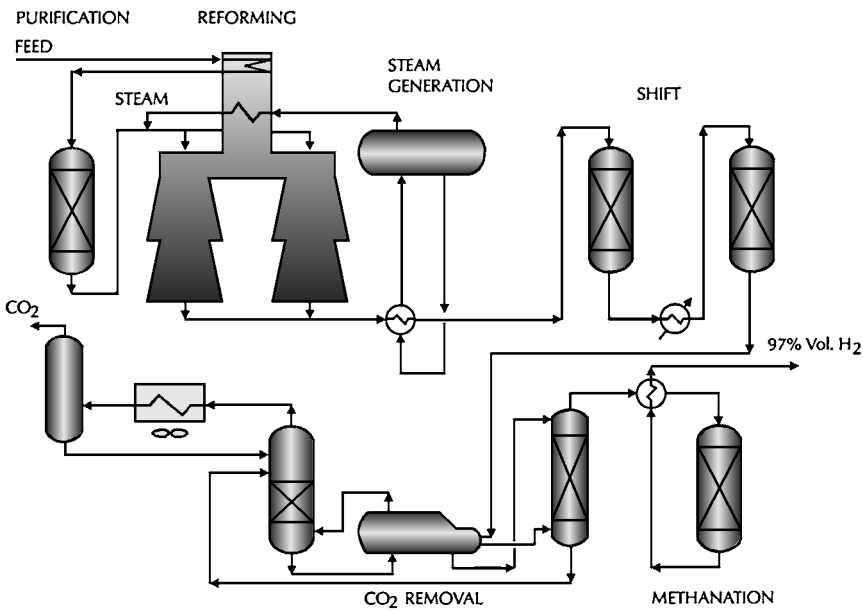

FIGURE 6.1.2 Hydrogen production by steam reforming/wet scrubbing.

Downloaded from Digital Engineering Library @ McGraw-Hill (www.digitalengineeringlibrary.com)
Copyright © 2004 The McGraw-Hill Companies. All rights reserved.
Any use is subject to the Terms of Use as given at the website.

FW HYDROGEN PRODUCTION

are used for this reason. Excess steam is also used to prevent coke formation on the catalyst. Typical reformer outlet conditions for hydrogen production are 1600°F and 300 lb/in^2 (870°C and 21 bar) gage.

Much of the design and operation of hydrogen plants involves protecting the reforming catalyst and the catalyst tubes. The extreme temperatures and the sensitivity of the catalyst tend to magnify small upsets. Minor variations in feed composition or operating conditions can have significant effects on the life of the catalyst or the reformer itself. This is particularly true of changes in molecular weight of the feed gas, or poor distribution of heat to the catalyst tubes.

The synthesis gas passes through the reformer waste heat exchanger, which cools the gas and generates steam for use in the reformer; the surplus is exported. The cooled gas [still at about 650°F (345°C)] is reacted over a fixed bed of iron oxide catalyst in the high-temperature shift converter, where the bulk of the CO is reacted, then cooled again and reacted over a bed of copper zinc low-temperature shift catalyst to convert additional CO.

The raw hydrogen stream is next scrubbed with a solution of a weak base to remove CO_2. The flow scheme in Fig. 6.1.2 is based on use of a potassium carbonate solution in water to react with the CO_2; a similar process uses an ethanolamine solution. CO_2 in the gas reacts reversibly with potassium carbonate to form potassium bicarbonate. The solution is depressured and steam-stripped to release CO_2, with the heat for the regenerator reboiler coming from the hot synthesis gas. The regenerator overhead stream is then cooled to condense water. The CO_2 is available for recovery or can be vented.

The raw hydrogen leaving the CO_2 removal section still contains approximately 0.5 percent CO and 0.1 percent CO_2 by volume. These will act as catalyst poisons to most hydrogen consumers, so they must be removed, down to very low levels. This is done by methanation, the reverse of reforming. As in reforming, a nickel catalyst is used, but as a fixed bed.

Typical final hydrogen purity is 97 vol %, with the remaining impurities consisting mainly of methane and nitrogen. Carbon oxide content is less than 50 vol ppm.

Product hydrogen is delivered from the methanator at approximately 250 lb/in^2 (17 bar) gage and must generally be compressed before final use. This is done in a reciprocating compressor. Centrifugal compressors are not feasible because of the low molecular weight; the pressure rise per foot of head is too low, and too many stages would be required.

Steam Reforming/PSA

Plants built since the mid-1980s are generally based on steam reforming followed by pressure-swing adsorption. PSA is a cyclic process which uses beds of solid adsorbent to remove impurities from the gas. The hydrogen itself passes through the adsorbent beds with only a tiny fraction absorbed. The beds are regenerated by depressurization, followed by purging at low pressure.

When the beds are depressured, a waste gas (or "tail gas") stream is produced, consisting of the impurities from the feed (CO_2, CO, CH_4, N_2) plus some hydrogen. This stream is burned in the reformer as fuel. Reformer operating conditions in a PSA-based plant are set so that the tail gas provides no more than about 85 percent of the reformer fuel. This limit is important for good burner control because the tail gas is more difficult to burn than regular fuel gas. The high CO_2 content can make it difficult to produce a stable flame.

As the reformer operating temperature is increased, the reforming equilibrium shifts, resulting in more hydrogen and less methane in the reformer outlet and hence less methane in the tail gas. Actual operating conditions can be further optimized according to the relative cost of feed, fuel, and export steam.

The flow sheet for a typical PSA-based hydrogen plant is shown in Fig. 6.1.3. As in the wet scrubbing process, the feed is purified and reformed, followed by shift conversion.

Downloaded from Digital Engineering Library @ McGraw-Hill (www.digitalengineeringlibrary.com)
Copyright © 2004 The McGraw-Hill Companies. All rights reserved.
Any use is subject to the Terms of Use as given at the website.

FW HYDROGEN PRODUCTION

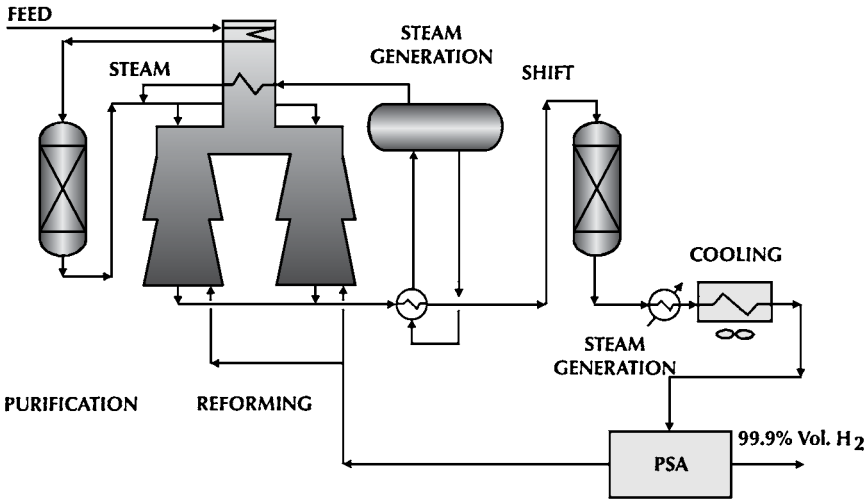

FIGURE 6.1.3 Hydrogen production by steam reforming/PSA.

Only a single stage of shift conversion is used, since a very low CO residual is not required. Any CO remaining in the raw hydrogen will be removed and recovered as reformer fuel. After cooling, the gas is purified in the PSA unit.

The PSA unit is simpler to operate than a wet scrubbing system, since it has no rotating equipment or circulating solutions. In addition, the adsorbent will remove methane and nitrogen, which could not be removed by the wet scrubbing process. Typical hydrogen recoveries in a PSA unit are in the 80 to 90 percent range, with product purity generally 99.9 vol %.

Because of the loss of hydrogen to the PSA tail gas, the reformer and front end of a PSA plant are larger than in a wet scrubbing plant. A PSA plant uses less process steam and does not require heat for the reboiler; this leaves additional steam available for export. Capital cost is generally lower for the design with PSA. The additional export steam can provide a strong utility cost advantage for the PSA plant in addition to its purity and operability advantages.

Product Properties

Hydrogen purity depends primarily on the purification method. This is illustrated in Table 6.1.3. In wet scrubbing, the major impurities are methane and nitrogen. Methane in the product is the residual left after reforming, or is formed in the methanator from residual CO or CO_2. Nitrogen in the feed is carried through the plant unchanged, although there is a dilution effect because of the larger volume of hydrogen compared to the feedstock.

In a PSA plant, most impurities can be removed to any desired level. Table 6.1.4 shows the difficulty of removal of impurities. Removal of a more difficult impurity will generally ensure virtually complete removal of easier impurities. Nitrogen is the most difficult to remove of the common impurities, and removing it completely requires additional adsorbent. Since it acts mainly as a diluent, it is usually left in the product. The exception occurs where the hydrogen is to be used in a very high-pressure system such as a hydrocracker. In that case the extra cost for nitrogen removal is justified by the savings in hydrogen purge losses.

Downloaded from Digital Engineering Library @ McGraw-Hill (www.digitalengineeringlibrary.com)
Copyright © 2004 The McGraw-Hill Companies. All rights reserved.
Any use is subject to the Terms of Use as given at the website.

FW HYDROGEN PRODUCTION

TABLE 6.1.3 Composition of Product Hydrogen

	Wet scrubbing	PSA
Hydrogen purity, vol %	95–97	99–99.99
Methane	2–4 vol %	100 vol ppm
$CO + CO_2$, vol ppm	10–50	10–50
Nitrogen, vol %	0–2	0.1–1.0

TABLE 6.1.4 Impurities—Ease of Removal by PSA

Easy	Moderate	Difficult	Not removed
C_3H_6	CO	O_2	H_2
C_4H_{10}	CH_4	N_2	He
C_5+	CO_2	Ar	
H_2S	C_2H_6		
NH_3	C_3H_8		
BTX	C_2H_4		
H_2O			

Note: BTX 5 benzene, toluene, and xylenes.
Source: Miller and Stoecker.[5]

In the case of a nitrogen-free feedstock such as liquefied petroleum gas (LPG) or naphtha, a purity of 99.99 percent can be readily achieved. In this case, carbon monoxide is the usual limiting component. Since CO must be removed to ppm levels, the other impurities—CO_2 and H_2O—are removed to virtually undetectable levels. A typical residual of about 100 ppm CH_4 remains because of inefficiencies in the purge system.

Operating Variables

Operating Conditions. The critical variables for steam reforming are temperature, pressure, and the steam/hydrocarbon ratio. Picking the operating conditions for a particular plant involves an economic trade-off among these three factors.

Steam reforming is an equilibrium reaction, and conversion of the hydrocarbon feedstock is favored by high temperature, which in turn carries a fuel penalty. Because of the volume increase in the reaction, conversion is also favored by low pressure, which conflicts with the need to supply the hydrogen at high pressure. In practice, temperature and pressure are limited by the tube materials.

Table 6.1.5 shows the effect of changes in temperature, pressure, and the steam/carbon ratio. The degree of conversion is measured by the remaining methane in the reformer outlet, known as the *methane leakage.*

Shift Conversion. In contrast to reforming, shift conversion is favored by low temperature. The gas from the reformer is reacted over iron oxide catalyst at 600 to 700°F (315 to 370°C), with the limit set by the low-temperature activity of the catalyst. In wet scrubbing plants using a methanator, it is necessary to remove CO to a much lower level to avoid excessive temperatures in the methanator. In those plants the gas is cooled again and reacted further over a copper-based catalyst at 400 to

Downloaded from Digital Engineering Library @ McGraw-Hill (www.digitalengineeringlibrary.com)
Copyright © 2004 The McGraw-Hill Companies. All rights reserved.
Any use is subject to the Terms of Use as given at the website.

FW HYDROGEN PRODUCTION

TABLE 6.1.5 Effect of Operating Variables on the Reformer

Temperature		Absolute pressure			
°F	°C	lb/in^2	bar	Steam/carbon ratio	CH_4 in outlet, mol % (dry basis)
1500	815	350	24	3.0	8.41
1550	845	350	24	3.0	6.17
1600	870	350	24	3.0	4.37
1550	845	300	21	3.0	5.19
1550	845	400	28	3.0	7.09
1550	845	350	24	2.5	8.06
1550	845	350	24	3.5	4.78

TABLE 6.1.6 Effect of Process Variables on Shift Conversion

HTS inlet temperature		LTS inlet temperature			
°F	°C	°F	°C	Reformer steam/ carbon ratio	CO in outlet, mol % dry basis
600	315	—	—	3.0	2.95
700	370	—	—	3.0	4.07
600	315	—	—	5.0	1.53
700	370	—	—	5.0	2.33
600	315	400	205	3.0	0.43
600	315	500	260	3.0	0.94
700	370	400	205	3.0	0.49
700	370	500	260	3.0	1.04
600	315	400	205	5.0	0.19
600	315	500	260	5.0	0.46
700	370	400	205	5.0	0.21
700	370	500	260	5.0	0.50

500°F (205 to 260°C). Table 6.1.6 shows the effect of temperature and the steam/carbon ratio on the CO remaining after shift conversion.

Alternative Processes

Partial Oxidation. Partial oxidation (POX) reacts hydrocarbon feed with oxygen at high temperatures to produce a mixture of hydrogen and carbon monoxide. Since the high temperature takes the place of a catalyst, POX is not limited to the light, clean feedstocks required for steam reforming. Partial oxidation is high in capital cost, and for light feeds it has been generally replaced by steam reforming. However, for heavier feedstocks it remains the only feasible method.

In the past, POX was considered for hydrogen production because of expected shortages of light feeds. It can also be attractive as a disposal method for heavy, high-sulfur streams, such as asphalt or petroleum coke, which sometimes are difficult to dispose of.

Consuming all a refinery's asphalt or coke by POX would produce more hydrogen than is likely to be required. Because of this and the economies of scale required to make POX

Downloaded from Digital Engineering Library @ McGraw-Hill (www.digitalengineeringlibrary.com)
Copyright © 2004 The McGraw-Hill Companies. All rights reserved.
Any use is subject to the Terms of Use as given at the website.

FW HYDROGEN PRODUCTION

economic, hydrogen may be more attractive if produced as a by-product, with electricity as the primary product.

Figure 6.1.4 is a block flow diagram of a unit to produce electricity from asphalt, with hydrogen as a by-product. Besides being high in carbon, the asphalt contains large amounts of sulfur, nitrogen, nickel, and vanadium (Table 6.1.7). Much of the cost of the plant is associated with dealing with these components.

The asphalt is first gasified with oxygen in an empty refractory-lined chamber to produce a mixture of CO, CO_2, and H_2. Because of the high temperature, methane production is minimal. Gas leaving the gasifier is first quenched in water to remove solids, which include metals (as ash) and soot. Metals are removed by settling and filtration, and the soot is recycled to the gasifier. The gas is further cooled and H_2S is removed by scrubbing with a selective solvent. Sulfur removal is complicated by the fact that a significant amount of carbonyl sulfide (COS) is formed in the gasifier. This must be hydrolyzed to H_2S, or a solvent that can remove COS must be used.

Hydrogen processing in this system depends on how much of the gas is to be recovered as hydrogen and how much is to be used as fuel. Where hydrogen production is a relatively

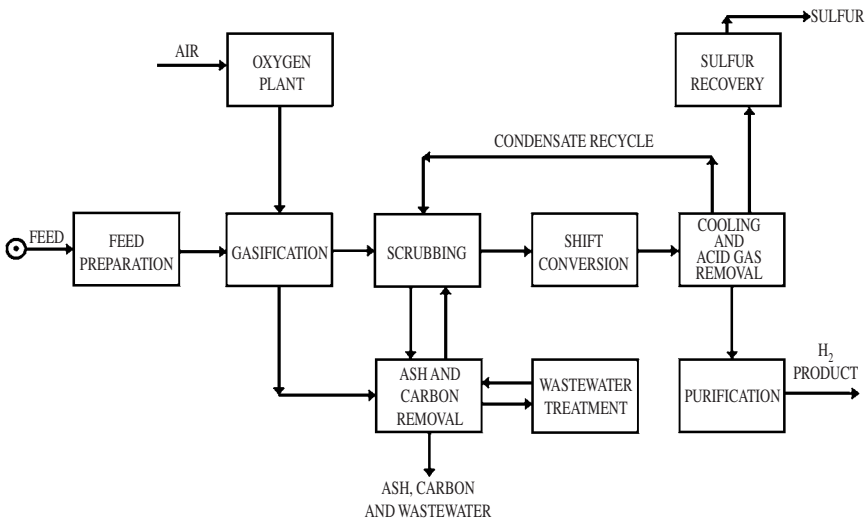

FIGURE 6.1.4 Hydrogen production by partial oxidation.

TABLE 6.1.7 Asphalt Composition—Partial Oxidation Feedstock

Density at 15°C	1.169 kg/L
Carbon	85.05 wt %
Hydrogen	8.10 wt %
Nitrogen	0.80 wt %
Sulfur	6.00 wt %
Ash	0.05 wt %
V	600 ppm
Ni	200 ppm

Downloaded from Digital Engineering Library @ McGraw-Hill (www.digitalengineeringlibrary.com)
Copyright © 2004 The McGraw-Hill Companies. All rights reserved.
Any use is subject to the Terms of Use as given at the website.

FW HYDROGEN PRODUCTION

small part of the total gas stream, a membrane unit can be used to withdraw a hydrogen-rich stream. This is then purified in a PSA unit. In the case where maximum hydrogen is required, the entire gas stream may be shifted to convert CO to H_2, and a PSA unit used on the total stream.

Catalytic Partial Oxidation. Also known as *autothermal reforming*, catalytic partial oxidation reacts oxygen with a light feedstock, passing the resulting hot mixture over a reforming catalyst. Since a catalyst is used, temperatures can be lower than in noncatalytic partial oxidation, which reduces the oxygen demand.

Feedstock composition requirements are similar to those for steam reforming: light hydrocarbons from refinery gas to naphtha may be used. The oxygen substitutes for much of the steam in preventing coking, so a lower steam/carbon ratio can be used. Since a large excess of steam is not required, catalytic POX produces more CO and less hydrogen than steam reforming. Because of this it is suited to processes where CO is desired, for example, as synthesis gas for chemical feedstocks. Partial oxidation requires an oxygen plant, which increases costs. In hydrogen plants, it is therefore used mainly in special cases such as debottlenecking steam reforming plants, or where oxygen is already available on-site.

By-product Recovery

Carbon dioxide and steam are the major by-products from hydrogen manufacture.

Carbon Dioxide. Where there is a market for CO_2, recovery can be very attractive. Historically the major use has been in the food industry, with recent growth being for injection in enhanced oil recovery. A substantial amount of CO_2 is available from hydrogen plants: a plant making 10 million SCFD [11,000 (N) m^3/h] of hydrogen from natural gas vents 2.5 million SCFD or 145 tons/day (132 MT/day) of CO_2.

Recovery of CO_2 is easiest in older plants using wet scrubbing. These produce a concentrated CO_2 stream which needs only final purification to remove traces of H_2, CO, and CH_4, followed by compression.

More recent plants, using PSA, can use a vacuum-swing adsorption (VSA) system for CO_2 recovery (Fig. 6.1.5). Tail gas from the PSA system is compressed and fed to the VSA system, which uses a separate set of adsorber vessels. By using vacuum regeneration, the system can split the tail gas into a CO_2 product stream, a hydrogen-rich stream which is recycled to the reformer, and a nitrogen-rich reject stream.

Besides recovering CO_2, the VSA system increases overall hydrogen production by recovering hydrogen which would otherwise have been lost in the tail gas.

A wet scrubbing system can also be installed upstream of a PSA unit to recover CO_2. This can also be used in a revamp to increase capacity by reducing the load on the PSA system.

Steam. Most hydrogen plants generate steam, mainly for use as process steam with the excess available for export. A typical 50 million SCFD [56,000 (N) m^3/h] unit based on PSA will export between 70,000 and 160,000 lb/h (between 30 and 70 MT/h), depending on configuration. Plants with air preheat are at the lower end of the steam production range, while steam export can be further increased by adding auxiliary burners between the radiant and convection sections.

Catalysts

Hydrogen plants are one of the most extensive users of catalysts in the refinery. Catalytic operations include hydrogenation, steam reforming, shift conversion, and methanation.[7]

Downloaded from Digital Engineering Library @ McGraw-Hill (www.digitalengineeringlibrary.com)
Copyright © 2004 The McGraw-Hill Companies. All rights reserved.
Any use is subject to the Terms of Use as given at the website.

FW HYDROGEN PRODUCTION

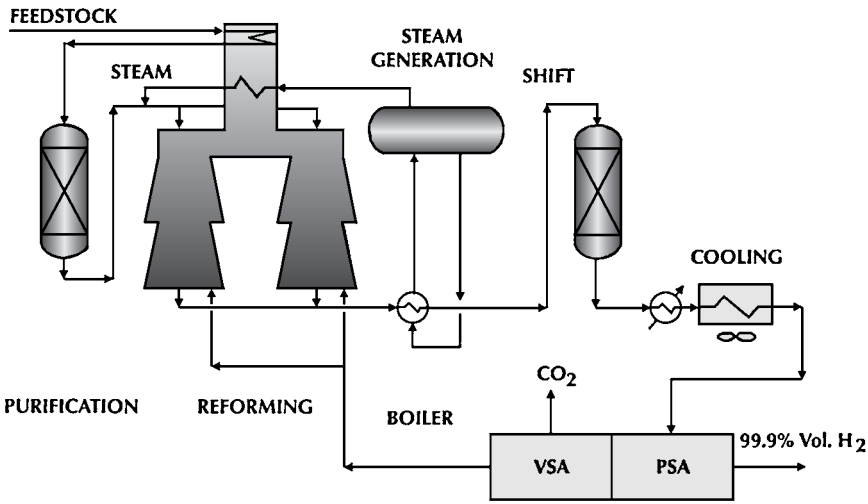

FIGURE 6.1.5 CO_2 by-product recovery.

Sulfur and halogen removal are actually done by reaction with solid adsorbents, but they are included here for completeness.

Reforming. Because of the high temperatures and heat load of the reforming reaction, reforming catalyst is used inside the radiant tubes of a reforming furnace. The catalyst is subject to severe operating conditions: up to 1600°F (870°C), with typical pressure drops of 40 lb/in^2 (2.8 bar). To withstand these conditions, the carrier is generally an alumina ceramic, although some older formulations use calcium aluminate.

The active agent in reforming catalyst is nickel, and normally the reaction is controlled by both diffusion and heat transfer. The catalyst is therefore made in rings to provide increased mass and heat transfer at minimum pressure drop. To further increase heat transfer, most catalyst vendors now offer specially shaped catalyst.

Even with a high-strength carrier, catalyst life is limited as much by physical breakdown as by deactivation. Thermal cycling is especially hard on the catalyst: When the tubes are heated, they expand and the catalyst tends to settle in the tube; then when the tube cools and the tube contracts, the catalyst is crushed. This can cause voids to form in the tubes, leading to hot spots and ultimately to ruptured tubes.

The main poisons are sulfur and chlorides, which are present in small quantities in most feedstocks. Sulfur poisoning is theoretically reversible, and the catalyst can often be restored to near full activity by steaming. However, in practice the deactivation may cause the catalyst to overheat and coke, to the point that it must be replaced.

Chlorides are an irreversible poison: The chlorine combines with the nickel to form nickel chloride, which is volatile. The nickel migrates and recrystallizes, reducing the catalyst activity.

The catalyst is also sensitive to poisoning by heavy metals and arsenic, although these are rarely present in feedstocks.

The catalyst is supplied as nickel in the oxide form. During start-up the catalyst is heated in a stream of inert gas, then steam. When the catalyst is near the normal operating tem-

Downloaded from Digital Engineering Library @ McGraw-Hill (www.digitalengineeringlibrary.com)
Copyright © 2004 The McGraw-Hill Companies. All rights reserved.
Any use is subject to the Terms of Use as given at the website.

FW HYDROGEN PRODUCTION

perature, hydrogen or a light hydrocarbon is added to reduce the nickel oxide to metallic nickel. Steaming the catalyst will oxidize the nickel, but most catalysts can readily be rereduced.

Shift Conversion. The second important reaction in a steam reforming plant is the shift conversion reaction

$$CO + H_2O \rightleftarrows CO_2 + H_2$$

The equilibrium is dependent on temperature, with low temperatures favoring high conversions.

Two basic types of shift catalyst are used in steam reforming plants: iron/chrome high-temperature shift catalysts and copper/zinc low-temperature shift catalysts.

High-Temperature Shift. High-temperature shift catalyst operates in the range of 600 to 800°F (315 to 430°C). It consists primarily of magnetite, Fe_3O_4, with chrome oxide, Cr_2O_3, added as a stabilizer. The catalyst is supplied in the form of Fe_2O_3 and CrO_3, and must be reduced. This can be done by the hydrogen and carbon monoxide in the shift feed gas, and occurs naturally as part of the start-up procedure.

If the steam/carbon ratio of the feed is too low, the reducing environment is too strong and the catalyst can be reduced further, to metallic iron. This is a problem, since metallic iron will catalyze Fischer-Tropsch reactions and form hydrocarbons. In older wet scrubbing plants this was rarely a problem, since the steam/carbon ratio of the process gas was in the range of 5 to 6, too high for iron formation. In some newer plants with steam/carbon ratios below 3, the shift catalyst is slowly converted to iron, with the result that significant amounts of hydrocarbons are formed over the high-temperature shift catalyst.

To slow down (but not eliminate) overreduction, the catalyst can be doped with copper, which acts by accelerating the conversion of CO. It increases activity at lower temperatures, but also makes the catalyst sensitive to poisoning by sulfur and chlorides.

High-temperature shift catalyst is very durable. In its basic form it is not sensitive to most poisons and has high mechanical strength. It is subject to thermal sintering, however, and once it has operated at a particular temperature, it loses its activity at lower temperatures.

Low-Temperature Shift. Low-temperature (LT) shift catalyst operates with a typical inlet temperature of 400 to 450°F (205 to 230°C). Because of the lower temperature, the reaction equilibrium is better and outlet CO is lower.

Low-temperature shift catalyst is economic primarily in wet scrubbing plants, which use a methanator for final purification. The main advantage of the additional conversion is not the extra hydrogen that is produced, but the lower CO residual. This reduces the temperature rise (and hydrogen loss) across the methanator.

PSA-based plants generally do not use LT shift, since any unconverted CO will be recovered as reformer fuel. Since an LT shift increases hydrogen production for a fixed reformer size, it may be used in revamps to increase production.

Low-temperature shift catalyst is sensitive to poisoning by sulfur and chlorides. It is also mechanically fragile and sensitive to liquid water, which can cause softening of the catalyst followed by crusting or plugging.

The catalyst is supplied as copper oxide on a zinc oxide carrier, and the copper must be reduced by heating it in a stream of inert gas with measured quantities of hydrogen. Reduction is strongly exothermic and must be closely monitored.

Methanation. In wet scrubbing plants, final hydrogen purification is by methanation, which converts CO and CO_2 to CH_4. The active agent is nickel, on an alumina carrier.

Downloaded from Digital Engineering Library @ McGraw-Hill (www.digitalengineeringlibrary.com)
Copyright © 2004 The McGraw-Hill Companies. All rights reserved.
Any use is subject to the Terms of Use as given at the website.

FW HYDROGEN PRODUCTION

The catalyst has a long life, as it operates under clean conditions and is not exposed to poisons. The main source of deactivation is plugging from carryover of CO_2 removal solutions.

The most severe hazard is overtemperature, from high levels of CO or CO_2. This can result from breakdown of the CO_2 removal equipment or from exchanger tube leaks which quench the shift reaction. The results of breakthrough can be severe, since the methanation reaction produces a temperature rise of 125°F per 1 percent of CO, or 60°F per 1 percent of CO_2. While the normal operating temperature in a methanator is approximately 600°F (315°C), it is possible to reach 1300°F (700°C) in cases of major breakthrough.

Feed Purification. Long catalyst life in modern hydrogen plants is attributable to a great extent to effective feed purification, particularly sulfur and chloride removal. A typical natural gas or other light hydrocarbon feedstock contains traces of H_2S and organic sulfur. Refinery gas may contain organic chlorides from a catalytic reforming unit.

To remove these it is necessary to hydrogenate the feed to convert the organic sulfur to H_2S, which is then reacted with zinc oxide: organic chlorides are converted to HCl and reacted with an alkali metal adsorbent. Purification is done at approximately 700°F (370°C), since this results in best use of the zinc oxide as well as ensures complete hydrogenation.

Coking of Reforming Catalyst. Coking of the reformer catalyst is the most characteristic problem in a hydrogen plant. While it may be similar in appearance to the fouling of heater tubes found in other units, additional precautions are necessary here. A major reason for the high reliability of modern units is the reduction in catalyst coking. This is due to advances in catalyst technology and in reformer design.

While light, methane-rich streams such as natural gas or light refinery gas are the most common feeds to hydrogen plants, there is often a requirement to process a variety of heavier feedstocks, including LPG and naphtha, because of seasonal variations in feedstock price, an interruptible supply of natural gas, or turnarounds in a gas-producing unit. Feedstock variations may also be inadvertent, for example, changes in refinery offgas composition from another unit.

When heavier feedstocks are used in a hydrogen plant, the primary concern is coking of the reformer catalyst. There will also generally be a small capacity reduction due to the additional carbon in the feedstock and additional steam required. This increases the load on the shift and CO_2 removal section of the plant. The size of this effect will depend on the feedstocks used and on the actual plant. Coking, however, is of more immediate concern, since it can prevent the plant from operating.

Coking is most likely about one-third the way down the tube, where both temperature and hydrocarbon content are high enough. In this region, hydrocarbons can crack and polymerize faster than the coke is removed by reaction with steam or hydrogen. Once the catalyst is deactivated, temperature increases further and coking accelerates. Farther down the tube, where the hydrocarbon/hydrogen (HC/H_2) ratio is lower, there is less risk of coking. Coking depends to a large extent on the balance between catalyst activity and heat input; more active catalyst produces more hydrogen at lower temperature, reducing the risk of coking. Uniform heat input is especially important in this region of the catalyst tube, since any catalyst voids or variations in catalyst activity can produce localized hot spots, leading to coke formation or tube failure.

Coke formation results in hot spots in catalyst tubes and can produce characteristic patterns known as *giraffe necking* or *tiger tailing.* It increases pressure drop, reduces conversion of methane, and can cause tube failure. Coking may be partially alleviated by increasing the steam/hydrocarbon ratio to change the reaction conditions, but the most effective solution is to replace the reformer catalyst with one designed for heavier feeds.

Downloaded from Digital Engineering Library @ McGraw-Hill (www.digitalengineeringlibrary.com)
Copyright © 2004 The McGraw-Hill Companies. All rights reserved.
Any use is subject to the Terms of Use as given at the website.

FW HYDROGEN PRODUCTION

In addition to the reforming and shift reactions over reforming catalyst, a number of side reactions occur. Most of these include the production or removal of carbon. Carbon is continuously formed on the catalyst, but ordinarily reacts with steam faster than it can build up. Heavier feeds produce carbon at a much higher rate. Unless the process conditions or the catalyst is changed, the carbon can accumulate.

Standard methane reforming catalyst uses nickel on an alpha-alumina ceramic carrier. The alumina is acidic, which promotes hydrocarbon cracking and can form coke with heavier feeds. Some catalyst formulations use a magnesia/alumina spinel which is more neutral than alpha-alumina. This reduces cracking on the carrier and allows somewhat heavier feedstocks to be used—typically into the LPG range. The drawbacks to this approach include difficulty in reducing the catalyst unless there is a supply of hydrogen in the reducing gas, and the possible damage to the catalyst by hydration of the catalyst during start-up.

Further resistance to coking can be achieved by adding an alkali promoter, typically some form of potash (KOH), to the catalyst. Besides reducing the acidity of the carrier, the promoter catalyzes the reaction of steam and carbon. While carbon continues to be formed, it is removed faster than it can build up. This approach can be used with naphtha feedstocks up to a boiling point of 350°F (about 180°C).

Under the conditions in a fired reformer, potash is volatile, and it is incorporated into the catalyst as a more complex compound which slowly hydrolyzes to release KOH. The promoted catalyst is used only in the top half of the catalyst tubes, since this is where the hydrocarbon content, and the possibility of coking, is the highest. In addition, this keeps the potash out of the hottest part of the tube, reducing potash migration.

Alkalized catalyst allows the use of a wide range of feedstocks, but it does have drawbacks. In addition to possible potash migration, which can be minimized by proper design and operation, the catalyst is somewhat less active than conventional catalyst.

Prereforming. Another option to reduce coking in steam reformers is to use a prereformer. This uses a fixed bed of very active catalyst, operating at a lower temperature, upstream of the fired reformer[1] (Fig. 6.1.6). Inlet temperatures are selected so that there is minimal risk of coking. Gas leaving the prereformer contains only steam, hydrogen, carbon oxides, and methane. This allows a standard methane catalyst to be used in the fired reformer. This approach has been used with feedstocks up to light kerosene. The drawback to this approach is the need for a separate prereformer reactor and a more complicated preheat train.

Since the gas leaving the prereformer poses reduced risk of coking, this also makes the fired reformer more "forgiving." Variations in catalyst activity and heat flux in the primary reformer become less critical.

Besides its use for feedstock flexibility, a prereformer can be used to reduce the fuel consumption and steam production of the reformer. Since the prereformer outlet gas does not contain heavier hydrocarbons, it can be reheated to a higher temperature than the original feedstock without the risk of carbon formation. The higher preheat temperature reduces the radiant duty and fuel consumption as well as steam production.

Reformer Design

Equipment Configuration. Designs for steam reforming furnaces must deal with the problems caused by the extremely high process temperatures. These include thermal expansion, cracking, and overheating. The high temperatures also mean the use of exotic alloys; as an example, a common tube material is HP-45, which contains 25 percent chrome and 35 percent nickel, with the element niobium added to stabilize the grain structure.

Downloaded from Digital Engineering Library @ McGraw-Hill (www.digitalengineeringlibrary.com)
Copyright © 2004 The McGraw-Hill Companies. All rights reserved.
Any use is subject to the Terms of Use as given at the website.

FW HYDROGEN PRODUCTION

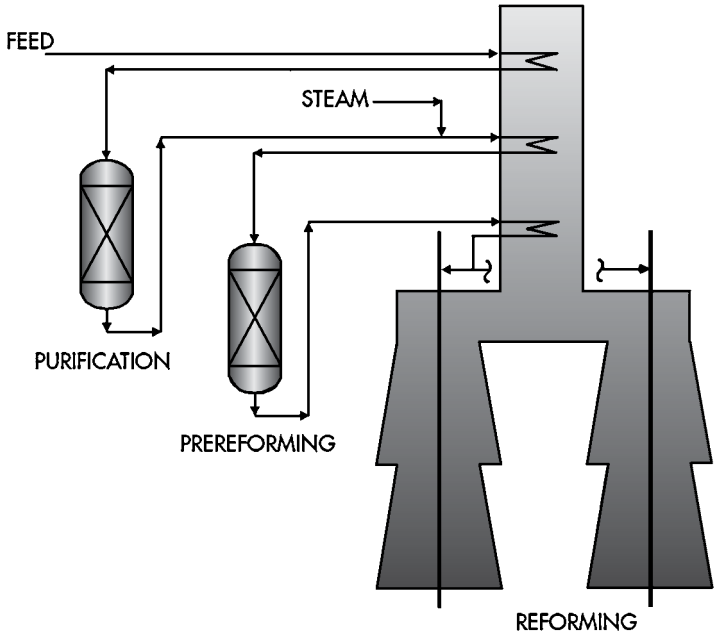

FIGURE 6.1.6 Prereformer flow scheme.

Tube expansion at reforming temperatures is approximately 10 in (250 mm) for a typical 40-ft (12-m) tube. This expansion is taken up at the cold end of the tube by connecting the tubes to the inlet header with long, relatively flexible tubes called pigtails. A counterweight system is used to support the tube and ensure that the tube is kept in constant tension to prevent bowing.

The combination of light feedstock and the good thermal conductivity of hydrogen allow the use of high flux rates, typically above 20,000 Btu/(h · t^2) [63,000 W/m^2]. This in turn requires that heat flux be very uniform to avoid hot spots. In larger furnaces, firing is from both sides of the tube, and measures are taken to ensure that heat flux is relatively uniform over the length of the tube. This may be done by using a radiant wall design such as a terrace wall unit, or positioning the flame next to the coldest part of the tube in down-fired units.

Since catalyst is packed into the tubes, many multiple passes are used to keep pressure drop to a manageable level. There are several hundred parallel passes in a large furnace. Careful packing of the catalyst into the tubes ensures even flow distribution.

Several reformer configurations have evolved to deal with these factors: Terrace Wall, side-fired, down-fired, and bottom-fired furnaces are used. These designs are summarized below.

Terrace Wall. Foster Wheeler's Terrace Wall reformer was developed to handle the high temperatures and high heat fluxes used in steam reforming. This design uses a long, relatively narrow firebox, with the tubes in a single row down the center (Figs. 6.1.7 to 6.1.9). The burners are located in terraces along the sides and fire upward against sloping, refractory-lined walls. Generally two terraces are used. The hot refractory then radiates heat to the tubes, resulting in a very uniform, controlled heat

Downloaded from Digital Engineering Library @ McGraw-Hill (www.digitalengineeringlibrary.com)
Copyright © 2004 The McGraw-Hill Companies. All rights reserved.
Any use is subject to the Terms of Use as given at the website.

FW HYDROGEN PRODUCTION

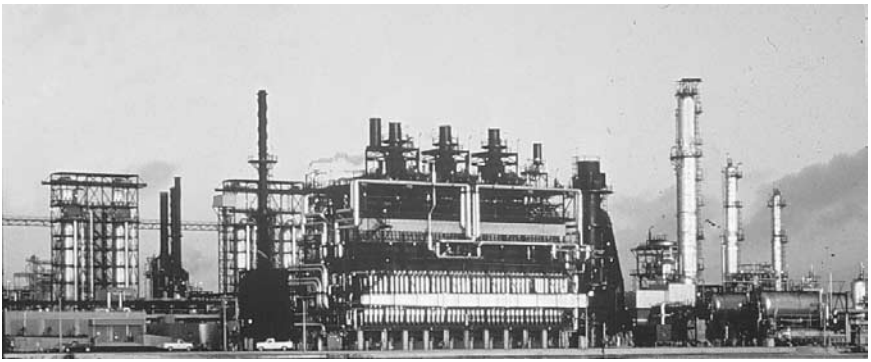

FIGURE 6.1.7 This Terrace Wall reformer located in a North American refinery produces more than 120 million SCFD of hydrogen from natural gas or light refinery gas.

distribution. This helps to avoid localized overheating and carbon laydown. The process gas flow is downward, and the flue gas flow upward. The convection section is located above the radiant section. Larger furnaces often use two radiant cells, located side by side and sharing a common convection section.

The radiant wall design provides uniform heat flux and is resistant to localized overheating, even in the event of catalyst coking. The vertical stacking of the furnace, with the convection section located above the radiant section, results in smaller plot area for most sizes.

The updraft arrangement minimizes power required for fans, and the furnace can be designed to operate in natural draft, without fans.

Side-Fired. This design is similar to the Terrace Wall furnace, with burners located at multiple levels (often six levels). Special burners are used to direct the flames back against the walls. It is possible to get additional control of firing from the larger number of burners.

Down-Fired. This design uses burners located on the roof of the furnace, firing downward (Fig. 6.1.10). Multiple rows of tubes are used, alternating with rows of burners. Special burners are used to ensure the proper flame pattern. This is required in order to get good heat distribution along the length of the tube. Both process gas and flue gas flow is downward.

The multiple rows allow reduced cost for extremely large units, as is required in large methanol or ammonia plants. The convection section is located at grade; this allows good fan access and more stable fan mounting but increases the plot area required. Fewer (but larger) burners are required.

Cylindrical. The furnace is in the shape of a vertical cylinder, with burners located in the center of the floor. The tubes are arranged in a ring around the burners. Ample spacing between the tubes allows radiation to be reflected from the furnace walls and to reach the backs of the tubes, in order to provide good heat distribution. Both process gas and flue gas flow is upward.

This design is used for smaller units, with an upper plant size limit of 5 to 10 million SCFD [5500 to 11,000 (N) m^3/h] of hydrogen with a single reformer. Since the hot end of the tubes is at the top, the tubes can be anchored at the top and expand downward. The counterweights or spring hangers used on larger units are not necessary, reducing the cost of the furnace. These units are generally shop-fabricated. Size is therefore limited by shipping restrictions.

Downloaded from Digital Engineering Library @ McGraw-Hill (www.digitalengineeringlibrary.com)
Copyright © 2004 The McGraw-Hill Companies. All rights reserved.
Any use is subject to the Terms of Use as given at the website.

FW HYDROGEN PRODUCTION

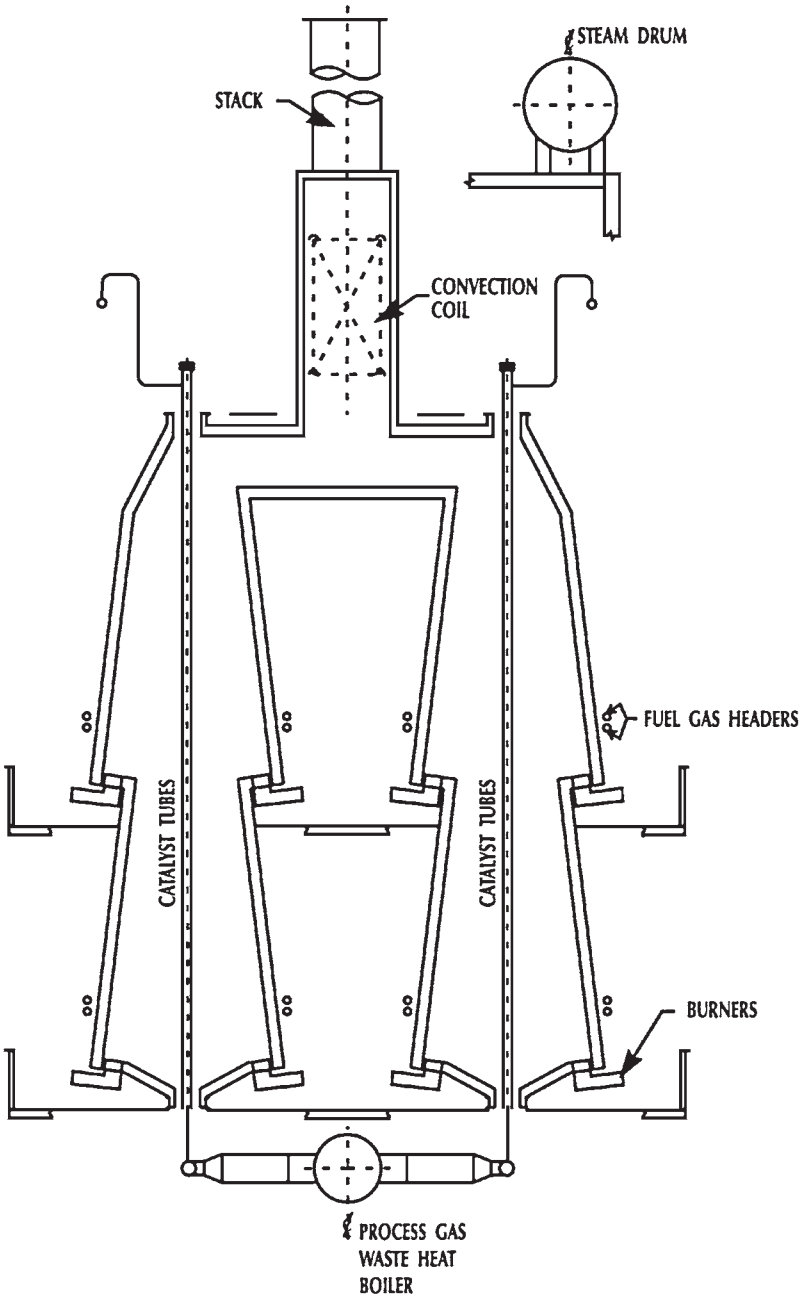

FIGURE 6.1.8 Natural-draft reformer.

Downloaded from Digital Engineering Library @ McGraw-Hill (www.digitalengineeringlibrary.com)
Copyright © 2004 The McGraw-Hill Companies. All rights reserved.
Any use is subject to the Terms of Use as given at the website.

FW HYDROGEN PRODUCTION

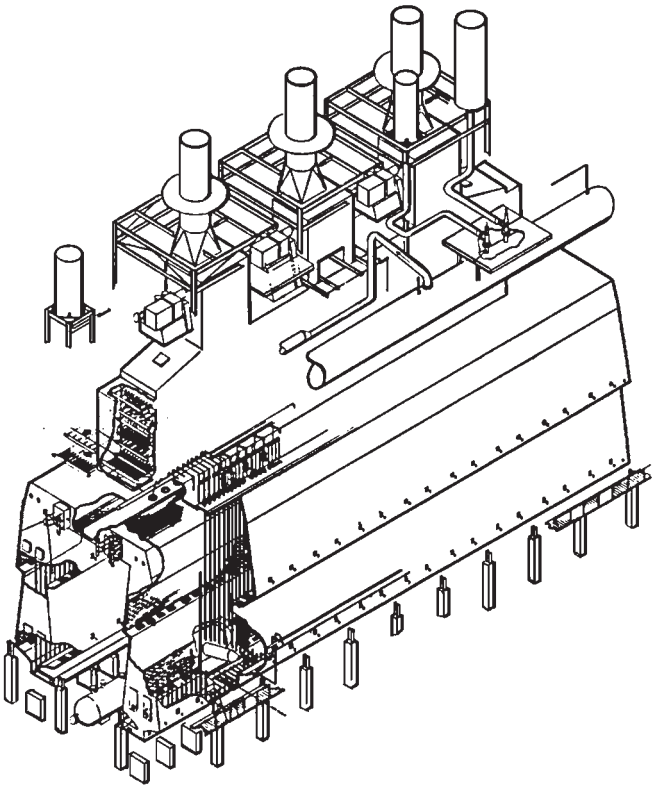

FIGURE 6.1.9 Terrace Wall reformer.

Plant Operation

Several operations are characteristic of hydrogen plants. They include loading catalyst into the reformer tubes, measuring tube metal temperatures, and pinching off of catalyst tubes.

Catalyst Loading. The goal of catalyst loading is to fill the 40-ft-long (12-m-long) tubes completely, without voids and without fracturing any of the catalyst rings. Early reformers were loaded by filling the tubes with water and dumping the catalyst in. This was discontinued after it was found that on start-up, water trapped inside the catalyst turned to steam and fractured the rings.

Traditionally, loading has been done by first loading the catalyst into cloth tubes, known as socks, and then lowering the socks into the tubes. By manipulating the rope, the catalyst is dumped, falling only a few inches. This is a slow process, requiring vibration of the tubes to eliminate voids and careful measurement of the tube pressure drop and volume loaded into each tube to ensure consistency.

Catalyst Tube Temperature Measurement. As hydrogen plant technology has matured, competitive pressures have made it necessary to operate plants closer to their limits, including temperature limits on the catalyst tubes. To avoid tube failures, many plants now monitor tube metal temperatures each day, or even each shift. Optical

Downloaded from Digital Engineering Library @ McGraw-Hill (www.digitalengineeringlibrary.com)
Copyright © 2004 The McGraw-Hill Companies. All rights reserved.
Any use is subject to the Terms of Use as given at the website.

FW HYDROGEN PRODUCTION

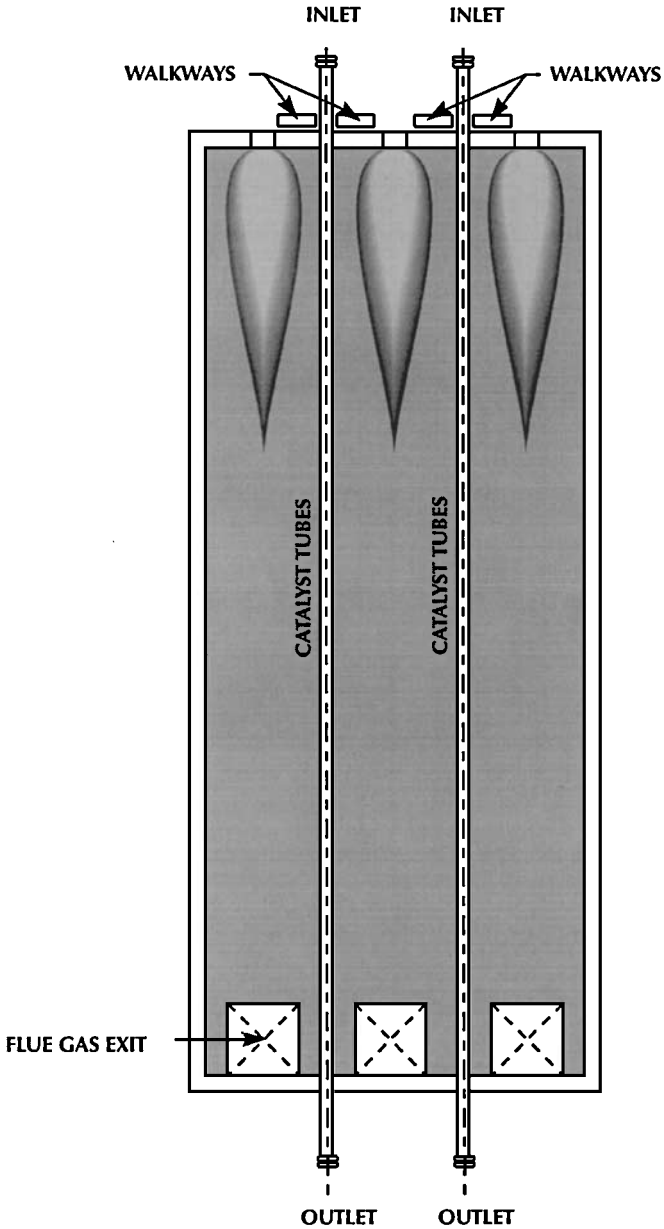

FIGURE 6.1.10 Down-fired reformer.

Downloaded from Digital Engineering Library @ McGraw-Hill (www.digitalengineeringlibrary.com)
Copyright © 2004 The McGraw-Hill Companies. All rights reserved.
Any use is subject to the Terms of Use as given at the website.

FW HYDROGEN PRODUCTION

(actually infrared) pyrometers are used to measure catalyst tube temperatures, since thermocouples do not survive the 1700 to 1800°F (930 to 980°C) conditions.

Besides measuring metal temperatures, it is important to identify variations in temperature which may indicate catalyst problems. Catalyst deactivation will raise the tube temperature, as it becomes necessary to fire harder to reach the same conversion. Poisoning also often causes variations in catalyst activity, leading to hot spots on the tubes and distinctive patterns, known as tiger tailing or giraffe necking. Catalyst breakup from thermal cycling can also cause similar patterns, as well as hot tubes from plugging.

Whether one is measuring temperature or identifying patterns, accurate readings require a clear view of the catalyst tubes, preferably from a direction perpendicular to the metal surface. The Terrace Wall or side-fired furnaces provide an advantage in this case, since most furnaces include viewing ports to allow measurement of temperature on virtually all tubes. The multiple tube rows common in down-fired furnaces require viewing from the end of the tube rows, making accurate measurement difficult.

Tube Damage and Pinching. The life of the catalyst tubes depends to a large extent on the condition of the catalyst, which in turn is subject to damage by poisoning or mechanical stress. Poisoning is possible from sulfur or chlorides, in either the feedstock or low-quality steam, while mechanical stress is usually from thermal cycling. The metal tubes have a higher coefficient of thermal expansion than does the catalyst. As the tubes heat up, they expand and the catalyst settles farther down the tube. When the tube cools, it contracts and the catalyst is fractured. After a number of cycles, the catalyst can break up, plugging the tube or forming voids.

Breakup from thermal cycling can be aggravated by high pressure drop in the catalyst tubes. A smaller tube diameter can reduce furnace cost, since catalyst volume and tube weights are reduced for a given tube surface area. However, pressure drop is increased at smaller diameters, leading to greater stress on the catalyst. During process upsets it becomes easier to exceed the crush strength of the catalyst, and the catalyst fractures.

As the condition of the catalyst worsens, hot spots can develop in tubes and the tube can rupture. Shutting down the furnace at this point to repair the tubes would lead to lost production as well as extra heating/cooling cycles. Individual tubes can be isolated on line to seal them off and continue operation. This is done by pinching the pigtails shut with a hydraulic clamp while the unit is operating. Many operators shut off hydrocarbon feed while this is done, keeping steam flowing to the tubes.

The tubes themselves are also subject to damage from thermal cycling. As the tubes heat up, the outside and hotter part of the tube wall expands more than the inner portion, leading to high stress levels. The metal will creep in operation, normalizing the stress. The process is then reversed when the tube cools. Continued cycling can lead to cracks.

INTEGRATION INTO THE MODERN REFINERY

Purification

A wide variety of processes are used to purify hydrogen streams.[4,5] Since the streams are available at a wide variety of compositions, flows, and pressures, the best method of purification will vary.

Factors which must be considered in selecting a purification method include

- Cost (investment and operating)
- Hydrogen recovery

Downloaded from Digital Engineering Library @ McGraw-Hill (www.digitalengineeringlibrary.com)
Copyright © 2004 The McGraw-Hill Companies. All rights reserved.
Any use is subject to the Terms of Use as given at the website.

FW HYDROGEN PRODUCTION

- Product purity
- Pressure profile
- Turndown
- Proven reliability

Wet Scrubbing. Wet scrubbing systems, particularly amine or potassium carbonate systems, are used for removal of acid gases such as H_2S or CO_2. Most depend on chemical reaction and can be designed for a wide range of pressures and capacities. They were once widely used to remove CO_2 in steam reforming plants, but have generally been replaced by PSA units except where CO_2 is to be recovered. They are still used to remove H_2S and CO_2 in partial oxidation plants.

Wet scrubbing systems remove only acid gases or heavy hydrocarbons, but not methane or other light gases, hence have little influence on product purity. Therefore, wet scrubbing systems are most often used as a pretreatment step, or where a hydrogen-rich stream is to be desulfurized for use as fuel gas.

PSA. Pressure-swing adsorption uses beds of solid adsorbent to separate impure hydrogen streams into a very pure high-pressure product stream and a low-pressure tail gas stream containing the impurities and some of the hydrogen. The beds are then regenerated by depressuring and purging (Figs. 6.1.11 and 6.1.12). Part of the hydrogen—typically 10 to 20 percent—is lost into the tail gas.

The cost of the system is relatively insensitive to capacity. This makes PSA more economic at larger capacities, while membrane units tend to be favored for smaller plants.

PSA is generally the first choice for steam reforming plants because of its combination of high purity, moderate cost, and ease of integration into the hydrogen plant. It is also often used for purification of refinery offgases, where it competes with membrane systems.

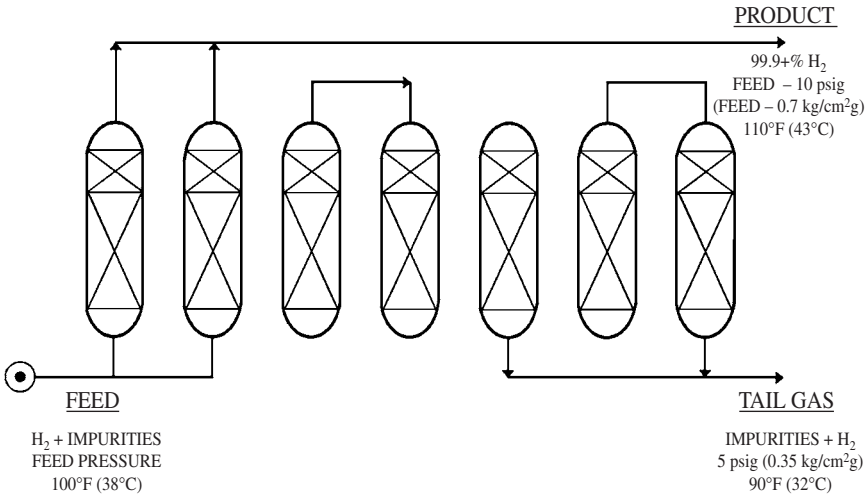

FIGURE 6.1.11 This figure illustrates the flow through a PSA unit for the different steps in the cycle. In the first step impure hydrogen enters the bottom of the bed, with pure hydrogen leaving the top. In the next step pure hydrogen is recovered as the bed is partially depressurized into another bed at lower pressure. These "equalizations" are a key to the high recovery of hydrogen in modern PSA units. The bed is then vented to the tail gas system and purged with pure hydrogen from another bed.

Downloaded from Digital Engineering Library @ McGraw-Hill (www.digitalengineeringlibrary.com)
Copyright © 2004 The McGraw-Hill Companies. All rights reserved.
Any use is subject to the Terms of Use as given at the website.

FW HYDROGEN PRODUCTION

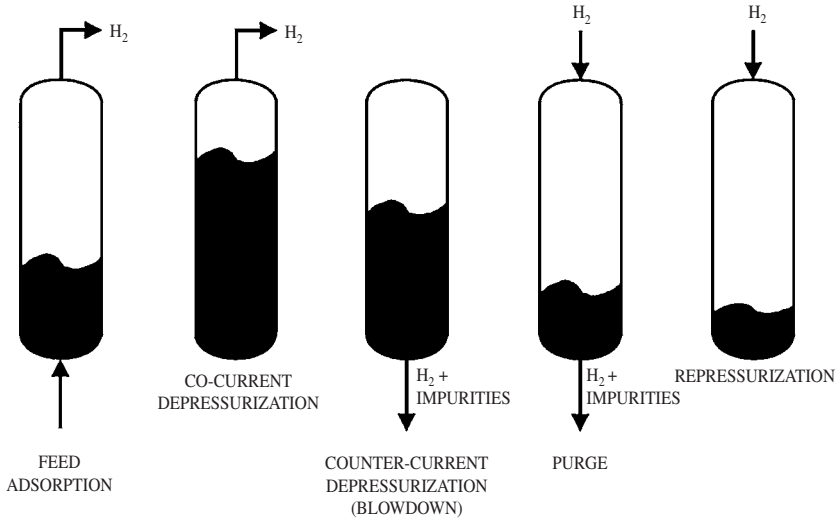

FIGURE 6.1.12 PSA process steps.

Turndown is simple to about 30 percent of flow, where it is limited by the accuracy of flow measurement. Systems can be designed to go somewhat lower by adding low-range transmitters. Reliability is very high.

It is not generally economic to design a PSA unit to process both synthesis gas from steam reforming and hydrogen/hydrocarbon gas. Doing so causes problems with both the fuel balance and the adsorbents. Tail gas from the steam reforming unit consists largely of CO_2 and is returned at low pressure to the reformer furnace as fuel. The plant fuel balance requires that the tail gas from the hydrocarbon PSA be compressed into the fuel system. Combining these two units would result in too much fuel gas to supply the reformer furnace, with much of the CO_2 from the synthesis gas being compressed into the refinery fuel system. In addition, the adsorbents for the two systems are different, and combining them would affect the hydrogen recovery.

Membranes. Membrane units separate gases by taking advantage of the difference in rates of diffusion through membranes. Gases which diffuse faster (including hydrogen) become the permeate stream and are available at low pressure. The slower gases become the nonpermeate and leave the unit at close to feed pressure.

Membrane units contain no moving parts or switch valves and have potentially very high reliability. The major threat is from components in the gas (such as aromatics), which attack the membranes, or from liquids, which plug them.

Membranes are fabricated in relatively small modules; for larger capacity more modules are added. Cost is therefore virtually linear with capacity, making them more competitive at lower capacities.

Design of membrane systems involves a trade-off between pressure drop (or diffusion rate) and surface area, as well as between product purity and recovery. As the surface area is increased, the recovery of fast components increases; however, more of the slow components are recovered, which lowers the purity. Operating them at turndown changes the relationship between diffusion rate and surface area; modules may be taken out of service to keep conditions constant.

Downloaded from Digital Engineering Library @ McGraw-Hill (www.digitalengineeringlibrary.com)
Copyright © 2004 The McGraw-Hill Companies. All rights reserved.
Any use is subject to the Terms of Use as given at the website.

FW HYDROGEN PRODUCTION

Cryogenic Separation. Cryogenic separation units operate by cooling the gas and condensing some of or all the gas stream. Depending on the product purity required, separation may be by simple flashing or by distillation. Cryogenic units tend to be more expensive than other processes, especially in smaller sizes. This is so partly because of the feed pretreatment required to remove compounds which would freeze, such as water or CO_2. They are therefore used either in very large sizes or where they offer a unique advantage, such as the ability to separate a variety of products from a single feed stream. One example is the separation of light olefins from an FCC gas.

Hydrogen recovery is in the range of 95 percent, with purity above 98 percent obtainable. Once the material has been condensed, additional fractionation is relatively cheap.

Feedstocks

The best feedstocks for steam reforming are light, saturated, and low in sulfur; this includes natural gas, refinery gas, LPG, and light naphtha. These feeds can be converted to hydrogen at high thermal efficiency and low capital cost.

Natural Gas. Natural gas is the most common hydrogen plant feed, since it meets all the requirements for reformer feed and is low in cost. A typical pipeline natural gas (Table 6.1.8) contains over 90 percent C_1 and C_2, with only a few percent of C_3 and heavier hydrocarbons. It may contain traces of CO_2, with often significant amounts of N_2. The N_2 will affect the purity of the product hydrogen: It can be removed in the PSA unit if required, but at increased cost.

Purification of natural gas, before reforming, is usually relatively simple. Traces of sulfur must be removed to avoid poisoning the reformer catalyst, but the sulfur content is low and generally consists of H_2S plus some mercaptans. Zinc oxide, often in combination with hydrogenation, is usually adequate.

Refinery Gas. Light refinery gas, containing a substantial amount of hydrogen, can be an attractive steam reformer feedstock. Since it is produced as a by-product, it may be available at low cost. Processing of refinery gas will depend on its composition, particularly the levels of olefins and of propane and heavier hydrocarbons.

Olefins can cause problems by forming coke in the reformer. They are converted to saturated compounds in the hydrogenator, giving off heat. This can be a problem if the olefin concentration is higher than about 5 percent, since the hydrogenator will overheat. A recycle system can be installed to cool the reactor, but this is expensive and wastes heat.

TABLE 6.1.8 Typical Natural Gas Composition

Component	Vol %
CH_4	81.0
C_2H_6	10.0
C_3H_8	1.5
C_4H_{10}	0.5
$C_5H_{12}+$	0.2
N_2	5.8
CO_2	1.0
Sulfur (H_2S, RSH)	5 vol ppm
Total	100.0

Note: RSH = mercaptans.

Downloaded from Digital Engineering Library @ McGraw-Hill (www.digitalengineeringlibrary.com)
Copyright © 2004 The McGraw-Hill Companies. All rights reserved.
Any use is subject to the Terms of Use as given at the website.

FW HYDROGEN PRODUCTION

Heavier hydrocarbons in refinery gas can also form coke, either on the primary reformer catalyst or in the preheater. If there is more than a few percent of C_3 and higher compounds, a promoted reformer catalyst should be considered, to avoid carbon deposits.

When hydrogen content is greater than 50 vol % and the gas is at adequate pressure, another option is hydrogen recovery, using a membrane or pressure-swing adsorption unit. The tail gas or reject gas, which will still contain a substantial amount of hydrogen, can then be used as steam reformer feedstock.

Refinery gas from different sources varies in suitability as hydrogen plant feed. Catalytic reformer offgas, as shown in Table 6.1.9, for example, is saturated and very low in sulfur and often has a high hydrogen content. This makes excellent steam reformer feedstock. It can contain small amounts of chlorides. These will poison the reformer catalyst and must be removed.

The unsaturated gas from an FCC or coker, on the other hand, is much less desirable. Besides olefins, this gas contains substantial amounts of sulfur, which must be removed before the gas is used as feedstock. These gases are also generally unsuitable for direct hydrogen recovery, since the hydrogen content is usually too low.

Hydrotreater offgas lies in the middle of the range. It is saturated, so it is readily used as hydrogen plant feed. The content of hydrogen and heavier hydrocarbons depends to a large extent on the upstream pressure. Sulfur removal will generally be required.

The process scheme shown in Fig. 6.1.13 uses three different refinery gas streams to produce hydrogen. First, high-pressure hydrocracker purge gas is purified in a membrane unit. Product hydrogen from the membrane is available at medium pressure and is combined with medium-pressure offgas, which is first purified in a PSA unit. Finally, low-pressure offgas is compressed, mixed with reject gases from the membrane and PSA units, and used as steam reformer feed. The system also includes a recycle loop to moderate the temperature rise across the hydrogenator from the saturation of olefins.

Liquid Feeds. Liquid feeds, either LPG or naphtha, can be attractive feedstocks where prices are favorable. Naphtha is typically valued as low-octane motor gasoline, but at some locations there is an excess of light straight-run naphtha, and it is available cheaply. Liquid feeds can also provide backup feed, if there is a risk of natural gas curtailments.

The feed handling system needs to include a surge drum, feed pump, and vaporizer, usually steam-heated. This will be followed by further heating, before desulfurization. The sulfur in liquid feeds will be in the form of mercaptans, thiophenes, or heavier compounds. These compounds are stable and will not be removed by zinc oxide; therefore a hydrogenator will be required. As with refinery gas, olefins must also be hydrogenated if they are present.

TABLE 6.1.9 Typical Catalytic Reformer Offgas Composition

Component	Volume %
H_2	75.5
CH_4	9.6
C_2H_6	7.6
C_3H_8	4.5
C_4H_{10}	2.0
$C_5H_{12}+$	0.8
Total	100.0

Downloaded from Digital Engineering Library @ McGraw-Hill (www.digitalengineeringlibrary.com)
Copyright © 2004 The McGraw-Hill Companies. All rights reserved.
Any use is subject to the Terms of Use as given at the website.

FW HYDROGEN PRODUCTION

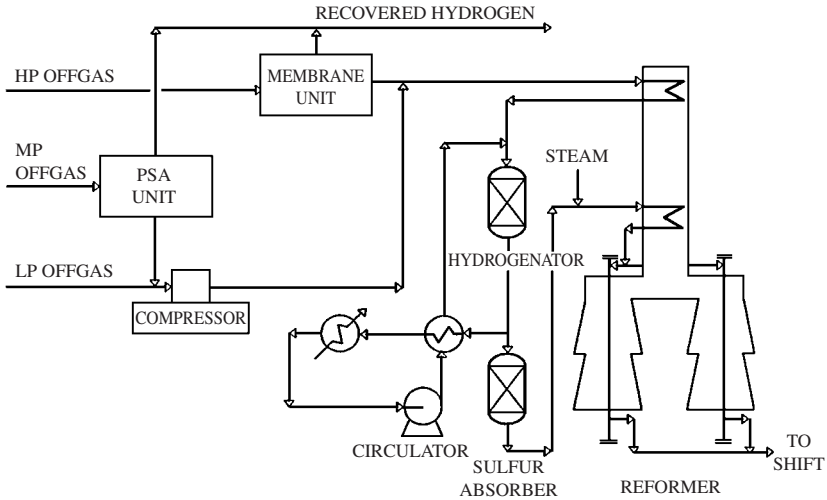

FIGURE 6.1.13 Feed handling and purification with multiple feedstocks.

The reformer will generally use a potash-promoted catalyst to avoid coke buildup from cracking of the heavier feed. If LPG is to be used only occasionally, it is often possible to use a methane-type catalyst at a higher steam/carbon ratio to avoid coking. Naphtha will require a promoted catalyst unless a prereformer is used.

HEAT RECOVERY

In selecting a heat recovery system for a new plant, a number of factors must be balanced: environmental regulations, capital cost, operating cost, and reliability. The relative importance of these will vary from project to project.[2]

The environmental regulations with the greatest impact on plant design are typically NO_x limitations. Other impacts such as SO_x or water emissions are minimal, because low-sulfur fuel is typically used and there are few emissions other than flue gas. The choice of heat recovery system can have a major effect on NO_x production, since both the amount of fuel fired and the flame temperature will be affected. Preheating combustion air will reduce firing, but since NO_x formation is strongly influenced by flame temperature, there will be an overall increase in NO_x formation. Other methods of reducing firing, such as prereforming or heat-exchange reforming, do not affect the flame temperature and will therefore reduce NO_x production. Any of these methods can also be useful if there is a limit on the total amount of fuel fired, such as when a plant is to be expanded under an existing permit.

Capital cost and operability will generally favor steam generation. This is the simplest scheme, and it is favored wherever the additional steam can be used (Table 6.1.10). No additional catalysts are necessary, and if a Terrace Wall or a side-fired reformer is used, it is possible to build the reformer as a natural-draft unit. This eliminates the forced- and induced-draft fans and further improves reliability. In cases where steam has little value, air preheat, prereforming, or heat-exchange reforming will be favored, although capital cost will be increased with these options.

Downloaded from Digital Engineering Library @ McGraw-Hill (www.digitalengineeringlibrary.com)
Copyright © 2004 The McGraw-Hill Companies. All rights reserved.
Any use is subject to the Terms of Use as given at the website.

FW HYDROGEN PRODUCTION

TABLE 6.1.10 Economics of Air Preheat versus Steam Generation*

Effect of air preheat	Fuel fired, million Btu	Steam produced, klb	BFW, klb	Total
Reduction per hour	85.4	45.8		46.6
Unit cost (low fuel cost):	0.95	2.20	0.44	
Cost per hour, $	−81.17	100.66	−20.53	−1.04
Cost per year, $				−8700
Unit cost (high fuel cost):	3.00	5.00	0.70	
Cost per hour, $	−256.33	228.77	−32.65	−60.22
Cost per year, $				−505,800

*Basis: 45 million SCFD [50,000 (N) m^3/h], 8400 h/yr.
Note: BFW = boiler feedwater.

Prereforming

In prereforming, use of a highly active catalyst allows reforming to occur at a lower temperature.[1]

The reformer feedstock is mixed with steam and passed over the prereforming catalyst, as is shown in Fig. 6.1.6. As reforming proceeds, the temperature falls. The gas is then reheated and sent to the primary reformer. For feedstocks heavier than methane, heat of cracking will tend to raise the temperature and can result in a temperature rise for liquid feeds or heavy refinery gases. The technology is well proved, and the catalyst has been used for other applications in naphtha reforming. Other than the reactors, the only additional equipment required is a preheat coil in the reformer.

On the other hand, only a limited amount of heat can be recovered, since the reactor inlet temperature is limited to about 930°F (500°C) to avoid cracking of the feedstock. Much of the savings in energy comes from the ability to reheat the feed to a high temperature. Since the prereformer outlet contains no hydrocarbons heavier than methane, there is little risk of cracking.

The high-activity catalyst is also sensitive to deactivation, and provision must be made to allow catalyst changeout during operation.

Heat-Exchange Reforming

The process gas leaving the reformer can be used as a heat source for additional reforming. Reforming catalyst is packed in the tubes of a heat exchanger, and the primary reformer outlet gas flows in the shell. Various arrangements are used to cope with tube expansion, such as the one shown in Fig. 6.1.14. Here the hot gas from the primary mixes with the gas leaving the open-ended catalyst tubes and then flows along the outside of the catalyst tubes. An advantage of the heat-exchange reformer is that it can reach higher temperatures and recover more heat than the prereformer, although at higher equipment cost.

The temperature in the heat-exchange reformer is lower than that in the primary. The steam/carbon ratio in the heat-exchange reformer can be increased to correct this which affects the reforming equilibrium. This also shifts the reforming heat load to a lower temperature, improving the heat balance.

The main effect of the heat-exchange reformer is to reduce the fuel demand and steam generation. Table 6.1.11 shows this reduction: from 159,000 lb/h (72 MT/h) with the primary reformer alone, to 77,000 lb/h (35 MT/h) with the addition of the heat-exchange

Downloaded from Digital Engineering Library @ McGraw-Hill (www.digitalengineeringlibrary.com)
Copyright © 2004 The McGraw-Hill Companies. All rights reserved.
Any use is subject to the Terms of Use as given at the website.

FW HYDROGEN PRODUCTION

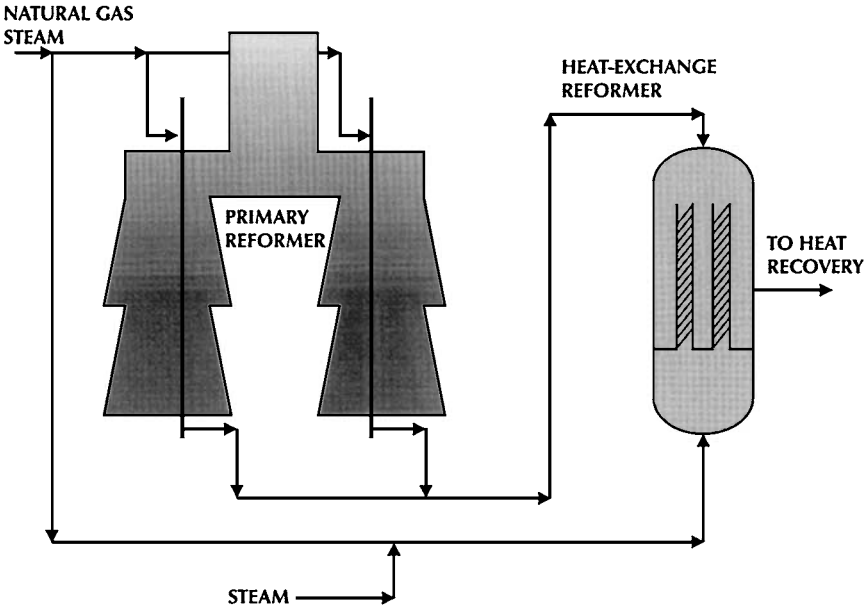

FIGURE 6.1.14 Heat-exchange reforming.

reformer. By combining the heat-exchange reformer with air preheat, there is a further reduction in the steam generation and fuel demand for the plant: Export steam is reduced to 21,000 lb/h.

ECONOMICS

Process Route

Capital costs for hydrogen production are illustrated in Fig. 6.1.15, which compares costs for purification, steam reforming, and partial oxidation. Where hydrogen is already available in sufficient quantity, it is cheapest to merely purify it as required. In most cases this is not sufficient, and it is necessary to manufacture it.

Figure 6.1.15 illustrates why steam reforming is favored over partial oxidation. For light feedstocks, capital costs for the inside battery limit (ISBL) plants are similar for steam reforming or partial oxidation. However, when the cost of oxygen is included, the cost for partial oxidation (POX) rises substantially. Naphtha reforming is slightly higher in capital cost than reforming of natural gas. Feedstock cost will depend on the value of the naphtha; where the naphtha is valued as motor gasoline, as in Fig. 6.1.15, it cannot compete with natural gas. Where there is a surplus of low-octane naphtha, it may be valued at fuel cost or even below; in this case steam reforming of naphtha can be attractive.

For partial oxidation of residual fuel, a substantial amount of equipment is required to handle the soot, ash, and sulfur (Fig. 6.1.4). The cost for this additional equipment, as well as the additional oxygen required, means that heavy oil must be much cheaper than natu-

Downloaded from Digital Engineering Library @ McGraw-Hill (www.digitalengineeringlibrary.com)
Copyright © 2004 The McGraw-Hill Companies. All rights reserved.
Any use is subject to the Terms of Use as given at the website.

FW HYDROGEN PRODUCTION

TABLE 6.1.11 Utility Comparison Heat-Exchange Reformer

	Heat-exchange reformer		
	Base case	Cold air	Air preheat
Hydrogen, million SCFD	50	50	50
Primary reformer, °F	1500	1550	1600
Natural gas, million SCFD:			
Feed	20.9	18.9	17.6
Fuel	1.7	1.2	0.8
Total	22.6	20.1	18.4
Steam export, lb/h	159,000	77,000	21,000

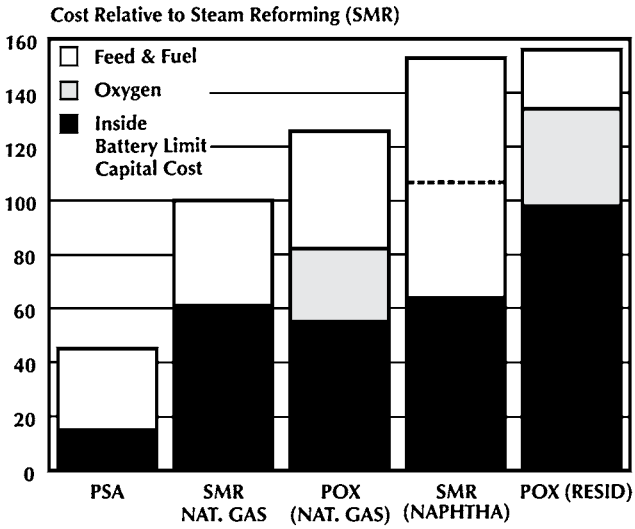

FIGURE 6.1.15 Production cost of different cost process routes. PSA = pressure-swing adsorption; SMR = steam-methane reforming; POX = partial oxidation.

ral gas to justify partial oxidation. Alternatively, partial oxidation may be used as a way to dispose of a stream such as petroleum coke or asphalt, which is considered a waste product.

Capital Cost

Where capacity, feedstock, and method of heat recovery are known for a steam reforming plant, a reasonable estimate may be made of capital cost, typically to an accuracy of ±30 percent. For a 50 million SCFD[56,000 (N) m^3/h] hydrogen plant, based on natural gas feed and using steam generation for heat recovery, capital cost is approximately $30 million.

This assumes a battery limit process unit, including the equipment shown in Fig. 6.1.3, on the U.S. Gulf Coast constructed in second quarter 2002 through mechanical comple-

Downloaded from Digital Engineering Library @ McGraw-Hill (www.digitalengineeringlibrary.com)
Copyright © 2004 The McGraw-Hill Companies. All rights reserved.
Any use is subject to the Terms of Use as given at the website.

FW HYDROGEN PRODUCTION

tion. It also assumes that the site is free of above- and below-ground obstructions. It does not include the cost of land, taxes, permits, warehouse parts, escalation, catalyst, and support facilities.

Make or Buy

In recent years refiners have been presented with a viable alternative to building their own hydrogen plant. It is possible to buy hydrogen like a utility "over the fence" from one of the major industrial gas companies. These companies typically have experience producing and selling many industrial gases such as hydrogen, nitrogen, and oxygen, and several have pipeline networks which can provide additional reliability and economies of scale.

Revamps

Changes to refinery product or feedstock slates often require incremental increases in hydrogen production. Especially with older plants, it may often be feasible to get this extra capacity by revamping an existing unit.

Bottlenecks to increased capacity typically fall into one or more of the following areas: the reformer, CO_2 removal, or hydraulics/compression. Heat transfer is typically less of a problem, and changes here are often integrated with improving the plant hydraulics.

A number of the developments already mentioned can be used to increase capacity. For example, improved catalyst tube metallurgy can allow operation at higher reformer temperatures and lower steam/carbon ratio. The reduced steam flow then allows operation at higher hydrogen production rates.

In wet scrubbing plants, a change in solution composition or tower internals can allow more gas through the same towers.

Increasing capacity of an existing PSA unit may also be attractive, but here the situation is more complex. The economics of PSA systems depend on moving gas from one absorber to another during the depressuring/repressuring steps. Because of this they are highly integrated, and a revamp may involve changing adsorbent, modifying cycles, adding beds, or increasing the size of existing piping and valves.

One option that has not proved viable is the replacement of wet scrubbing systems with PSA units. Because of the loss of hydrogen into the PSA tail gas, this actually would reduce the capacity of the plant.

UTILITY REQUIREMENTS

Typical utility requirements for a 50 million SCFD hydrogen plant feeding natural gas are as follows (no compression is required).

Feedstock	730 million Btu/h (770 GJ/h)
Fuel	150 million Btu/h (158 GJ/h)
Export steam, 600 lb/in^2 gage/700°F	120,000 lb/h (54 MT/h)
BFW	160,000 lb/h (72 MT/h)
Cooling water	900 gal/min (200 m^3/h)
Electricity	400 kW

Downloaded from Digital Engineering Library @ McGraw-Hill (www.digitalengineeringlibrary.com)
Copyright © 2004 The McGraw-Hill Companies. All rights reserved.
Any use is subject to the Terms of Use as given at the website.

FW HYDROGEN PRODUCTION

REFERENCES

1. B. J. Cromarty, K. Chlapik, and D. J. Ciancio, "The Application of Pre-reforming Technology in the Production of Hydrogen," NPRA Annual Meeting, San Antonio, Tex., March 1993.

2. J. D. Fleshman, *Chem. Eng. Prog.,* **89**(10), 20 (1993).

3. A. Fuderer, "Catalytic Steam Reforming of Hydrocarbons," U.S. patent 4,337,170, June 29, 1982.

4. M. H. Hiller, G. Q. Miller, and J. J. Lacatena, "Hydrogen for Hydroprocessing Operations," NPRA Annual Meeting, San Antonio, Tex., March 1987.

5. G. Q. Miller and J. Stoecker, "Selection of a Hydrogen Separation Process," NPRA Annual Meeting, San Francisco, March 1989.

6. *Physical and Thermodynamic Properties of Elements and Compounds,* United Catalysts, Inc., Louisville, Ky.

7. M. V. Twigg, *Catalyst Handbook,* 2d ed., Wolfe Publishing, London, 1989.

8. G. J. Lambert, W. J. A. H. Schoeber, and H. J. A. Van Helden, "The Hydrogen Balance in Refineries," Foster Wheeler Heavy Oil Processing and Hydrogen Conference, Noordwijk, The Netherlands, April 1994.

Downloaded from Digital Engineering Library @ McGraw-Hill (www.digitalengineeringlibrary.com)
Copyright © 2004 The McGraw-Hill Companies. All rights reserved.
Any use is subject to the Terms of Use as given at the website.

Downloaded from Digital Engineering Library @ McGraw-Hill (www.digitalengineeringlibrary.com)
Copyright © 2004 The McGraw-Hill Companies. All rights reserved.
Any use is subject to the Terms of Use as given at the website.

Source: HANDBOOK OF PETROLEUM REFINING PROCESSES

P · A · R · T · 7

HYDROCRACKING

Downloaded from Digital Engineering Library @ McGraw-Hill (www.digitalengineeringlibrary.com)
Copyright © 2004 The McGraw-Hill Companies. All rights reserved.
Any use is subject to the Terms of Use as given at the website.

Downloaded from Digital Engineering Library @ McGraw-Hill (www.digitalengineeringlibrary.com)
Copyright © 2004 The McGraw-Hill Companies. All rights reserved.
Any use is subject to the Terms of Use as given at the website.

Source: HANDBOOK OF PETROLEUM REFINING PROCESSES

CHAPTER 7.1
ISOCRACKING—HYDROCRACKING FOR SUPERIOR FUELS AND LUBES PRODUCTION

Alan G. Bridge* **and Ujjal K. Mukherjee**
Chevron Lummus Global
Richmond, California, and Bloomfield, New Jersey

Hydrocracking technology plays the major role in meeting the need for cleaner-burning fuels, effective feedstocks for petrochemical operations, and more effective lubricating oils. Only through hydrocracking can heavy fuel oil components be converted to transportation fuels and lubricating oils whose quality will meet tightening environmental and market demands.

The Chevron Lummus Global Isocracking process, widely licensed for more than 40 years, has technological advantages for gasoline, middle-distillate, and lubricating oil production. Optimizing a refinery is always a matter of balance. Every benefit has a cost; every incremental gain in margin trades off against a loss somewhere else. Isocracking helps with this balance by delivering trade-off advantages with respect to product yield, quality, catalyst choice and run length, capital costs, operating costs, versatility, and flexibility. Through its families of amorphous and zeolitic catalysts, Isocracking provides refiners with essential flexibility in choices of crude to buy, products to sell, specifications to meet, configurations to use, and efficiency and profitability to achieve, all with the *trade-off advantage.* This chapter explains the process technology that provides these benefits.

ISOCRACKING CHEMISTRY

Chevron's Lummus Global's hydrocracking process was named Isocracking because of the unusually high ratio of isoparaffins to normal paraffins in its light products. A high percentage of isoparaffins increases light naphtha product octane numbers and produces outstanding middle-distillate cold flow properties—kerosene/jet fuel freeze point and diesel pour point. In 1992, Chevron enhanced its process capabilities in heavy paraffin isomerization by commercializing the Chevron Lummus Global Isodewaxing† process. When

*Deceased
†Trademark of Chevron Lummus Global.

Downloaded from Digital Engineering Library @ McGraw-Hill (www.digitalengineeringlibrary.com)
Copyright © 2004 The McGraw-Hill Companies. All rights reserved.
Any use is subject to the Terms of Use as given at the website.

ISOCRACKING—HYDROCRACKING FOR SUPERIOR FUELS AND LUBES PRODUCTION

combined with hydrocracking, Isodewaxing is the most efficient way to produce high-viscosity-index (VI), low-pour-point lube oil base stocks.

Isocracking provides a unique combination of aromatic saturation and paraffin isomerization which generates an attractive combination of product qualities (see Table 7.1.1). The process removes heavy aromatic compounds and produces middle distillates with outstanding burning qualities—high kerosene/jet fuel smoke points and high diesel cetane numbers. The heavy product is rich in hydrogen, making it a prime candidate for feedstock to lube oil facilities, ethylene crackers, or fluid catalytic cracking (FCC) plants.

When combined with other Chevron Lummus Global processes such as Isotreating (for the processing of light distillates), Isodewaxing or LC-Fining (for the processing of vacuum residuum), Isocracking can be used to process everything from residuum to cracked distillate stocks for the production of very high-quality middle distillates, LPG, finished lube base stocks, naphtha and low-sulfur fuel oils in addition to feeds for FCC or petrochemicals units.

THE IMPORTANCE OF HYDROGEN

Hydrocracking removes the undesirable aromatic compounds from petroleum stocks by the addition of hydrogen. The amount of hydrogen required depends on the character of the feedstock.

Isocracking produces cleaner fuels and more effective lubricants from a wide variety of petroleum stocks, different crude oil sources, and, in some cases, heavy oils generated by different processing routes. These technical challenges can be illustrated by focusing on feed and product hydrogen contents using a Stangeland diagram,[1] as shown in Fig. 7.1.1. This relates the hydrogen content of hydrocarbons to their molecular weight and provides a road map for all hydrocarbons present in petroleum stocks. By comparing the characteristics of feedstocks and products, the processing schemes required to go from one to the other can be represented.

The upper line of Fig. 7.1.1 represents the hydrogen content of pure paraffins, which have the highest hydrogen content of any hydrocarbon series. Aromatic compounds have much lower hydrogen content and fall considerably below the paraffin line. This diagram shows regions that meet the specifications for the most important refined products—motor gasoline, jet/kerosene, diesel, and lubricating oils. The regions for middle distillate and lubes all border the paraffin line. Aromatic compounds hurt the qualities of these products. The motor gasoline region is more complex because both hydrogen-rich isoparaffins and hydrogen-poor aromatics improve octane numbers.

The Isocracking process handles variations in feedstocks easily. Table 7.1.2 shows some of the important properties of the straight-run distillates from four popular crude oils:

TABLE 7.1.1 Product Quality from Isocracking

Isocracking removes heavy aromatic compounds and creates isoparaffins to produce middle distillates with outstanding burning and cold flow properties.

- Kerosene with low freeze points and high smoke points
- Diesel fuels with low pour points and high cetane numbers
- Heavy naphthas with a high content of single-ring hydrocarbons
- Light naphthas with a high isoparaffin content
- Heavy products that are hydrogen-rich for feeding FCC units, ethylene plants, or lube oil dewaxing and finishing facilities

Downloaded from Digital Engineering Library @ McGraw-Hill (www.digitalengineeringlibrary.com)
Copyright © 2004 The McGraw-Hill Companies. All rights reserved.
Any use is subject to the Terms of Use as given at the website.

ISOCRACKING—HYDROCRACKING FOR SUPERIOR FUELS AND LUBES PRODUCTION

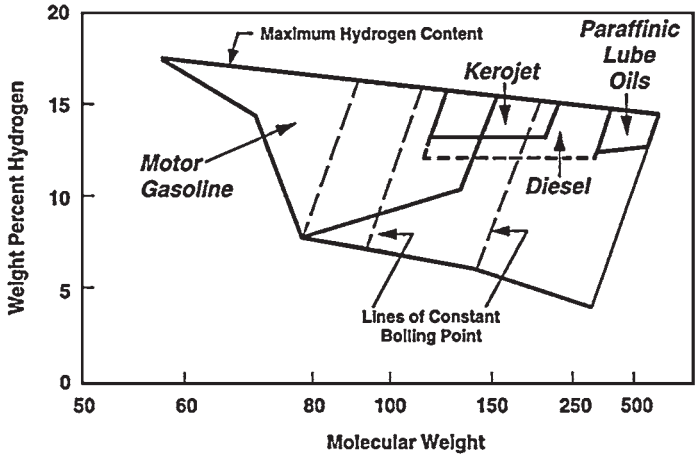

FIGURE 7.1.1 Stangeland diagram showing product hydrogen content. Regions that meet the specifications for jet/kerosene, diesel, and lube products all border the paraffin line. Aromatic compounds hurt the quality of these products.

TABLE 7.1.2 Crude Oil Distillate Qualities

Each crude oil contains distillates of different sulfur levels and burning qualities.

	Boiling range						
°F	400–500	500–650		650–800		800–1000	
°C	204–260	260–343		343–427		427–538	
Inspection	Smoke point, mm	Sulfur, wt %	Cetane index	Sulfur, wt %	Viscosity index	Sulfur, wt %	Viscosity index
Arabian light	22	1.3	51	2.2	65	2.7	55
Sumatran light	27	0.1	60	0.1	75	0.1	60
Chinese (Shengli)	20	0.4	52	0.6	40	0.7	26
Russian (West Siberia)	20	1.1	49	1.8	46	2.3	35

Arabian light, Sumatran light, Chinese (Shengli), and Russian (Western Siberia). Kerosene smoke point, diesel cetane, and vacuum gas oil VIs reflect the overall aromatic nature of the crude oil. Sumatran light is uniquely paraffinic and has the highest hydrogen content. The sulfur levels of the distillates from these different crude oils are also shown. Environmental pressures continue to push product sulfur levels down. Although the Stangeland diagram does not include this important contaminant, sulfur occurs primarily in the aromatic component of the feedstock. Isocracking effectively eliminates sulfur as it saturates and cracks the heavy aromatics.

The hydrogen contents of kerosene/jet, diesel, and lube products are shown in Fig. 7.1.2. Again, the paraffinic nature of the Indonesian crude oil is clearly shown. The Russian and Arabian distillates are much more deficient in hydrogen in the vacuum gas oil boiling range. Shengli distillates show less variation in hydrogen content from light to heavy distillates compared to the Russian and Arabian stocks. The refiner's challenge is to

Downloaded from Digital Engineering Library @ McGraw-Hill (www.digitalengineeringlibrary.com)
Copyright © 2004 The McGraw-Hill Companies. All rights reserved.
Any use is subject to the Terms of Use as given at the website.

ISOCRACKING—HYDROCRACKING FOR SUPERIOR FUELS AND LUBES PRODUCTION

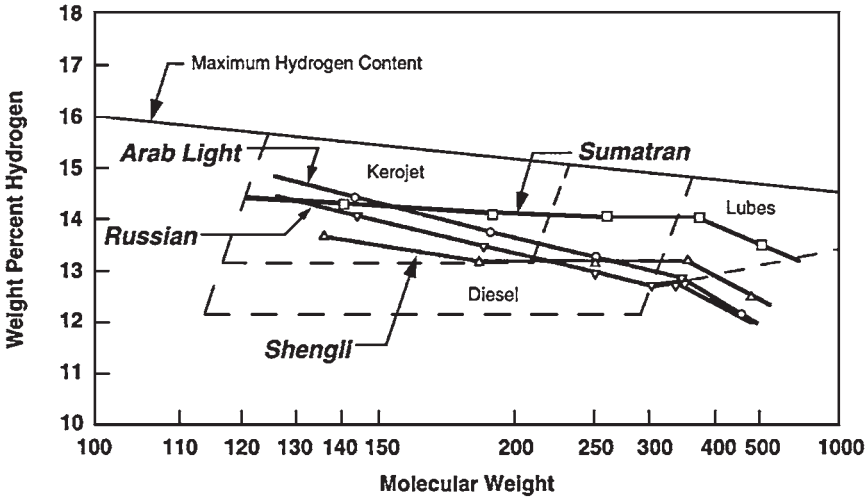

FIGURE 7.1.2 Hydrogen content of distillates from four common crude oils. Some crude oils contain distillates with more hydrogen than others and can be converted to finished products with less effort.

upgrade the vacuum gas oils from these and other crude oils into more valuable, hydrogen-rich products. Using Chevron's Lummus Global's hydrogen-efficient technology, product specifications can often be exceeded. Consequently, greater blending of lower-quality straight-run or cracked stocks into product pools is possible, thereby increasing the refiner's margin while keeping product prices down.

ISOCRACKING CONFIGURATIONS

Several popular configurations are used in the Isocracking process:

- A single-stage, once-through plant (SSOT) (see Fig. 7.1.3) is a low-cost facility for partial conversion to light products. This configuration is used when the heavy unconverted oil has value as a lube oil base stock or as feedstock to an ethylene cracker or FCC unit. Several variants are used to process diesel-range material in the same high-pressure loop as heavy oils, to produce ultralow-sulfur diesel (ULSD). Parallel Isocracking reactors for lube production are often incorporated in grassroots or revamp situations.
- A two-stage Isocracking unit (see Fig. 7.1.4) is used when maximizing transportation fuel yield is the primary goal. In this case the unconverted first-stage product is recycle-hydrocracked in a second stage. This configuration can be designed for maximum yield of middle distillates or naphtha, depending on product values. The ratio of kerosene/jet to diesel or middle distillate to naphtha can be varied over a wide range by either changing product fractionator operation or using alternative second-stage catalysts.[2]
- A suite of processes under the heading "optimized partial conversion" or OPC enable a refiner to maximize the yield of selected product, vary feedstock quality, vary product quality, and finally change conversion based on market demands.[3]

Downloaded from Digital Engineering Library @ McGraw-Hill (www.digitalengineeringlibrary.com)
Copyright © 2004 The McGraw-Hill Companies. All rights reserved.
Any use is subject to the Terms of Use as given at the website.

ISOCRACKING—HYDROCRACKING FOR SUPERIOR FUELS AND LUBES PRODUCTION

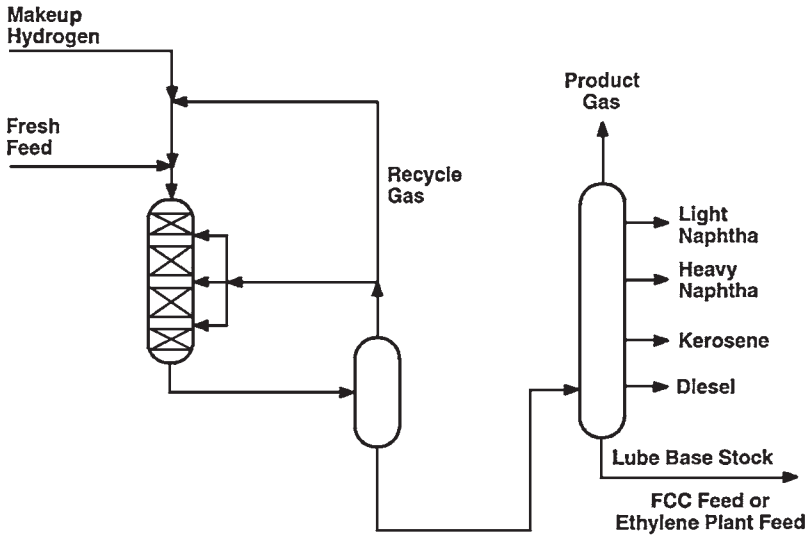

FIGURE 7.1.3 SSOT Isocracking, the simplest, least expensive configuration. Typical configuration for converting heavy oil to lube base stock, FCC feed, or ethylene plant feed.

ISOCRACKING CATALYSTS

Hydrocracking catalysts for upgrading raw (nonhydrotreated) feedstocks contain a mixture of hydrous oxides for cracking and heavy metal sulfides for hydrogenation.

The simplest method for making hydrocracking catalysts is impregnation of the heavy metals into the pores of the hydrous oxide which has already been formed into the final catalyst shape. The support material can contain a number of components—silica, alumina, magnesia, titania, etc. These are all oxides which can exist in a very high surface area form. The ratio of silica to alumina affects the acidity of the final catalyst and, therefore, its cracking activity. High-silica catalysts have high acidity and high cracking activity; high-alumina catalysts have low acidity and low cracking activity.

Zeolites, crystalline aluminosilicates, are sometimes used in hydrocracking catalysts. Zeolites are very active cracking components which greatly increase the cracking function of dual functional catalysts. This can provide significant improvements in catalyst performance at the cost of a lighter product yield structure. Using zeolites in hydrocracking catalysts introduces a yield/activity trade-off into the catalyst design and selection process.

Early experience at Chevron Lummus Global with impregnated catalysts showed that the most active hydrocracking catalysts for raw (nonhydrotreated) feedstocks were those with a highly dispersed hydrogenation component, so Chevron Lummus Global developed catalysts designed to optimize dispersion. Instead of impregnating an already formed support, cogel catalysts are made by precipitating all components from solution at the same time into a homogeneous gel. Careful washing, drying, and calcining give the finished catalysts unique and valuable properties and performance.

Isocracking's cogel catalysts have proved to be highly effective with the heaviest part of vacuum gas oil (VGO) feeds where the nitrogen compounds are concentrated. Table 7.1.3 shows the pilot-plant conditions used to compare the performance of the first cogel

Downloaded from Digital Engineering Library @ McGraw-Hill (www.digitalengineeringlibrary.com)
Copyright © 2004 The McGraw-Hill Companies. All rights reserved.
Any use is subject to the Terms of Use as given at the website.

ISOCRACKING—HYDROCRACKING FOR SUPERIOR FUELS AND LUBES PRODUCTION

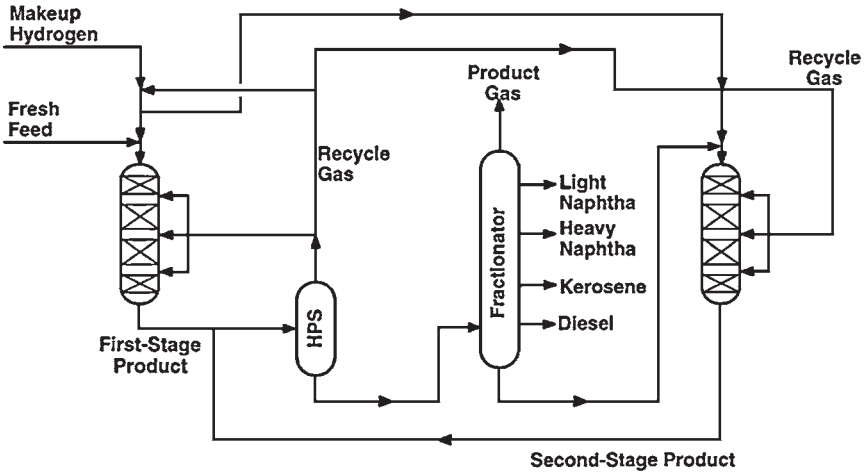

FIGURE 7.1.4 Two-stage Isocracking achieves total conversion. Typical configuration for optimizing yields of transportation fuels, middle distillates, and naphtha.

catalysts to that of impregnated catalysts. The three straight-run vacuum gas oils from California crude feedstocks used in the tests varied in boiling range from a light (23.3°API gravity) VGO to a heavy (15.8°API) VGO. Nitrogen content ranged from 1700 to 5200 ppm. The impregnated catalysts were a high-silica catalyst and a high-alumina catalyst.

Table 7.1.4 shows that the cogel and high-silica catalysts exhibited the best performance. The high-silica catalysts showed the highest activities on the light feeds, but the cogel catalyst was superior on the heaviest feedstock. The higher denitrification of the cogels is the key to their performance on the heavy ends of vacuum gas oils.

This ability to handle heavy feeds was dramatically demonstrated in long runs designed to measure deactivation (fouling) rates. The cogel fouling rate was an order of magnitude lower than those measured on a variety of high-silica catalysts. This comparison is shown in Fig. 7.1.5, in which the performance is correlated with the active pore volume of the different amorphous catalysts. The active pore volume consists of the volume of pores within the rather narrow pore size range that is needed for optimum conversion of vacuum gas oil feedstocks. The superior stability of the cogel catalyst is a result of the more uniform dispersion of the hydrogenation component and the unique distribution of the pore sizes. This combination is very important for effective processing of heavier feedstocks.

Chevron Lummus Global's Richmond laboratory created a complete family of amorphous cogel Isocracking catalysts. This consists of catalysts whose exceptional stability is augmented by special capabilities for selective denitrification, conversion to high yields of middle distillates (jet fuel and diesel), and lube base stocks of outstanding quality.

The addition of small amounts of zeolite components to cogel and other amorphous catalysts enhanced the cracking function of the catalysts. Refiners who need to meet seasonal gasoline (mogas) and jet fuel demands rather than maximize diesel have found that amorphous catalysts with zeolite components will produce lighter product slates more efficiently. Chevron Lummus Global calls these catalysts *amorphous/zeolite* since both components contribute equally to catalyst performance.

Downloaded from Digital Engineering Library @ McGraw-Hill (www.digitalengineeringlibrary.com)
Copyright © 2004 The McGraw-Hill Companies. All rights reserved.
Any use is subject to the Terms of Use as given at the website.

ISOCRACKING—HYDROCRACKING FOR SUPERIOR FUELS AND LUBES PRODUCTION

TABLE 7.1.3 Conditions for Testing Isocracking Catalyst on California Gas Oils

High-nitrogen California feedstocks are used in pilot-plant studies to differentiate between hydrocracking catalysts.

	Boiling range, °F (°C)	Gravity, °API	Nitrogen, ppm	Pressure, lb/in^2 gage	Catalyst temperature, °F (°C)
Light feed	600–710 (316–377)	23.3	1700	1600	710 (377)
Medium feed	600–900 (316–482)	19.8	2900	1800	732 (389)
Heavy feed	700–980 (371–527)	15.8	5200	2000	763 (406)

Note: °API = degrees on American Petroleum Institute scale.

TABLE 7.1.4 Results from Testing Isocracking Catalyst on California Gas Oils

Cogel catalysts are best in converting heavy, high-nitrogen feedstocks.

	Catalyst type		
	Amorphous high-silica impregnated	Amorphous high-alumina impregnated	Amorphous cogel
Light feed	0.27*	0.17	0.21
Medium feed	0.21	0.15	0.20
Heavy feed	0.46	0.33	0.46
Light feed	9.4	5.9	7.3
Medium feed	5.3	4.5	5.6
Heavy feed	4.5	4.9	5.5

*Rate constants are first-order, for conversions below 550°F for light and medium feeds, 650°F for heavy feeds. Units: 1/h.

A third category of Chevron Lummus Global's hydrocracking catalysts, known as *zeolite,* are noncogel, high-zeolite-content catalysts which were introduced by Chevron in the 1980s for naphtha-producing applications. Performance characteristics of these materials are included below in "Product Yields and Qualities."

Chevron Lummus Global has recently introduced a completely new series of zeolitic catalysts (with new zeolites) that mimic or exceed the performance of its own industry-leading cogel catalysts in terms of middle distillate yields. In addition, Chevron Lummus Global has successfully commercialized a noble-metal zeolitic catalyst, ICR-220, with middle-distillate selectivity of ICR-120, a very middle-distillate selective cogel catalyst.

Depending on the catalyst selected, a complete slate of desired products can be produced from a variety of available feedstocks. Feedstocks have ranged from light naphthas to deasphalted oils. FCC cycle stocks are commonly upgraded by hydrocracking. The

Downloaded from Digital Engineering Library @ McGraw-Hill (www.digitalengineeringlibrary.com)
Copyright © 2004 The McGraw-Hill Companies. All rights reserved.
Any use is subject to the Terms of Use as given at the website.

ISOCRACKING—HYDROCRACKING FOR SUPERIOR FUELS AND LUBES PRODUCTION

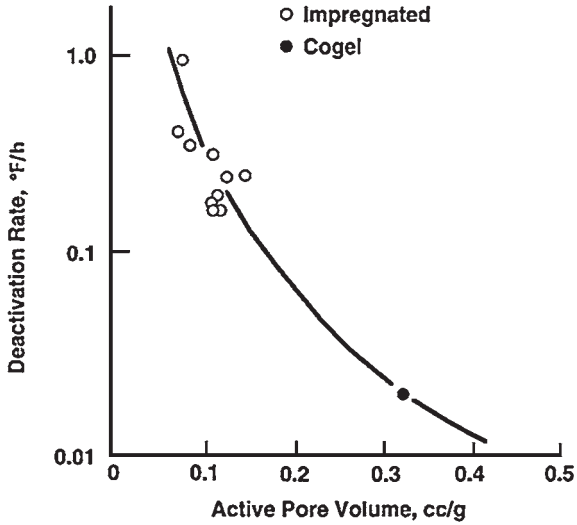

FIGURE 7.1.5 Fouling rate with heavy feeds—cogel versus impregnated catalysts. Cogels show much greater stability and longer run cycles than other amorphous catalysts.

desired products vary from country to country, region to region, and refinery to refinery. In many regions, production of good-quality middle distillates and lube oils gives the best margins, and hydrocracking is the only process that provides the required feed conversion.

Given the various performance characteristics available from the wide range of high-performance catalysts, Isocracking can deliver the following advantages.[4,5]

- Outstanding activity and resistance to fouling, minimizing hydrocracker capital investment and hydrogen consumption
- Higher yields of desired products
- Product specifications always met or exceeded
- Long catalyst cycle lengths combined with successful regenerability
- Consistent product yields and qualities through run cycle
- Flexibility to change product mix
- Flexibility to process more difficult feeds by varying operating conditions between reaction stages

PRODUCT YIELDS AND QUALITIES

Meeting the target product yield is the most important property of a hydrocracking catalyst system. Figure 7.1.6 illustrates the different yield structures that Isocracking can provide by judicious choice of catalyst and design parameters.

Amorphous catalysts such as ICR 106 or ICR 120 or the new generation of zeolitic catalyst systems from Chevron Lummus Global are used for maximum production of middle

Downloaded from Digital Engineering Library @ McGraw-Hill (www.digitalengineeringlibrary.com)
Copyright © 2004 The McGraw-Hill Companies. All rights reserved.
Any use is subject to the Terms of Use as given at the website.

ISOCRACKING—HYDROCRACKING FOR SUPERIOR FUELS AND LUBES PRODUCTION

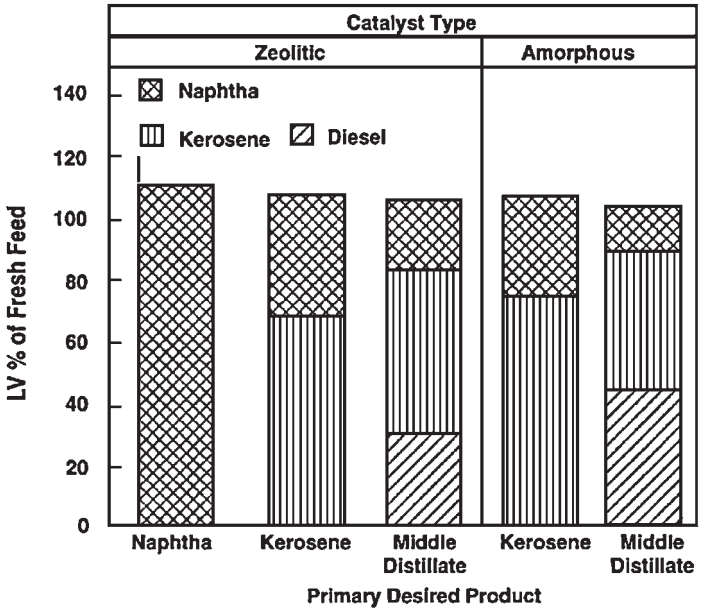

FIGURE 7.1.6 Product yields from alternative catalyst systems. Tailoring Isocracking catalyst systems enables refiners to produce their target product slate from a wide range of crudes.

distillates. Isocrackers using these catalysts can achieve upward of 95 liquid volume percent (LV %) yield of total middle distillate (kerosene plus diesel) while producing less than 15 LV % naphtha.

Amorphous Isocracking catalysts give better cold flow properties than other hydrocracking catalysts, but not at the expense of yields (see Fig. 7.1.7). Isocracking catalysts give a 5 to 10 percent higher yield of quality middle distillate with as much as 22°C lower heavy diesel pour point. Isocracking also gives better-quality end-of-run products. With some catalysts, an increase in product aromatic levels occurs as the run cycle progresses. These aromatics cause the burning quality of middle distillates to deteriorate significantly. Isocracking catalysts provide consistent product quality throughout the length of the run. (See Fig. 7.1.8 for variation of jet quality.)

Polynuclear aromatic (PNA) compounds are undesired by-products formed through a complex sequence of chemical reactions occurring during typical hydrocracking conditions.[6] In processing of heavy straight-run feedstocks using zeolitic catalysts in a recycle configuration, PNAs deposit in the cooler parts of the plant. This disrupts hydrocracker operation. To prevent PNA deposits, most hydrocrackers must operate with a heavy product bleed stream. By using amorphous cogel catalysts, which are much less prone to this phenomenon than zeolitic catalysts, and careful unit design, PNA formation can be controlled and unit downtime can be minimized.

Chevron's amorphous-zeolitic catalyst ICR-142 is suitable in both first-stage and second-stage applications for middle-distillates production. This catalyst is particularly well suited for Isocrackers that produce hydrocrackate for downstream lube production.

Downloaded from Digital Engineering Library @ McGraw-Hill (www.digitalengineeringlibrary.com)
Copyright © 2004 The McGraw-Hill Companies. All rights reserved.
Any use is subject to the Terms of Use as given at the website.

ISOCRACKING—HYDROCRACKING FOR SUPERIOR FUELS AND LUBES PRODUCTION

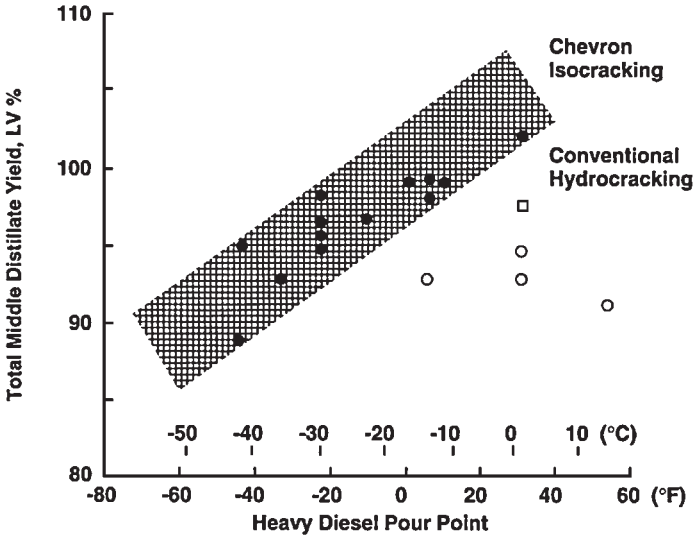

FIGURE 7.1.7 Yield and product quality of middle distillates. Isocracking catalysts increase yields by 5 to 10 percent while maintaining pour points as low as −40°F (−40°C).

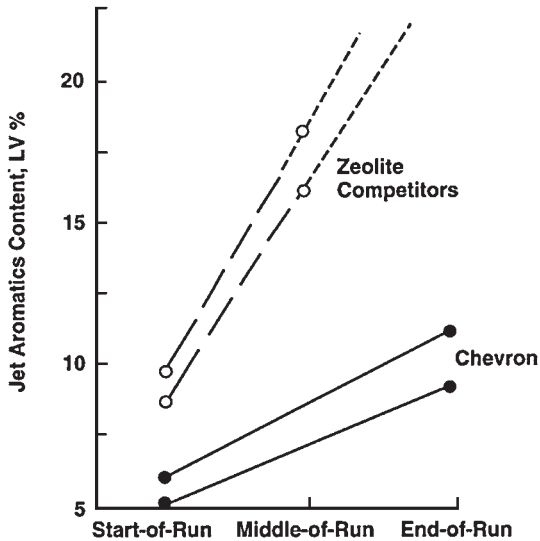

FIGURE 7.1.8 Jet aromatics content over an operating cycle in hydrocracking of Middle Eastern VGO. Chevron catalysts maintain lower jet aromatics and better smoke points throughout a run cycle.

Downloaded from Digital Engineering Library @ McGraw-Hill (www.digitalengineeringlibrary.com)
Copyright © 2004 The McGraw-Hill Companies. All rights reserved.
Any use is subject to the Terms of Use as given at the website.

ISOCRACKING—HYDROCRACKING FOR SUPERIOR FUELS AND LUBES PRODUCTION

Isocracking for Middle-Distillate Production

A two-stage Isocracker using amorphous Isocracking catalysts produces very high yields of kerosene/jet and diesel fuel. The burning qualities of middle distillates produced in the second (recycle) stage are much better than those of the equivalent stocks produced in a once-through unit. Table 7.1.5 shows a typical example for an Arabian VGO feedstock. The aromatic contents of both the jet and diesel products are less than 1 percent. This difference is shown dramatically in Fig. 7.1.9, which compares the product hydrogen contents for the yield structures shown on Tables 7.1.5 and 7.1.6 with the corresponding Arabian and Chinese (Fig. 7.1.9) single-stage operations. For comparison, the very low hydrogen content of FCC products is also shown. In recycle operation, Isocracking produces middle distillates which exceed target specifications for smoke point, cetane, and sulfur. This enables a refiner to blend more lower-value diesel stock into the product pool, thereby upgrading it from fuel oil to diesel value. Figure 7.1.10 shows that diesel blends containing up to 40 percent FCC light cycle oil are possible, depending on the diesel cetane and sulfur specifications. Lately, most refiners are processing coker gas oils and light cycle oils through high-pressure hydrotreating unit; Isocracking offers the best possibility of upgrading these cracked stocks along with heavy gas oil conversion in a single high-pressure loop.

TABLE 7.1.5 Product Yields and Qualities for Arabian VGO

Recycle Isocracking maximizes middle-distillate yields and qualities, producing 5 percent more heavy diesel than conventional catalysts.

Feed	
Source	Arabian VGO
Gravity, °API	33.8
Sulfur, ppm	8.0
Nitrogen, ppm	0.8
D 2887 distillation, °C:	
ST/5	363/378
10/30	386/416
50	444
70/90	479/527
95/EP	546/580

	Product yields		Product quality	
Product	wt %	LV %	Characteristic	Value
C_5–82°C	6.8	8.9		
82–121°C	8.8	10.4	P/N/A	58/42/0
121–288°C	49.1	53.8	P/N/A	57/42/1
			Smoke point, mm	41
			Freeze point, °C	≤75
288–372°C	32.5	34.2	Cetane index	>68
			P/N/A	62/37/1
			Cloud point, °C	−18
			Pour point, °C	−39

Note: P/N/A = paraffins/naphthalenes/aromatics; EP = endpoint.

Downloaded from Digital Engineering Library @ McGraw-Hill (www.digitalengineeringlibrary.com)
Copyright © 2004 The McGraw-Hill Companies. All rights reserved.
Any use is subject to the Terms of Use as given at the website.

ISOCRACKING—HYDROCRACKING FOR SUPERIOR FUELS AND LUBES PRODUCTION

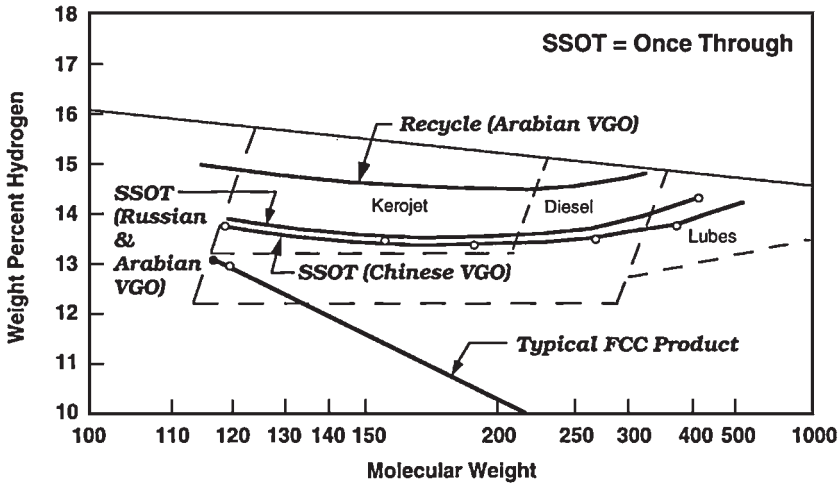

FIGURE 7.1.9 Hydrogen contents for single-stage versus recycle Isocracking products. Both Isocracker configurations add hydrogen where it is needed, but with recycle operations the exceptional product quality enables the refiner to upgrade fuel oil to diesel value.

Isocracking for Naphtha Production

Zeolitic catalysts are generally used in this service since they are more active than amorphous catalysts and produce a higher ratio of naphtha to middle distillate. Chevron Lummus Global's noble metal/zeolite and base metal/zeolite catalysts have different performance characteristics. The noble metal/zeolite catalyst provides higher liquid and jet fuel yields, higher smoke point jet fuel, and longer cycle length. The base metal/zeolite catalyst provides a lower liquid yield but a higher yield of C_4- gas and isobutane, a higher-octane light naphtha, and a more aromatic product naphtha. The selection of a noble metal or a base metal catalyst for a hydrocracker depends on the economics of the particular refinery situation.

Chevron Lummus Global has developed and commercialized a number of improved zeolitic Isocracking catalysts (ICR 209, 210, and 211)[10] capable of giving high naphtha yields (see Fig. 7.1.6) and long run lengths in many commercial plants. Figure 7.1.11 shows the very low deactivation rate that is typical of operation with ICR 208 in the Chevron U.S.A. Richmond two-stage Isocracker.

Refiners may take advantage of the high activity and long cycle length of Chevron's zeolitic catalysts by

- Increasing plant throughput
- Processing more difficult, lower-value feeds
- Decreasing first-stage severity to balance catalyst life in both stages
- Decreasing the hydrogen partial pressure to reduce hydrogen consumption

Isocracking for Lube Production

The lube oil industry faces constant change resulting from environmental legislation, new engine designs, consumer demands, competitive pressures, and availability of lube-quali-

Downloaded from Digital Engineering Library @ McGraw-Hill (www.digitalengineeringlibrary.com)
Copyright © 2004 The McGraw-Hill Companies. All rights reserved.
Any use is subject to the Terms of Use as given at the website.

ISOCRACKING—HYDROCRACKING FOR SUPERIOR FUELS AND LUBES PRODUCTION

TABLE 7.1.6 Isocracking—Typical Yields and Product Qualities

Isocracking produces high yields of 100 VI lube base stocks.

Feed	
Source	Russian
Gravity, °API	18.5
Sulfur, wt %	2.28
Nitrogen, wt %	0.28
Wax, wt %	6.5
D 2987 distillation, °C:	
ST	435
10/30	460/485
50	505
70/90	525/550
EP	600

	Product yields		Product quality	
Product	wt %	LV %	Characteristic	Value
C_5–180°C	4.8	5.9		
180–290°C	15.4	17.4	Smoke point, mm	22
			Cetane index	56
290–370°C	16.4	18.1	Flash point, °C	145
370–425°C	13.7	15.0		
425–475°C	19.3	21.0	Solvent dewaxed 240N	
			VI	97
			Pour point, °C	−12
475°C+	27.4	29.6	Solvent dewaxed 500N	
			VI	105
			Pour point, °C	−12

ty crudes. Lube oil manufacturers must manage these changes to stay competitive. Improved fuel economy and environmental requirements are driving the demand for higher-quality, lower-viscosity multigrade oils. Using conventional mineral oil technology, it is very difficult to meet stringent requirements on volatility. Base oils with very high paraffin content have low volatility for their viscosity and much higher viscosity indexes than more aromatic oils.

A single-stage once-through Isocracker removes heavy aromatics very effectively, thereby producing highly paraffinic lube base stocks. Isocracking has several advantages over the more traditional solvent extraction approach to lube base oil production:

- Solvent extraction upgrades the VI of feed by physical separation; i.e., low-VI components are removed as extract, and high-VI components remain in the raffinate. Isocracking upgrades VI by removing low-VI components through aromatics saturation and naphthenic ring opening. By creating higher-VI components, Isocracking allows the use of unconventional crudes for lube production.
- Feedstock (unconventional crudes) and operating costs are lower with Isocracking than with solvent extraction.
- The by-products of Isocracking include valuable high-quality transportation fuels, whereas solvent refining produces a highly aromatic extract which is used in fuel oil or as FCC feed. Typical Isocracking product yields and qualities from a Russian feed-

Downloaded from Digital Engineering Library @ McGraw-Hill (www.digitalengineeringlibrary.com)
Copyright © 2004 The McGraw-Hill Companies. All rights reserved.
Any use is subject to the Terms of Use as given at the website.

ISOCRACKING—HYDROCRACKING FOR SUPERIOR FUELS AND LUBES PRODUCTION

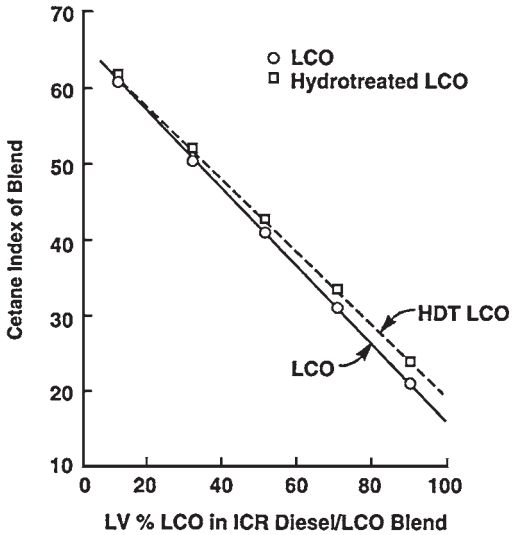

FIGURE 7.1.10 Isocracker diesel upgrades light cycle oils. Using recycle Isocracking, refiners can reduce product costs by adding up to 40 percent FCC light cycle oil to their diesel blends while still meeting 45 cetane index.

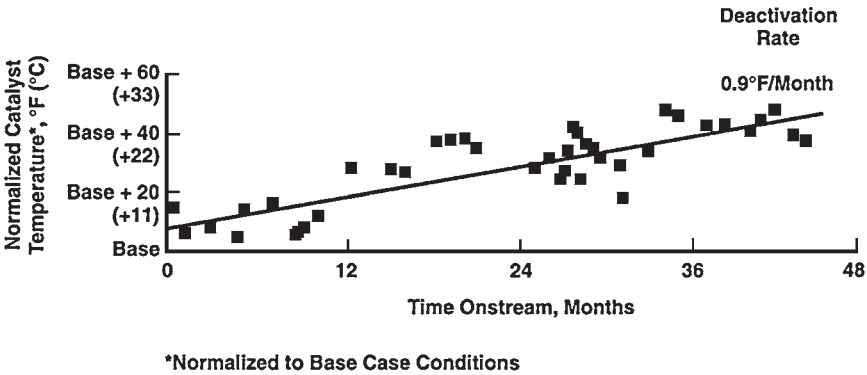

FIGURE 7.1.11 Deactivation rate of zeolitic catalysts. Zeolitic catalyst ICR 208 has demonstrated long life in Chevron's Richmond refinery, maintaining product quality throughout the run.

stock are shown in Table 7.1.6. For comparison, typical extract qualities are shown in Table 7.1.7.

- Lube Isocrackers are easily adapted to meet other processing objectives. For example, during times of low lube demand, Isocrackers can produce transportation fuels and prepare premium FCC feed. (A corollary of this is that Isocrackers designed for transportation fuels can also be adapted for lube operation.)

Downloaded from Digital Engineering Library @ McGraw-Hill (www.digitalengineeringlibrary.com)
Copyright © 2004 The McGraw-Hill Companies. All rights reserved.
Any use is subject to the Terms of Use as given at the website.

ISOCRACKING—HYDROCRACKING FOR SUPERIOR FUELS AND LUBES PRODUCTION

TABLE 7.1.7 Solvent Extraction—Typical Yields and Product Qualities

Furfural extracts contain high levels of heavy aromatics and can be used only in fuel oil or as FCC feed.

Characteristic	Typical inspections
Gravity, °API	13.3
Specific gravity	0.977
Sulfur, wt %	4.3
Nitrogen, ppm	1900
Aromatics, wt %	82
Conradson carbon, wt %	1.4
Aniline point, °F	108
TBP distillation, °F:	
ST	700
10%	788
50%	858
90%	932
EP	986
Carbon, wt %	84.82
Hydrogen, wt %	10.68
Viscosity index	−50

Note: TBP = true boiling point.

Depending on the refiner's processing objective, Chevron Lummus Global's amorphous and amorphous/zeolite cogel catalysts are used in Isocrackers operating in base oil production mode.

Isodewaxing

The waxy lube oil produced from hydrocracking must be dewaxed in order to produce lube base stocks that meet quality requirements for finished lubricants. Chevron Lummus Global's Isodewaxing process outperforms traditional solvent or catalytic dewaxing processes in producing high-quality base oils. Traditional dewaxing processes remove wax from lube oils by crystallization (solvent dewaxing) or by cracking the normal paraffin wax molecules to light gas (catalytic dewaxing). In contrast, Chevron Lummus Global's Isodewaxing catalyst isomerizes the normal paraffin wax to desirable isoparaffin lube molecules, resulting in high-VI, low-pour-point base oils, while coproducing small quantities of high-quality middle-distillate transportation fuels.

Operating conditions for Isodewaxing are very similar to those for conventional lube oil hydrotreating; thus it is generally possible to combine the Isodewaxer/hydrofinisher operations in the same process unit or use an existing hydrotreater for a revamp project.

Generally speaking, the higher the VI, the better the cold flow and thermal stability properties of the lubricant. Isodewaxing economically produces conventional base oils (CBOs) with VIs of 95 to 110 or unconventional base oils (UCBOs) with VIs over 110 from either hydrocracked feedstocks or hydrotreated feedstocks from a solvent extraction process. In fact, with Isocracking, the higher the wax content in the feedstock, the higher the product VI. UCBOs up to about 130 VI are today typically prepared by severe hydro-

Downloaded from Digital Engineering Library @ McGraw-Hill (www.digitalengineeringlibrary.com)
Copyright © 2004 The McGraw-Hill Companies. All rights reserved.
Any use is subject to the Terms of Use as given at the website.

ISOCRACKING—HYDROCRACKING FOR SUPERIOR FUELS AND LUBES PRODUCTION

cracking of vacuum gas oils derived from lube crudes followed by solvent extraction and solvent dewaxing. Isodewaxing can also produce this type of UCBO lubes from hydrocrackate, or from waxy vacuum gas oil, but at a lower cost because solvent dewaxing is not required. Table 7.1.8 shows the capabilities for UCBO manufacture by Isodewaxing on a Sumatran light vacuum gas oil. Isodewaxing produces $2^1/_2$ times the UCBO yield of conventional dewaxing.

Chevron Lummus Global's Isodewaxing catalyst ICR 404 produces mineral-oil-based lubricants that approach the performance of synthetic lubricants, but at a much lower manufacturing cost. Isodewaxed base oils have

- Better cold flow properties to ensure adequate lubrication during cold engine start-ups
- Low viscosity (for fuel efficiency) combined with low volatility (to reduce oil consumption and emissions)
- Higher VI for improved lubrication in high-temperature, high-shear conditions
- Greater oxidation stability for longer lubricant life and fewer engine deposits

Chevron Lummus Global has commercialized improved Isodewaxing catalysts such as the ICR-408 series which give higher yields and viscosities while being more tolerant of sulfur. Isodewaxing is the most cost-effective method to produce a mineral-oil-based lubricant which will meet strict engine performance requirements.

Isocracking for Petrochemical Feedstock Production

Both aromatics and olefin users within the petrochemical industry benefit from hydrocracking processes. The aromatics industry takes advantage of the conservation of single-ring compounds in hydrocracked naphthas. These compounds are precursors for the benzene, toluene, and xylenes produced when the naphtha is catalytically reformed. The Isocracking catalysts and configurations used in this application are the same as those used for gasoline production. The olefin industry requires hydrogen-rich feedstocks, since increasing the hydrogen content invariably improves the yield of olefins and decreases the production of heavy, undesirable products. Figure 7.1.12 shows the correlation[11] between the ethylene yield and the Bureau of Mines correlation index. This index is closely related to feedstock hydrogen content. Sinopec is operating a Chevron Lummus Global SSOT

TABLE 7.1.8 Unconventional Base Oil from Sumatran Light VGO

Isodewaxing produces 2 to 6 times the UCBO that is achieved by solvent dewaxing.

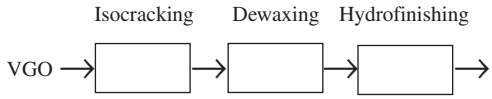

Product	Chevron Isodewaxing	Solvent dewaxing
Viscosity at 100°C, cSt	4.5	3.8
VI	130	133
Pour point, °C	−12	−12
Yield, LV % VGO feed	65	25

Downloaded from Digital Engineering Library @ McGraw-Hill (www.digitalengineeringlibrary.com)
Copyright © 2004 The McGraw-Hill Companies. All rights reserved.
Any use is subject to the Terms of Use as given at the website.

ISOCRACKING—HYDROCRACKING FOR SUPERIOR FUELS AND LUBES PRODUCTION

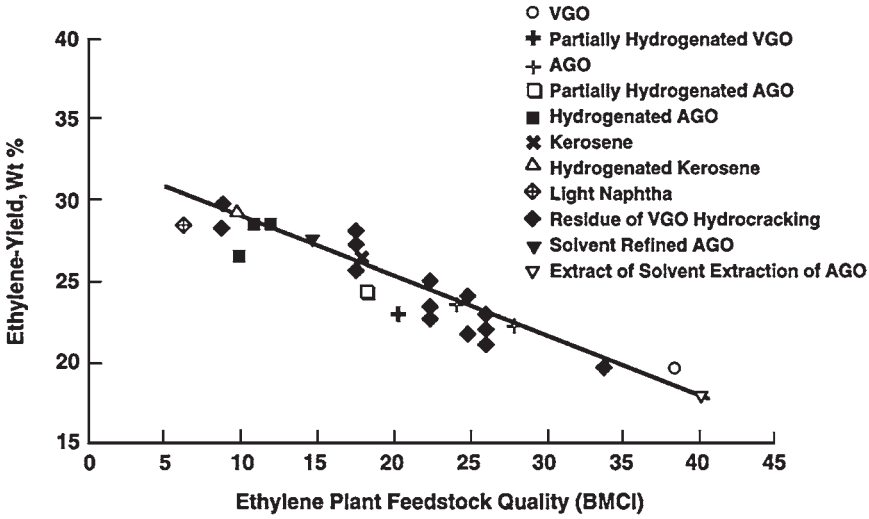

FIGURE 7.1.12 Correlation between ethylene yield and Bureau of Mines correlation index. Ethylene can be produced from many different feedstocks.

Isocracker at the Qilu refinery. The heavy product from that unit is fed to an ethylene cracker. Typical product yields and qualities are shown in Table 7.1.9. Note the excellent quality middle distillates produced in the same operation.

INVESTMENT AND OPERATING EXPENSES

The capital investment required for an Isocracking unit depends on the type of feedstock to be processed and the quality of the products which are desired. For middle-distillate and lube oil base stock production, the greater the difference in hydrogen content between the feedstock and the desired products, the greater the capital requirement. Feedstock impurities, such as metals, asphaltenes, nitrogen, and sulfur, increase refining difficulty. Care must be taken in the feedstock preparation facilities to minimize their effect.

Table 7.1.10 gives a rough idea of typical on-plot investment ranges for installing Isocracking units on the U.S. Gulf Coast. Table 7.1.11 shows typical utility requirements for the same plants.

SUMMARY

Chevron Lummus Global's Isocracking configurations and catalyst systems have produced outstanding quality products, from a variety of feedstocks, all around the world. The Isodewaxing technology has heralded in a new era of cost-effective, superior-quality lube oil production.

Chevron is the only major operator of high-pressure hydroprocessing units that also develops refining technology. Chevron's Richmond refinery contains the largest hydrocracking complex in the world (see Fig. 7.1.13). Within the same plot space, there are 15

Downloaded from Digital Engineering Library @ McGraw-Hill (www.digitalengineeringlibrary.com)
Copyright © 2004 The McGraw-Hill Companies. All rights reserved.
Any use is subject to the Terms of Use as given at the website.

ISOCRACKING—HYDROCRACKING FOR SUPERIOR FUELS AND LUBES PRODUCTION

TABLE 7.1.9 Ethylene Plant Feed Production via Isocracking

SSOT Isocracking upgrades VGO into a high yield of good-quality ethylene plant feed.

Feed	
Source:	Chinese (Shengli)
Gravity, °API	21.4
Sulfur, wt %	1.03
Nitrogen, wt %	0.21
D 2887 distillation, °C:	
ST/5	314/353
10/30	371/414
50	441
70/90	463/500
95/EP	518/551

Product yields			Product quality	
Product	wt %	LV %	Characteristic	Value
C_5–129°C	13.31	17.05		
129–280°C	34.63	39.41	Smoke point, mm	26
			Freeze point, °C	−62
280–350°C	12.40	13.64	Cetane index	57
			Pour point, °C	−12
350°C+	37.04	40.45	Sulfur, ppm	7
			BMCI	15

Note: BMCI is Bureau of Mines correlation index.

high-pressure reactors representing a 45,000 barrels per operating day (BPOD) two-stage Isocracker, two SSOT Isocrackers (with a total feed rate of 30,000 BPOD) producing lube stocks which are then Isodewaxed, and a 65,000-BPOD deasphalted oil hydrotreater. This experience guides Chevron's development of new hydrocracking catalysts and processes. The Isocracking process is offered for license by

Chevron Lummus Global, Inc., 100 Chevron Way, Richmond, CA 94802 and
1515 Broad Street, Bloomfield, NJ 07003

REFERENCES

1. A. G. Bridge, G. D. Gould, and J. F. Berkman, "Chevron Hydroprocesses for Upgrading Petroleum Residue," *Oil and Gas Journal,* **85,** Jan. 19, 1981.

2. A. G. Bridge, J. Jaffe, B. E. Powell, and R. F. Sullivan, "Isocracking Heavy Feeds for Maximum Middle Distillate Production," 1983 API Meeting, Los Angeles, May 1993.

3. D. R. Cash, A. S. Krishna, D. Farshid, G. J. Forder, Laszlo Toth, and Edmund Monkiewicz, "Hydrocracking Solutions for Reducing Sulfur," *Petroleum Technology Quarterly,* Summer 2001.

4. A. G. Bridge, D. R. Cash, and J. F. Mayer, "Cogels—A Unique Family of Isocracking Catalysts," 1993 NPRA Meeting, San Antonio, Tex., Mar. 21–23, 1993.

Downloaded from Digital Engineering Library @ McGraw-Hill (www.digitalengineeringlibrary.com)
Copyright © 2004 The McGraw-Hill Companies. All rights reserved.
Any use is subject to the Terms of Use as given at the website.

ISOCRACKING—HYDROCRACKING FOR SUPERIOR FUELS AND LUBES PRODUCTION

TABLE 7.1.10 Typical Isocracker Capital Investments*

Operation	Cost per BPOD of feed, $ U.S.
Single-stage, once-through	
For lubes or fuels	1500–2500
Two-stage	
Middle distillate	2000–3000
Naphtha	2500–3500

*U.S. Gulf Coast, mid-1995, on plot only.
Note: BPOD = barrels per operating day.

TABLE 7.1.11 Typical Isocracker Utility Requirements

	Configuration	
	Single-stage	Two-stage
Fuel, million kcal/h	0.5 to 0.7	0.8 to 1.2
Power, kW	250 to 300	300 to 425
Cooling water, m^3/h	50 to 70	50 to 70
Medium-pressure steam, 10^3 kg/h	0 to 0.2	−0.4 to 0.2
Condensate, m^3/h	−0.4 to −0.7	−0.7 to −0.9

*Basis: consumption per 1000-BPOD capacity.
Note: Each Isocracking plant has its own unique utility requirements depending on the refinery situation and the need to integrate with existing facilities. The above guidelines can be used to give typical operating expenses.

5. R. L. Howell, R. F. Sullivan, C. Hung, and D. S. Laity, "Chevron Hydrocracking Catalysts Provide Refinery Flexibility," Japan Petroleum Institute, Petroleum Refining Conference, Tokyo, Oct. 19–21, 1988.

6. R. F. Sullivan, M. Boduszynski, and J. C. Fetzer, "Molecular Transformations in Hydrotreating and Hydrocracking," *Journal of Energy and Fuels,* **3,** 603 (1989).

7. D. V. Law, "New Catalyst and Process Developments in Residuum Upgrading," The Institute of Petroleum, Economics of Refining Conference, London, Oct. 19, 1993.

8. M. W. Wilson, K. L. Eiden, T. A. Mueller, S. D. Case, and G. W. Kraft, "Commercialization of Isodewaxing—A New Technology for Dewaxing to Manufacture High-Quality Lube Base Stocks," 1994 NPRA Meeting, Houston, Tex., Nov. 3–4, 1994.

9. S. J. Miller, "New Molecular Sieve Process for Lube Dewaxing by Wax Isomerization," *Microporous Materials,* **2,** 439–449 (1994).

10. A. J. Dahlberg, M. M. Habib, R. O. Moore, D. V. Law, and L. J. Convery, "Improved Zeolitic Isocracking Catalysts," 1995 NPRA Meeting, San Francisco, Mar. 19–21, 1995.

11. S. Nowak, G. Zummerman, H. Guschel, and K. Anders, "New Routes to Low Olefins from Heavy Crude Oil Fractions," *Catalysts in Petroleum Refining,* pp. 103–127, Elsevier Science Publishers, New York, 1989.

Downloaded from Digital Engineering Library @ McGraw-Hill (www.digitalengineeringlibrary.com)
Copyright © 2004 The McGraw-Hill Companies. All rights reserved.
Any use is subject to the Terms of Use as given at the website.

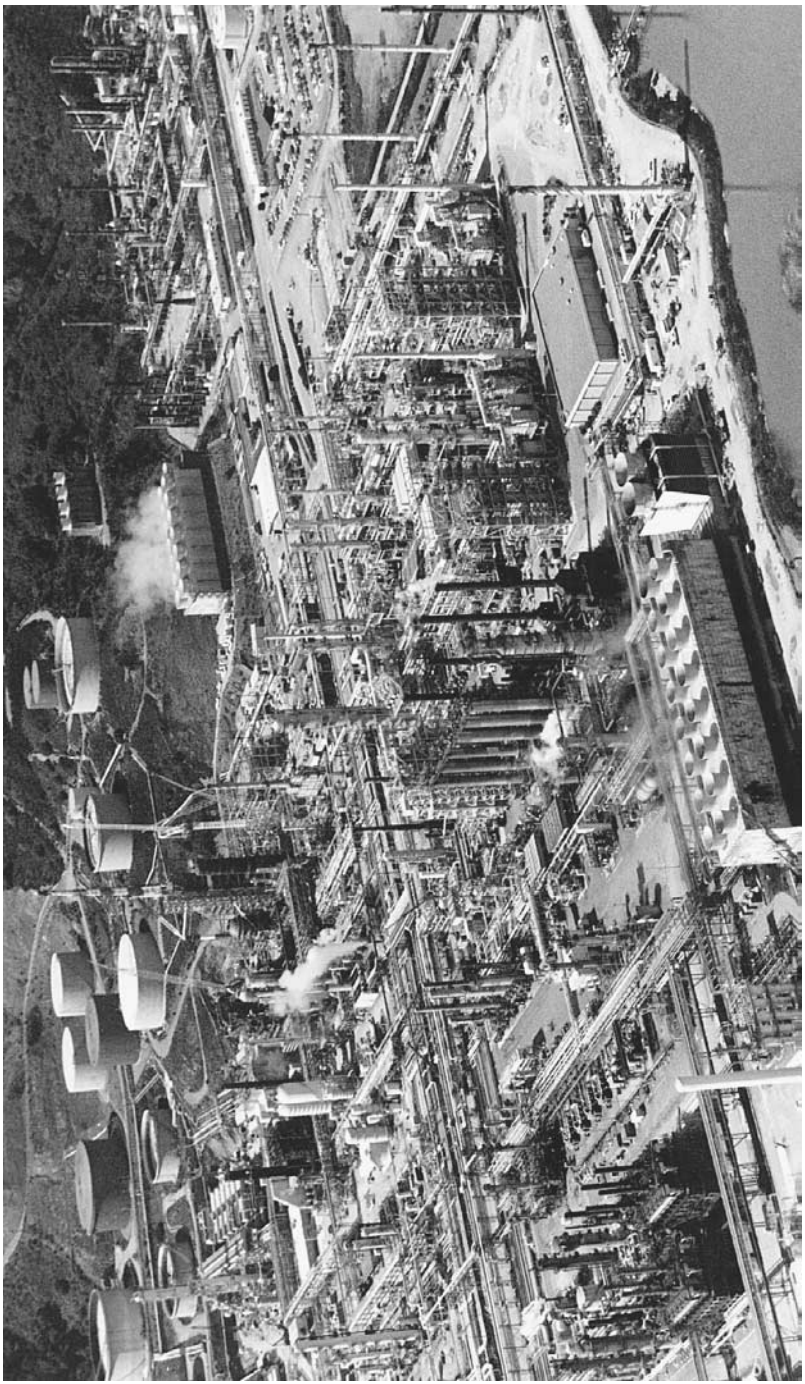

FIGURE 7.1.13 Chevron U.S.A.'s Richmond refinery contains the largest hydrocracking complex in the world.

Downloaded from Digital Engineering Library @ McGraw-Hill (www.digitalengineeringlibrary.com)
Copyright © 2004 The McGraw-Hill Companies. All rights reserved.
Any use is subject to the Terms of Use as given at the website.

Source: HANDBOOK OF PETROLEUM REFINING PROCESSES

CHAPTER 7.2
UOP UNICRACKING PROCESS FOR HYDROCRACKING

Donald Ackelson
UOP LLC
Des Plaines, Illinois

INTRODUCTION

Hydrotreating and hydrocracking are among the oldest catalytic processes used in petroleum refining. They were originally employed in Germany in 1927 for converting lignite to gasoline and later used to convert petroleum residues to distillable fractions. The first commercial hydrorefining installation in the United States was at Standard Oil Company of Louisiana in Baton Rouge in the 1930s. Following World War II, growth in the use of hydrocracking was slow. The availability of Middle Eastern crude oils reduced the incentive to convert coal to liquid fuels, and new catalytic cracking processes proved more economical for converting heavy crude fractions to gasoline. In the 1950s, hydrodesulfurization and mild hydrogenation processes experienced a tremendous growth, mostly because large quantities of by-product hydrogen were made available from the catalytic reforming of low-octane naphthas to produce high-octane gasoline.

The first modern hydrocracking operation was placed on-stream in 1959 by Standard Oil Company of California. The unit was small, producing only 1000 barrels per stream-day (BPSD). As hydrocracking units were installed to complement existing fluid catalytic cracking (FCC) units, refiners quickly recognized that the hydrocracking process had the flexibility to produce varying ratios of gasoline and middle distillate. Thus, the stage was set for rapid growth in U.S. hydrocracking capacity from about 3000 BPSD in 1961 to about 120,000 BPSD in just 5 years. Between 1966 and 1983, U.S. capacity grew eightfold, to about 980,000 BPSD.

Outside the United States, early applications involved production of liquefied petroleum gas (LPG) by hydrocracking naphtha feedstocks. The excellent quality of distillate fuels produced when hydrocracking gas oils and other heavy feedstocks led to the choice of the hydrocracking process as a major conversion step in locations where diesel and jet fuels were in demand. Interest in high-quality distillate fuels produced by hydrocracking has increased dramatically worldwide. As of 2002, more than 4 million BPSD of hydrocracking capacity is either operating or is in design and construction worldwide.

Downloaded from Digital Engineering Library @ McGraw-Hill (www.digitalengineeringlibrary.com)
Copyright © 2004 The McGraw-Hill Companies. All rights reserved.
Any use is subject to the Terms of Use as given at the website.

UOP UNICRACKING PROCESS FOR HYDROCRACKING

PROCESS APPLICATIONS

Hydrocracking is one of the most versatile of all petroleum refining processes. Any fraction from naphtha to nondistillables can be processed to produce almost any desired product with a molecular weight lower than that of the chargestock. At the same time that hydrocracking takes place, sulfur, nitrogen, and oxygen are almost completely removed, and olefins are saturated so that products are a mixture of essentially pure paraffins, naphthenes, and aromatics. Table 7.2.1 illustrates the wide range of applications of hydrocracking by listing typical chargestocks and the usual desired products.

The first eight chargestocks are virgin fractions of petroleum crude and gas condensates. The last four are fractions produced from catalytic cracking and thermal cracking. All these streams are being hydrocracked commercially to produce one or more of the products listed.

This flexibility gives the hydrocracking process a particularly important role as refineries attempt to meet the challenges of today's economic climate. The combined influences of low-quality feed sources, capital spending limitations, hydrogen limitations, environmental regulatory pressures, and intense competition have created a complex optimization problem for refiners. The hydrocracking process is uniquely suited, with proper optimization, to assist in solving these problems. UOP, with its broad background and research capabilities, has continued to develop both catalyst and process capabilities to meet the challenges.

PROCESS DESCRIPTION

The UOP* Unicracking* process is carried out at moderate temperatures and pressures over a fixed catalyst bed in which the fresh feed is cracked in a hydrogen atmosphere. Exact process conditions vary widely, depending on the feedstock properties and the products desired. However, pressures usually range between 35 and 219 kg/cm^2 (500 and 3000 lb/in^2 gage) and temperatures between 280 and 475°C (536 and 887°F).

*Trademark and/or service mark of UOP.

TABLE 7.2.1 Applications of the Unicracking Process

Chargestock	Products
Naphtha	Propane and butane (LPG)
Kerosene	Naphtha
Straight-run diesel	Naphtha and/or jet fuel
Atmospheric gas oil	Naphtha, jet fuel, and/or distillates
Natural gas condensates	Naphtha
Vacuum gas oil	Naphtha, jet fuel, distillates, lubricating oils
Deasphalted oils and demetallized oils	Naphtha, jet fuel, distillates, lubricating oils
Atmospheric crude column bottoms	Naphtha, distillates, vacuum gas oil, and low-sulfur residual fuel
Catalytically cracked light cycle oil	Naphtha
Catalytically cracked heavy cycle oil	Naphtha and/or distillates
Coker distillate	Naphtha
Coker heavy gas oil	Naphtha and/or distillates

Downloaded from Digital Engineering Library @ McGraw-Hill (www.digitalengineeringlibrary.com)
Copyright © 2004 The McGraw-Hill Companies. All rights reserved.
Any use is subject to the Terms of Use as given at the website.

UOP UNICRACKING PROCESS FOR HYDROCRACKING

Chemistry

Hydrocracking chemistry is bifunctional catalytic chemistry involving acid-catalyzed isomerization and cracking reactions as well as metal-catalyzed hydrogenation reactions. The resulting products are lower in aromatics and contain naphthenes and highly branched paraffins due to the higher stability of the tertiary carbenium ion intermediate. For paraffins, the reaction network, shown in Fig. 7.2.1, is postulated to begin with a dehydrogenation step at a metal site forming an olefin intermediate, which is quickly protonated at an acid site to yield a carbenium ion. This is quickly followed by a series of isomerization reactions to the most stable tertiary carbenium ions and subsequent cracking to smaller paraffin, which evolves off the catalyst surface and smaller carbenium ion intermediate. The carbenium ion can then eliminate a proton to form an olefinic intermediate, which gets hydrogenated at a metal site or directly abstract a hydride ion from a feed component to form a paraffin and desorb from the surface.

A typical hydrocracking reaction for a cycloparaffin (Fig. 7.2.2) is known as a paring reaction, in which methyl groups are rearranged and then selectively removed from the cycloparaffin without severely affecting the ring itself. Normally the main acyclic product is isobutane. The hydrocracking of multiple-ring naphthene, such as decalin, is more rapid than that of a corresponding paraffin. Naphthenes found in the product contain a ratio of methylcyclopentane to methylcyclohexane that is far in excess of thermodynamic equilibrium.

Reactions during the hydrocracking of alkyl aromatics (Fig. 7.2.3) include isomerization, dealkylation, paring, and cyclization. In the case of alkylbenzenes, ring cleavage is almost absent, and methane formation is at a minimum.

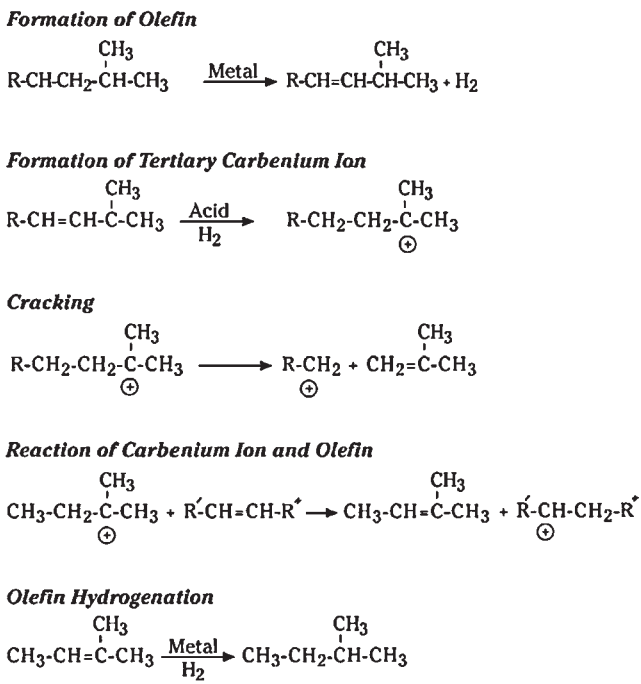

FIGURE 7.2.1 Postulated paraffin-cracking mechanism.

Downloaded from Digital Engineering Library @ McGraw-Hill (www.digitalengineeringlibrary.com)
Copyright © 2004 The McGraw-Hill Companies. All rights reserved.
Any use is subject to the Terms of Use as given at the website.

UOP UNICRACKING PROCESS FOR HYDROCRACKING

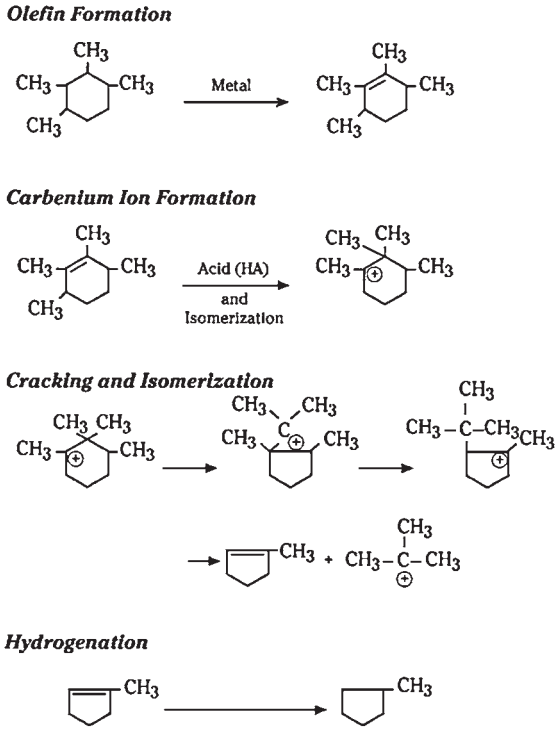

FIGURE 7.2.2 Postulated cracking mechanism for naphthenes.

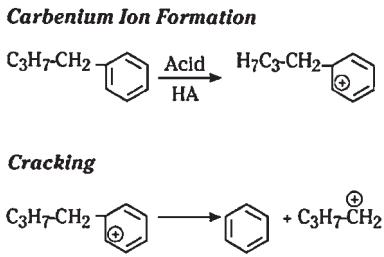

FIGURE 7.2.3 Postulated aromatic-dealkylation mechanism. Isobutane is also formed following butyl carbenium ion isomerization, olefin formation, and hydrogenation.

Catalyst

Hydrocracking catalysts combine acid and hydrogenation components in a variety of types and proportions to achieve the desired activity, yield structure, and product properties. Noble metals as well as combinations of certain base metals are employed to provide the hydrogenation function. Platinum and palladium are commonly used noble metals while the sulfided forms of molybdenum and tungsten promoted nickel or cobalt are the most

Downloaded from Digital Engineering Library @ McGraw-Hill (www.digitalengineeringlibrary.com)
Copyright © 2004 The McGraw-Hill Companies. All rights reserved.
Any use is subject to the Terms of Use as given at the website.

UOP UNICRACKING PROCESS FOR HYDROCRACKING

common base-metal hydrogenation agents. The cracking function is provided by one or a combination of zeolites and amorphous silica-aluminas selected to suit the desired operating and product objectives.

A postulated network of reactions that occur in a typical hydrocracker processing a heavy petroleum fraction is shown in Fig. 7.2.4. The reactions of the multiring species should be noted. These species, generally coke precursors in nonhydrogenative cracking, can be effectively converted to useful fuel products in a hydrocracker because the aromatic rings can be first hydrogenated and then cracked.

Amorphous silica-alumina was the first catalyst support material to be used extensively in hydrocracking service. When combined with base-metal hydrogenation promoters, these catalysts effectively converted vacuum gas oil (VGO) feedstocks to products with lower molecular weight. Over three decades of development, amorphous catalyst systems have been refined to improve their performance by adjustment of the type and level of the acidic support as well as the metal function. Catalysts such as UOP's DHC-2 and DHC-8 have a well-established performance history in this service, offering a range of activity and selectivity to match a wide range of refiners' needs.

Crystalline catalyst support materials, such as zeolites, have been used in hydrocracking catalysts by UOP since the mid-1960s. The combination of selective pore geometry and varying acidity has allowed the development of catalysts that convert a wide range of feedstocks to virtually any desired product slate. UOP now offers catalysts that will selectively produce LPG, naphtha, middle distillates, or lube base oils at high conversion activity using molecular-sieve catalyst support materials. The UOP zeolite materials used in hydrocracking service are often grouped according to their selectivity patterns. Base metal catalysts utilized for naphtha applications are HC-24, HC-34, and HC-170. Flexible base metal catalysts (naphtha, jet, diesel) include DHC-41, HC-43, HC-33, HC-26, and HC-29. The distillate catalysts, which offer a significantly enhanced activity over amorphous catalysts while maintaining the excellent middle-distillate selectivity, are HC-110, HC-115, DHC-32, and DHC-39. Noble metal catalysts are also available for both naphtha (HC-28) and jet/naphtha (HC-35) service. Unlike the amorphous-based catalysts, the zeolite-containing materials are usually more selective to lighter products and thus more suitable when flexibility in product choice is desired. In addition, zeolitic catalysts typically

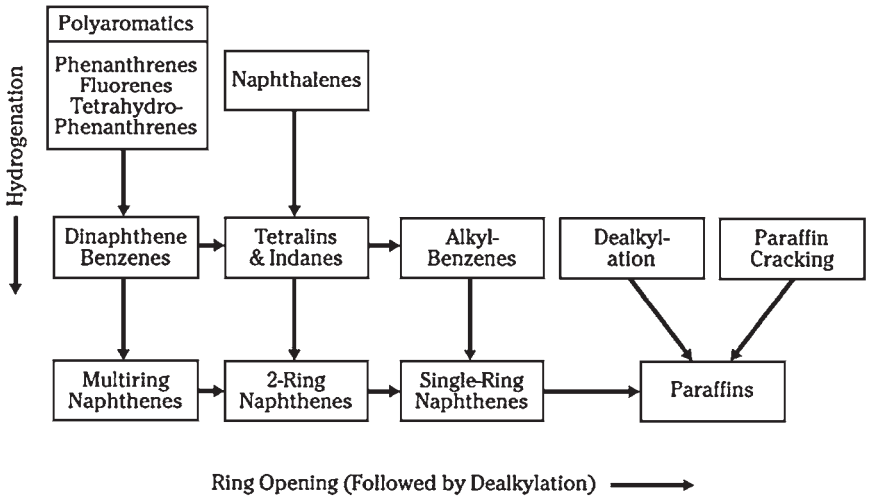

FIGURE 7.2.4 Hydrocracking reactions.

Downloaded from Digital Engineering Library @ McGraw-Hill (www.digitalengineeringlibrary.com)
Copyright © 2004 The McGraw-Hill Companies. All rights reserved.
Any use is subject to the Terms of Use as given at the website.

UOP UNICRACKING PROCESS FOR HYDROCRACKING

employ a hydroprocessing catalyst upstream, specifically designed to remove nitrogen and sulfur compounds from the feed prior to conversion. UOP catalysts such as HC-P, HC-R, HC-T, UF-210, and UF-220 are used for this service. These materials are specifically designed with high hydrogenation activity to effectively remove these compounds, ensuring a clean feed and optimal performance over the zeolitic-based catalyst.

One important consideration for catalyst selection is regenerability. Hydrocracking catalysts typically operate for cycles of 2 years between regenerations but can be operated for longer cycles, depending on process conditions. When end-of-run conditions are reached, as dictated by either temperature or product performance, the catalyst is typically regenerated. Regeneration primarily involves combusting the coke off the catalyst in an oxygen environment to recover fresh catalyst surface area and activity. Regenerations can be performed either with plant equipment if it is properly designed or at a vendor regeneration facility. Both amorphous and zeolitic catalysts supplied by UOP are fully regenerable and recover almost full catalyst activity after carbon burn.

Hydrocracking Flow Schemes

Single-Stage. The single-stage flow scheme involves full conversion through recycling of unconverted product and is the most widely used because of its efficient design resulting in minimum cost for a full-conversion operation. This scheme can employ a combination of hydrotreating and cracking catalysts or simply amorphous cracking catalysts depending on the final product required.

Once-Through. Unlike the single-stage flow scheme, the once-through flow scheme is a partial conversion option that results in some yield of unconverted material. This material is highly saturated and free of feed contaminants but is similar in molecular weight to the feed. If a refinery has a use for this unconverted product, such as FCC feed or high-quality lube base oil, this flow scheme may be preferred.

Two-Stage. In the two-stage flow scheme, feedstock is treated and partially converted once-through across a first reactor section. Products from this section are then separated by fractionation. The bottoms from the fractionation step are sent to a second reactor stage for complete conversion. This flow scheme is most widely used for large units where the conversion in the once-through first stage allows high feed rates without parallel reactor trains and the added expense of duplicate equipment.

Separate-Hydrotreat. The separate-hydrotreat flow scheme is similar to single-stage, but is configured to send reactor effluent that has been stripped of hydrogen sulfide and ammonia to the cracking catalyst. This configuration allows the processing of feedstocks with very high contaminant levels or the use of contaminant-sensitive catalysts in the cracking reactor if dictated by product demands.

The single-stage flow scheme is the most widely used hydrocracking flow scheme in commercial service. The flow scheme allows the complete conversion of a wide range of feedstocks and product recovery designed to maximize virtually any desired product. The design of this unit configuration has been optimized to reduce capital cost and improve operating performance. Greater than 95 percent on-stream efficiency is typical.

Figure 7.2.5 illustrates a typical single-stage flow scheme. Feedstock, recycle oil, and recycle gas are exchanged against reactor effluent to recover process heat and are then sent through a final charge heater and into the reactor section. The reactor section contains catalysts that allow maximum production of the desired product slate. In virtually all hydrocracking systems, the combined reactions are highly exothermic and require cold hydrogen

Downloaded from Digital Engineering Library @ McGraw-Hill (www.digitalengineeringlibrary.com)
Copyright © 2004 The McGraw-Hill Companies. All rights reserved.
Any use is subject to the Terms of Use as given at the website.

UOP UNICRACKING PROCESS FOR HYDROCRACKING

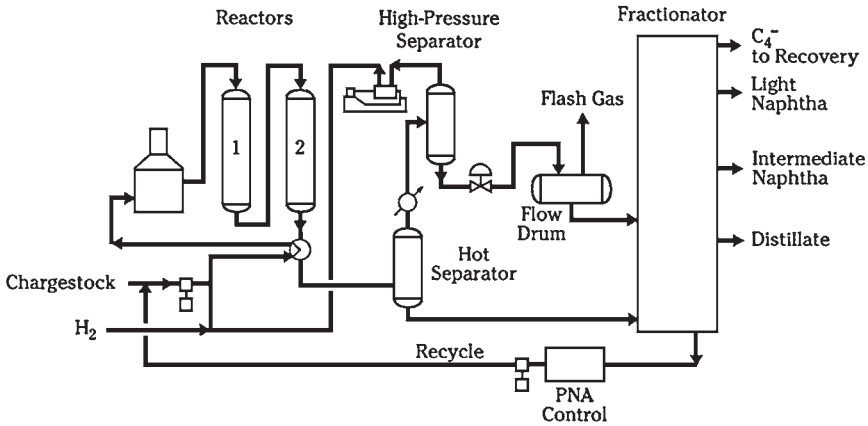

FIGURE 7.2.5 Typical flow diagram of a single-stage Unicracking unit.

quench injection into the reactors to control reactor temperatures. This injection is accomplished at quench injection points with sophisticated reactor internals that both mix reactants and quench and redistribute the mixture. Proper mixing and redistribution are critical to ensure good temperature control in the reactor and good catalyst utilization through acceptable vapor or liquid distribution.

In this typical configuration, reactor effluent is sent through exchange to a hot separator, where conversion products are flashed overhead and heavy unconverted products are taken as hot liquid bottoms. The use of a hot separator improves the energy efficiency of the process by allowing hot liquid to go to the fractionation train and prevents polynuclear aromatic (PNA) fouling of cold parts of the plant. The overhead from the hot separator goes to a cold separator, where recycle gas is separated from the product. The product is then sent to fractionation, and recycle gas is returned to the reactor via the recycle compressor.

The fractionation train typically starts with a stripper column to remove hydrogen sulfide, which is in solution with the products. The removal ensures a relatively clean product in the main fractionator column, thus reducing column costs and metallurgy requirements. The stripper is followed by a main fractionating column with appropriate stages and sidedraws to remove the desired products. The bottoms from this main column is recycled back to the reactor section for complete feed conversion.

To allow complete conversion without PNA fouling or excessive catalyst coking, UOP has developed several techniques to selectively remove PNAs from the recycle oil stream. Some PNA removal is critical for successful operation at complete conversion. In earlier designs, the unit was simply purged of PNAs by taking a bottoms drag stream. In newer units, PNAs may be selectively removed by either fractionation or adsorption. The result is an increased yield of valuable liquid product.

HyCycle. HyCycle typically uses back-staged, series-flow cracking and hydrotreating reactors. The products and unconverted oil (UCO) from the hydrotreating reactor are separated in the high-pressure section, creating the recycle oil for the cracking reactor. Similar to separate-hydrotreat and two-stage configurations, the recycle oil is contaminant-free. Because of the efficient separation of UCO from products, the recycle oil rate can be increased above typical hydrocracking levels, allowing the cracking catalyst to operate at lower severity and produce higher yields. The HyCycle configuration provides the lowest operating and equipment cost for many operations.

Downloaded from Digital Engineering Library @ McGraw-Hill (www.digitalengineeringlibrary.com)
Copyright © 2004 The McGraw-Hill Companies. All rights reserved.
Any use is subject to the Terms of Use as given at the website.

UOP UNICRACKING PROCESS FOR HYDROCRACKING

The HyCycle process uses a combination of several unique, patented design features to facilitate an economic full (99.5 percent) conversion operation at low (20 to 40 percent) conversion per pass. Another important feature of the process is reduced operating pressure. Relative to current practice, HyCycle Unicracking designs are typically 25 percent lower in design pressure. The key benefits of the process are lower hydrogen consumption and higher selectivity to heavier product. For example, up to 5 vol % more middle distillate yield with as much as a 15 percent shift toward diesel fuel can be achieved when compared to other full conversion maximum distillate designs. This shift in selectivity coupled with a more selective saturation of feed aromatics results in as much as a 20 percent reduction in process hydrogen requirement.

In the process, cracked products and unconverted oil are separated in the HyCycle enhanced hot separator (EHS) at reactor pressure. The separated products are then hydrogenated in a posttreat reactor. This unique processing step maximizes the quality of the distillate product for a given design pressure. It also provides a more efficient means of recycling UCO to the cracking reactor, enabling a less severe (lower) per pass conversion that results in improved selectivity and yield. The hydrocracking catalyst zone configuration is referred to as *back-staged* because recycle oil is routed first to a hydrocracking catalyst zone and then to a hydrotreating catalyst zone. The benefits of back-staging include cleaner feedstock to the cracking catalyst and higher hydrogen partial pressure. The net result is higher catalyst activity per unit volume, hence a lower catalyst volume requirement. The reactors use a common series flow recycle gas loop to maintain the economic efficiency of a single-stage design. In addition, UOP low-temperature catalysts are used in the reactor(s) to enable higher combined feed rates without increasing reactor diameter or pressure drop. Figure 7.2.6 illustrates a typical HyCycle flow scheme.

Products from Hydrocracking

Hydrocracking units process lower-value, sulfurous feedstocks such as vacuum distillates and cracked stocks to produce higher-value fuels. There is tremendous flexibility, through choice of catalysts and unit configuration, to optimize product quality and yield structure.

The hydrocracking process has a well-demonstrated versatility. This can be shown in the yield and product quality information shown in Table 7.2.2 for processing a Middle East VGO for maximum distillate and for maximum naphtha, the two extremes of hydrocracking operation.

Improvements in Yield-Activity Relationships

One of the difficult decisions refiners face when selecting hydrocracking technology is whether to sacrifice activity to gain yield, or sacrifice yield to gain activity. Many refiners in North America, for example, would like to increase C_6+ naphtha yield, but not at the cost of lower activity. They may also like a flexible catalyst for seasonal shifts in their product slate. Refiners in Europe and the Far East often ask for higher-activity distillate catalysts.

To meet the needs of refiners around the world, UOP continues to develop catalysts that provide enhanced performance without sacrificing yield or activity. Figure 7.2.7 shows relative activity-selectivity curves for previous and current generations of UOP hydrocracking catalysts. Selectivity to diesel product is shown on the vertical axis, and the catalyst's activity is shown on the horizontal axis. Each symbol on the curves represents a catalyst in the UOP portfolio. New generations of catalysts are currently being developed to improve these relationships.

Downloaded from Digital Engineering Library @ McGraw-Hill (www.digitalengineeringlibrary.com)
Copyright © 2004 The McGraw-Hill Companies. All rights reserved.
Any use is subject to the Terms of Use as given at the website.

UOP UNICRACKING PROCESS FOR HYDROCRACKING

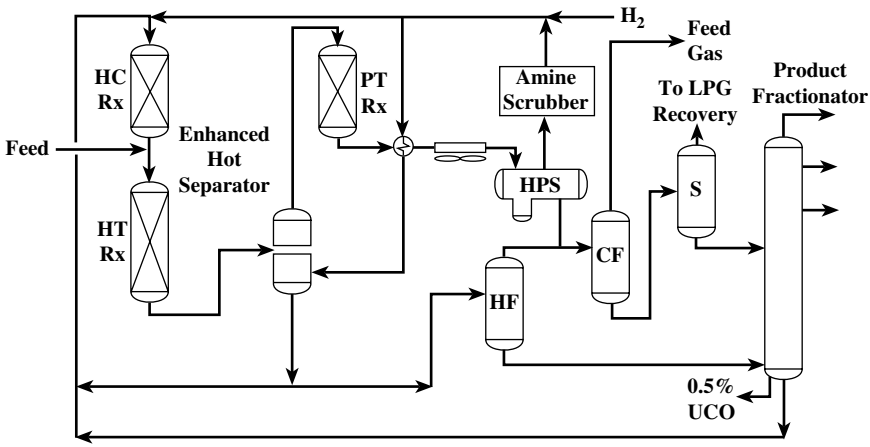

FIGURE 7.2.6 HyCycle Unicracking process schematic flow diagram.

TABLE 7.2.2 Typical Hydrocracker Yields*

	Distillate	Naphtha
Yield:		
NH_3, wt %	0.1	0.1
H_2S, wt %	2.6	2.6
C_2-, wt %	0.6	0.8
C_3, wt %	1.0	3.3
C_4, vol %	3.5	21.4
Light naphtha, vol %	7.5	39.1
Heavy naphtha, vol %	11.4	68.9
Distillate, vol %	94.0	—
Product properties:		
Jet fuel cut:		
Smoke point, mm	29	—
Freeze point, °C (°F)	−59 (−74)	—
Aromatics, vol %	9	—
Diesel fuel cut:		
Cetane no.	60	—
Total naphtha:		
P/N/A, vol	—	33/55/12
Research octane no.	—	70

*Basis: Feedstock, Middle East VGO; density, 22.2 °API; sulfur, 2.5 wt %.

Note: P/N/A = paraffins/naphthenes/aromatics; °API = degrees on American Petroleum Institute scale.

Downloaded from Digital Engineering Library @ McGraw-Hill (www.digitalengineeringlibrary.com)
Copyright © 2004 The McGraw-Hill Companies. All rights reserved.
Any use is subject to the Terms of Use as given at the website.

UOP UNICRACKING PROCESS FOR HYDROCRACKING

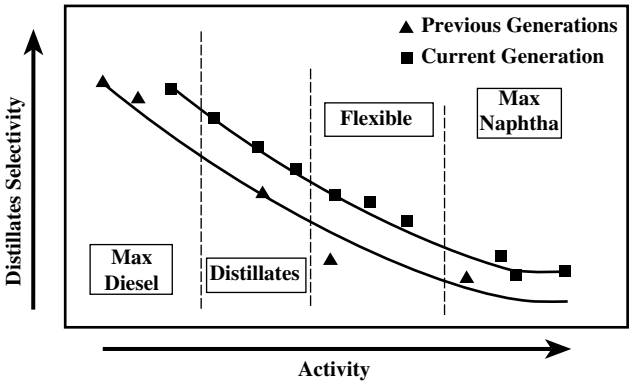

FIGURE 7.2.7 New generation Unicracking catalysts offer enhanced performance.

INVESTMENT AND OPERATING EXPENSES

Capital investment and operating expenses for a hydrocracker are sensitive to

- The processibility of the feedstock
- The desired product slate
- The desired product specifications

The desired product slate has a profound effect on the arrangement of equipment, as discussed in the previous section. If the feed has demetallized oil or is more difficult to process for some other reason, operating conditions can be more severe than in hydrocracking a VGO. This additional severity can be manifested in equipment, hydrogen consumption, utilities, and additional catalyst. In general, a jet fuel operation is more severe than an operation producing a full-range diesel product. Naphtha production requires a higher hydrogen consumption than either jet fuel or diesel production.

Only typical examples can be given; not every case can be covered. The figures in the accompanying tables are for illustrations only; variation may be expected for specific cases. Typical capital investment guidelines are given in Table 7.2.3. Typical utility guidelines are given in Table 7.2.4.

AKNOWLEDGMENTS

I wish to acknowledge Dr. Suheil Abdo for his comments on the chemistry and catalyst sections of this chapter.

Downloaded from Digital Engineering Library @ McGraw-Hill (www.digitalengineeringlibrary.com)
Copyright © 2004 The McGraw-Hill Companies. All rights reserved.
Any use is subject to the Terms of Use as given at the website.

UOP UNICRACKING PROCESS FOR HYDROCRACKING

TABLE 7.2.3 Hydrocracker Capital Investment*

Operation	Distillate	Naphtha
Estimated erected cost, $/BPSD CF	2500–3500	2000–3000

*As of January 1, 2002, based on combined-feed (CF) rate; includes 20 percent of material and labor as design engineering plus construction engineering cost; does not include hydrogen plant; BPSD = barrels per stream-day.

TABLE 7.2.4 Typical Hydrocracker Utilities

Power, kW	200–450
Fired fuel, 10^6 Btu/h	2–6
Cooling water, gal/min	40–120
Medium-pressure steam, MT/h (klb/h)	0.11–0.22 (0.25–0.50)
Condensate, MT/h (klb/h)	0.08 (0.2)

Note: Based on 1000-BPSD fresh feed; MT/h = metric tons per hour.

Downloaded from Digital Engineering Library @ McGraw-Hill (www.digitalengineeringlibrary.com)
Copyright © 2004 The McGraw-Hill Companies. All rights reserved.
Any use is subject to the Terms of Use as given at the website.

Downloaded from Digital Engineering Library @ McGraw-Hill (www.digitalengineeringlibrary.com)
Copyright © 2004 The McGraw-Hill Companies. All rights reserved.
Any use is subject to the Terms of Use as given at the website.

Source: HANDBOOK OF PETROLEUM REFINING PROCESSES

P · A · R · T · 8

HYDROTREATING

Downloaded from Digital Engineering Library @ McGraw-Hill (www.digitalengineeringlibrary.com)
Copyright © 2004 The McGraw-Hill Companies. All rights reserved.
Any use is subject to the Terms of Use as given at the website.

Downloaded from Digital Engineering Library @ McGraw-Hill (www.digitalengineeringlibrary.com)
Copyright © 2004 The McGraw-Hill Companies. All rights reserved.
Any use is subject to the Terms of Use as given at the website.

Source: HANDBOOK OF PETROLEUM REFINING PROCESSES

CHAPTER 8.1

CHEVRON LUMMUS GLOBAL RDS/VRDS HYDROTREATING—TRANSPORTATION FUELS FROM THE BOTTOM OF THE BARREL

David N. Brossard
Chevron Lummus Global
Richmond, California

INTRODUCTION

The Chevron Lummus Global (CLG) Residuum Desulfurization (RDS) and Vacuum Residuum Desulfurization (VRDS) Hydrotreating processes are used by refiners to produce low-sulfur fuel oils, and to prepare feeds for vacuum gas oil (VGO) fluid catalytic crackers (FCCs), residuum FCCs (RFCCs), visbreakers, and delayed cokers. Over half of the fixed-bed residuum hydrotreaters in operation use CLG's RDS/VRDS Hydrotreating technology.

RDS/VRDS Hydrotreaters upgrade residual oils by removing impurities and cracking heavy molecules in the feed to produce lighter product oils. Early applications of CLG's residuum hydroprocessing technology were used to remove sulfur from atmospheric residues (ARs) and vacuum residues (VRs), hence the term *desulfurization.* Today, RDS/VRDS Hydrotreaters perform equally well removing nitrogen, carbon residue (see "Process Chemistry" section), nickel, and vanadium from the oil and cracking heavy VR molecules to VGO, distillates, and naphtha products. The amount of impurities removed depends on the feed and on the product specifications desired by the refiner. Sulfur removal greater than 95 percent, metal removal (primarily nickel and vanadium) greater than 98 percent, nitrogen removal greater than 70 percent, carbon residue reduction greater than 70 percent, and cracking of vacuum residue (538°C+ material converted to 538°C−) as high as 60 liquid volume percent (LV%) have been commercially demonstrated. RDS/VRDS Hydrotreating uses fixed beds of catalyst that typically operate at moderately high pressures [150 to 200 atm (2133 to 2850 lb/in^2)] and temperatures [350 to 425°C

Downloaded from Digital Engineering Library @ McGraw-Hill (www.digitalengineeringlibrary.com)
Copyright © 2004 The McGraw-Hill Companies. All rights reserved.
Any use is subject to the Terms of Use as given at the website.

CHEVRON LUMMUS GLOBAL RDS/VRDS HYDROTREATING—TRANSPORTATION FUELS FROM THE BOTTOM OF THE BARREL

(662–797°F)] in a hydrogen-rich atmosphere (80 to 95 mol % hydrogen at the reactor inlet) to process the oil feed. The feed to a VRDS Hydrotreater is generally the VR from a crude unit vacuum column with a typical starting true boiling point (TBP) cut point of 538°C (1000°F), although cut points of 575°C (1067°F) and higher are feasible. The feed to an RDS Hydrotreater is generally AR from a crude unit atmospheric column with a typical starting TBP cut point of 370°C (698°F). Other feeds (such as solvent deasphalted oil, solvent deasphalter pitch, vacuum gas oil, and cracked gas oils from visbreakers, FCCs, RFCCs, and cokers) can also be processed in either RDS or VRDS Hydrotreaters.

Residua from many crudes have been successfully processed in RDS and VRDS Hydrotreaters. Table 8.1.1 shows a partial list of crudes that have been commercially processed in CLG RDS/VRDS Hydrotreaters.

The range of feeds which can be economically processed in RDS/VRDS Hydrotreaters expands significantly when On-Stream Catalyst Replacement (OCR) technology is added to the unit. OCR technology allows spent catalyst to be removed from a guard reactor and be replaced by fresh catalyst while the reactor remains in service. This enables the refiner to process heavy, high-metal feeds or to achieve deeper desulfurization from a fixed-bed residuum hydrotreater (see Chap. 10.1).

HISTORY

Hydrotreating of residual oils was a natural extension of hydrotreating distillate oils and VGOs to remove sulfur.[1,2,3] CLG's first commercial RDS Hydrotreater was commissioned in 1969. Typical of many early residuum hydrotreaters, CLG's first RDS Hydrotreater was designed to remove sulfur to produce low-sulfur fuel oil (LSFO). CLG's first VRDS Hydrotreater, commissioned in 1977, was also designed to produce LSFO.

In 1984 Okinawa Sekiyu Seisei, a Japanese refiner, first reported[4] the operation of a CLG RDS Hydrotreater in "conversion mode." In this operation, the reactor temperature

TABLE 8.1.1 RDS/VRDS Hydrotreater Feedstocks That Have Been Commercially Processed

A.A. Bu Khoosh	Kuwait
Alaskan North Slope	Laguna
Algerian	Margham C.
Arabian Berri	Maya
Arabian Heavy	Mina Saud
Arabian Light	Minas
Arabian Medium	Murban
Basrah Light	Oguendjo
Cabinda	Oman
Colombian Limon	Qatar Land
Dubai	Qatar Marine
Duri	Russian
El Chaure	Shengli No. 2
Gipsland	Statfjord
Indonesian	Suez
Iranian Heavy	Tia Juana Pesado
Iranian Light	Umm Shaif
Isthmus	West Texas Intermediate
Khafji	West Texas Sour
Kirkuk	Zakum

Downloaded from Digital Engineering Library @ McGraw-Hill (www.digitalengineeringlibrary.com)
Copyright © 2004 The McGraw-Hill Companies. All rights reserved.
Any use is subject to the Terms of Use as given at the website.

CHEVRON LUMMUS GLOBAL RDS/VRDS HYDROTREATING—TRANSPORTATION FUELS FROM THE BOTTOM OF THE BARREL

was raised fairly high early in the run—much higher than required to simply produce low-sulfur fuel oil—and held high until the end of run. This operation hydrocracked as much VR as possible to lighter boiling products (VR was "converted" to light products). It also shortened the run length because of higher catalyst deactivation from coke deposited on the catalyst through more of the run. Conversion mode operation has been favored by many RDS/VRDS Hydrotreater operators in recent years to minimize the production of fuel oil.

An alternative to destroying low-value fuel oil has been to convert it to higher value fuel oil. During the late 1970s and through the 1980s and 1990s, the demand for and value of high-sulfur (3 percent) fuel oil and low-sulfur (1 percent) fuel oil dropped. In some cases, power plant operators have been willing to pay higher prices for fuel oils with much lower sulfur content (0.1 to 0.5 wt %). RDS/VRDS Hydrotreating enabled refiners to produce these lower-sulfur fuel oils. The lowest-sulfur fuel oil commercially produced from sour crudes (about 3 wt % sulfur in the AR) was 0.1 wt %. This fuel oil was produced by the CLG RDS Hydrotreater at Idemitsu Kosan's refinery in Aichi, Japan (see Table 8.1.2).

The ability of residuum hydrotreaters to improve the economics of conversion units by pretreating their feeds has been understood for many years. The most noticeable economic impact of feed pretreatment is to lower the sulfur content of the feed to the conversion unit. For example, pretreatment of RFCC feed to reduce its sulfur to less than 0.5 wt % eliminates the need to install costly flue gas desulfurization facilities. Addition of hydrogen to the feed by the hydrotreater also improves the product yields and product qualities of the downstream conversion unit. In 1983, at Phillips' Borger, Texas, refinery, the first CLG RDS Hydrotreater was commissioned to pretreat residuum to feed an existing RFCC unit. Prior to the hydrotreater project, the RFCC had been feeding sweet domestic crude. The 50,000 barrel per day (BPD) RDS Hydrotreater was designed to achieve 92 percent hydrodesulfurization (HDS) and 91 percent hydrodemetallization (HDM) from a mixed domestic and Arabian Heavy AR for a 1-year cycle. In addition to its contribution toward meeting environmental requirements and reducing catalyst usage, the feed pretreatment significantly increased the gasoline yield from the RFCC.[5]

An RDS Hydrotreater is used to pretreat residuum to feed a delayed coker unit at Chevron Texaco's refinery in Pascagoula, Mississippi.[6] The hydrotreater was originally

TABLE 8.1.2 Production of Premium Low-Sulfur Fuel Oil

	RDS feed	RDS 343°C+ product
Sulfur, wt %	3.75	0.09
Viscosity, cSt at 50°C	248	84
Specific gravity, $d^{15/4}$°C	0.9590	0.9105
Carbon residue, %	7.95	2.28
Ni/V, ppm	13/40	<1/<1
Nitrogen, ppm	2060	644
Distillation, °C		
IBP	257	272
5%	325	330
10%	353	358
20%	402	393
30%	435	425
40%	467	450
50%	502	480
60%	537	515
70%	—	555

Commercial data from IKC Aichi RDS unit.

Downloaded from Digital Engineering Library @ McGraw-Hill (www.digitalengineeringlibrary.com)
Copyright © 2004 The McGraw-Hill Companies. All rights reserved.
Any use is subject to the Terms of Use as given at the website.

CHEVRON LUMMUS GLOBAL RDS/VRDS HYDROTREATING—TRANSPORTATION FUELS FROM THE BOTTOM OF THE BARREL

designed to remove sulfur and metals from the feed to the coker so that the coke would have less sulfur and metals and be easier to sell. Since its commissioning in 1983, the RDS unit has provided significant economic benefit to the refinery. Coke production has been reduced and the proportion of light products is higher than it would have been without the RDS. This includes converting VR (which would otherwise be fed to the coker) to VGO, diesel, and naphtha in the RDS Hydrotreater. In addition, the hydrotreated VR from the RDS produces lower weight percent coke in the coker than the straight-run VR. Both of these effects lead to lower coke production and more light products from the refinery. The RDS Hydrotreater at Pascagoula remains the largest residuum hydrotreater in the world at 96,000 BPD.

Refiners have been hydrotreating residuum for over 25 years. In that time, residuum hydrotreating has changed with the needs of refiners from its initial function of removing sulfur from fuel oil to converting residuum directly and to improving the economics of downstream conversion units. Fixed-bed residuum hydrotreating continues to be a popular route to residuum conversion.

PROCESS DESCRIPTION

A simplified flow diagram for a CLG RDS/VRDS Hydrotreater is shown in Fig. 8.1.1.

Oil feed to the RDS/VRDS Hydrotreater (AR or VR primarily, but may also include VGO, solvent deasphalted oil, solvent deasphalter pitch, and others) is combined with makeup hydrogen and recycle hydrogen and heated to the reactor inlet temperature. Heat is provided from heat exchange with the reactor effluent and by a reactor charge heater.

The reaction of hydrogen and oil occurs in the reactors in the presence of the catalyst. Hydrotreating reactions on the catalyst remove sulfur, nitrogen, vanadium, nickel, carbon residue, and other impurities from the residuum; hydrogenate the molecules; and crack the residue to lighter products. The required catalyst average temperature (CAT) is initially low, but is gradually increased by 45°C (81°F) or more as the catalyst ages. The net hydrotreating reactions (such as sulfur and metals removal) are exothermic (see "Process Chemistry"). To prevent reactor temperatures from getting too high, quench gas—cold

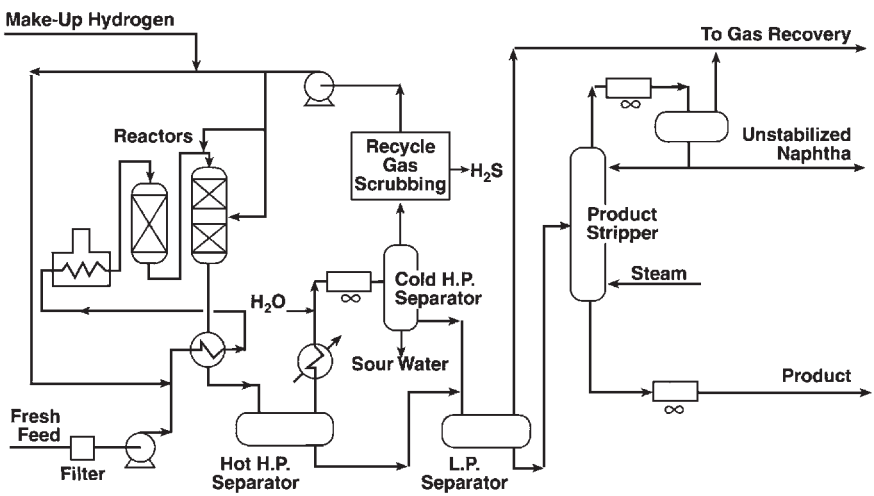

FIGURE 8.1.1 Simplified RDS/VRDS flow scheme.

Downloaded from Digital Engineering Library @ McGraw-Hill (www.digitalengineeringlibrary.com)
Copyright © 2004 The McGraw-Hill Companies. All rights reserved.
Any use is subject to the Terms of Use as given at the website.

CHEVRON LUMMUS GLOBAL RDS/VRDS HYDROTREATING—TRANSPORTATION FUELS FROM THE BOTTOM OF THE BARREL

recycled hydrogen gas—is added between reactors and between catalyst beds of multiple-bed reactors to maintain reactor temperatures in the desired range.

Reactors in hydrotreating service have carefully designed internals to assure good distribution of gas and liquid. In multiple-bed reactors, quench spargers disperse the quench gas evenly across the reactor to maintain even reactor temperatures. CLG provides both single-bed and multiple-bed RDS/VRDS reactors, depending on the needs of the refiner. Single-bed reactors are relatively small, typically 400,000 to 900,000 kg in weight, and therefore single-bed reactors are easier to install and to unload catalyst from than multiple-bed reactors. Multiple-bed reactors tend to be larger, 600,000 to 1,200,000 kg, but take up less plot space in a refinery compared to several single-bed reactors. This is very important in refineries where space is limited.

The reactor effluent is cooled (by heat exchange with the reactor feed) to recover the heat released from the hydrotreating reactions. This heat exchange helps to reduce the fuel required in the feed heater. After cooling, the reactor effluent is flashed in the hot, high-pressure separator (HHPS) to recover hydrogen and to make a rough split between light and heavy reaction products. The reactor effluent heat exchange maintains the HHPS at a constant temperature, which is important in protecting the reaction products. If the HHPS temperature is too high, thermal cracking and coking reactions might take place in the HHPS (in the absence of catalyst) and downstream (in the absence of hydrogen and catalyst) and might degrade the oil. The liquid from the HHPS is let down in pressure, sent to the low-pressure separators, and then on to the product fractionator.

The HHPS vapor is cooled and water is injected to absorb hydrogen sulfide (H_2S) and ammonia (NH_3) produced in the reactors by the hydrotreating reactions. The mixture is further cooled to condense the product naphtha and gas oil and is flashed in the cold, high-pressure separator (CHPS). The CHPS separates the vapor, liquid water, and the liquid light hydrocarbons. The hydrocarbon liquid is let down in pressure and sent to the low-pressure separators. The water is sent to a sour water recovery unit for removal of the hydrogen sulfide and ammonia.

The hydrogen-rich gas from the CHPS flows to the H_2S absorber. There the H_2S that was not removed by the injected water is removed through contact with a lean amine solution. The purified gas flows to the recycle compressor where it is increased in pressure so that it can be used as quench gas and recombined with the feed oil.

Hydrogen from the reactors is purified and recycled to conserve this expensive raw material. Recycling the hydrogen is also important to provide high gas flow rates. High gas-to-feed-oil ratios provide a desirable excess of hydrogen in the reactors (see "Process Chemistry" section) and ensure good gas and liquid flow distribution in the reactors. The recycle hydrogen gas is also used for reactor quench.

Liquid from the low-pressure separators is fed to the atmospheric fractionator, which splits the hydroprocessed oil from the reactors into the desired final products.

PROCESS CHEMISTRY

Heteroatoms

Any atom in a crude oil molecule which is neither hydrogen nor carbon is called a *heteroatom.* Heteroatoms include sulfur, nitrogen, oxygen, nickel, vanadium, iron, sodium, calcium, and other less common atoms.

Carbon Residue

Carbon residue is a measurement of the tendency of a hydrocarbon to form coke. Expressed in weight percent, carbon residue is measured by microcarbon residue (MCR;

Downloaded from Digital Engineering Library @ McGraw-Hill (www.digitalengineeringlibrary.com)
Copyright © 2004 The McGraw-Hill Companies. All rights reserved.
Any use is subject to the Terms of Use as given at the website.

CHEVRON LUMMUS GLOBAL RDS/VRDS HYDROTREATING—TRANSPORTATION FUELS FROM THE BOTTOM OF THE BARREL

American Society for Testing and Materials specification ASTM D4530), by Conradson carbon residue (CCR; ASTM D189), a considerably older test, or by Ramsbottom carbon residue (RCR; ASTM D524). MCR is the preferred measurement technique because it is more accurate than the other methods and requires a smaller sample. Instruments that measure MCR are very inexpensive. MCR is roughly equivalent to CCR and both correlate well to RCR. Carbon residue is useful in predicting the performance of a hydrocarbon in a coker or FCC unit. While carbon residue is not a direct measure, it does correlate well with, the amount of coke formed when the oil is processed in cokers or FCCs.

Asphaltenes

Residual oil is composed of a broad spectrum of molecules. The number of specific molecules in residual oil is too large to classify, and therefore researchers have developed analytical techniques for separating these molecules for better understanding. The most common separation of residual oils is into asphaltenes and maltenes. This is done by diluting the residue with large quantities of normal paraffins such as *n*-heptane or *n*-pentane. The maltene fraction will remain in solution with the paraffin phase while the asphaltene fraction will form a separate phase. This is the principle behind the refinery process called solvent deasphalting (SDA).

The molecules in the maltene fraction can be further separated into fractions of varying polarity by being passed over columns packed with different adsorbents. A full description of these separation techniques is provided by Speight.[7]

There is considerable disagreement about what constitutes an asphaltene molecule beyond its insolubility in a paraffinic solvent. Still, the subject of asphaltenes is important. The high concentration of heteroatoms in the asphaltenes requires that at least some of the asphaltene molecules be hydrotreated to have high removals of the heteroatoms. In addition, the hydrogen content of asphaltene molecules must be increased if they are to be transformed to transportation fuels.

Converting asphaltene molecules to nonasphaltene molecules is a major challenge for refiners. As processing VR or AR becomes more severe, coke is formed (in FCCs or cokers, for example) or the asphaltenes become insoluble in the processed residuum and precipitate out in a sticky, equipment-plugging material commonly referred to as *dry sludge.* Of course, the asphaltenes were soluble in the maltenes in the original residuum, so the processing must have caused some change to the maltenes, or to the asphaltenes, or to both. Dry sludge formation usually limits the practical severity in which residuum can be processed in many conversion units including residuum hydroprocessing units (see "Dry Sludge Formation" below).

Hydroprocessing Reactions

Reactions in an RDS or VRDS Hydrotreater take place in the liquid phase, since much of the residual feed and product molecules do not vaporize at reactor pressure and temperature. The oil in the reactor is saturated with hydrogen gas because the partial pressure of hydrogen is very high and hydrogen is available in great excess (typically 10 to 30 moles of hydrogen for each mole of oil feed). The oil and hydrogen reactant molecules diffuse through the liquid oil filling the catalyst pores and adsorb onto the catalyst surface where the hydrotreating reactions take place. Larger molecules tend to adsorb more strongly onto the catalyst surface than smaller molecules. This means that the large VR molecules tend to dominate the reactions on the catalyst when they can successfully diffuse into the catalyst pores. The product molecules must then desorb from the catalyst surface and diffuse out through the liquid that fills the catalyst pores.

Downloaded from Digital Engineering Library @ McGraw-Hill (www.digitalengineeringlibrary.com)
Copyright © 2004 The McGraw-Hill Companies. All rights reserved.
Any use is subject to the Terms of Use as given at the website.

CHEVRON LUMMUS GLOBAL RDS/VRDS HYDROTREATING—TRANSPORTATION FUELS FROM THE BOTTOM OF THE BARREL

On the catalyst surface, sulfur, nitrogen, nickel, and vanadium atoms are removed from the residual molecules, and carbon-to-carbon bonds are broken. These reactions generally lead to cracking the original oil molecules to smaller molecules, which boil at a lower temperature. As a result the viscosity of the oil is also reduced. When the product is used as fuel oil, less volume of expensive cutter stock (such as jet or diesel) is required to meet a given viscosity specification.

Hydrotreating is very exothermic. The heat produced by the reactions causes the gas and oil to increase in temperature as they pass down through the catalyst beds. The temperature in the reactors is controlled by the addition of hydrogen quench gas between reactors and between catalyst beds within a reactor. The heat produced by the reactions is recovered in the reactor effluent heat exchangers and used to preheat the feed upstream of the feed furnace.

There are fundamental differences between the removal of the different impurities, largely because of the structure of the molecules in the residuum. Sulfur atoms tend to be bound in the oil as "sulfur bridges" between two carbon atoms or to be contained in a saturated ring structure (see Fig. 8.1.2). Removal of these sulfur atoms usually requires only the breaking of the two sulfur-carbon bonds per sulfur atom and the subsequent addition of four atoms of hydrogen to cap the ends of the bonds that were broken. When the part of the molecule that contains the sulfur can access the catalyst surface, sulfur removal is relatively easy. Figure 8.1.3 shows the hydroprocessing reactions of dibenzothiophene as an example of a sulfur-bearing petroleum molecule. The reaction pathway to produce phenylbenzene is favored because it does not require the saturation of an aromatic ring structure.

Nitrogen atoms tend to be bound in the aromatic rings in the residual molecules (see Fig. 8.1.4). It is usually necessary to saturate the aromatic ring that contains the nitrogen atom with hydrogen before the nitrogen-carbon bonds can be broken and the nitrogen removed. This requirement to saturate aromatic rings makes the removal of nitrogen much more difficult than the removal of sulfur. Figure 8.1.5 shows the hydroprocessing reactions of quinoline as an example of a nitrogen-bearing petroleum molecule. The first step along any reaction pathway toward removal of the nitrogen atom is the saturation of an aromat-

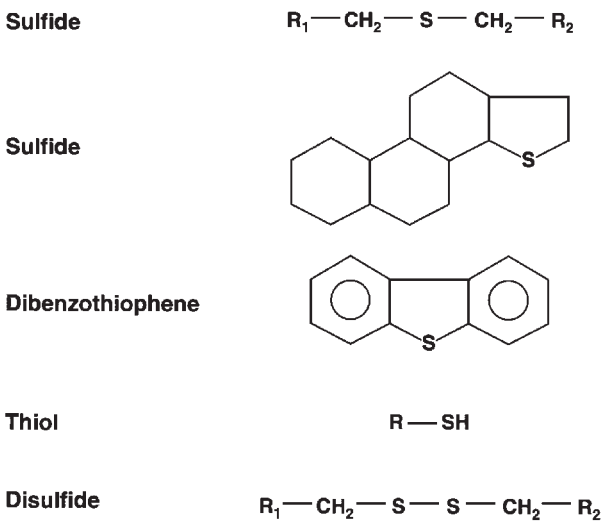

FIGURE 8.1.2 Typical petroleum molecules that contain sulfur atoms. Sulfur atoms usually have simple chemical bonds in petroleum.

Downloaded from Digital Engineering Library @ McGraw-Hill (www.digitalengineeringlibrary.com)
Copyright © 2004 The McGraw-Hill Companies. All rights reserved.
Any use is subject to the Terms of Use as given at the website.

CHEVRON LUMMUS GLOBAL RDS/VRDS HYDROTREATING—TRANSPORTATION FUELS FROM THE BOTTOM OF THE BARREL

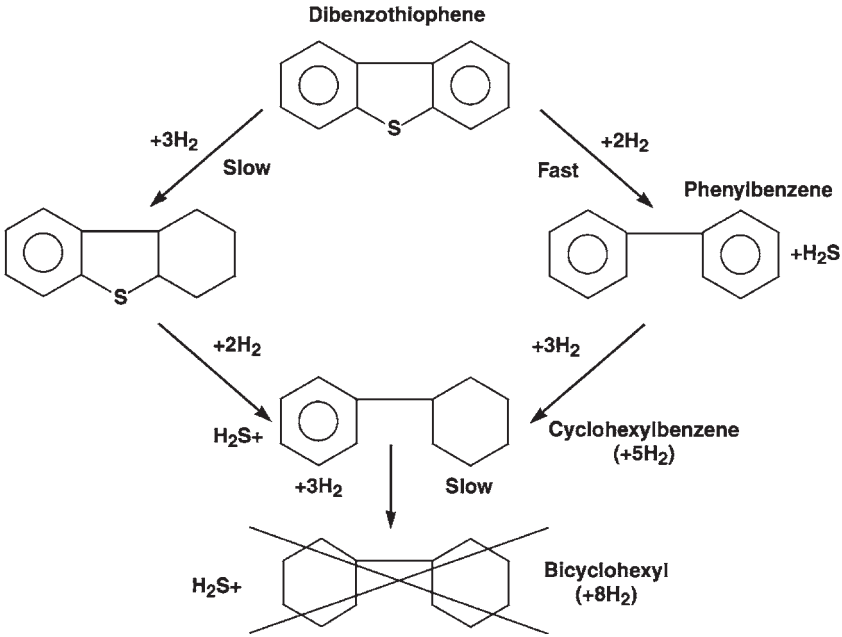

FIGURE 8.1.3 Typical desulfurization reaction. Sulfur can usually be removed without having to saturate aromatic rings.

ic ring structure. The amount of nitrogen removed is almost always lower than that of sulfur because of the relative difficulty of the reactions. Also, high levels of removal of nitrogen require high hydrogen partial pressure and catalysts with very high hydrogenation activity.

Nickel and vanadium atoms are generally bound into a porphyrin structure in the residue. Figure 8.1.6 shows a typical vanadyl-porphyrin molecule. These structures are quite flat, and the metals are relatively easy to remove if the catalyst has sufficiently large pores to accommodate the large molecules that contain them. Vanadium tends to be much easier to remove than nickel.

The removed sulfur and nitrogen are converted into hydrogen sulfide and ammonia gases. The hydrogen sulfide and ammonia diffuse out of the catalyst pore with the other reactants. The removed nickel and vanadium are bound up with sulfur and remain on the catalyst surface. Fresh hydrotreating catalyst undergoes a very rapid fouling as its fresh active metals are covered with a layer of nickel and vanadium from the crude. Fortunately, nickel and vanadium are themselves catalytic metals (although much less active than the original catalytic metals), therefore the catalyst surface retains some activity, though considerably less than the fresh catalyst. Eventually, however, the nickel and vanadium sulfide molecules fill up the catalyst pores and reduce the ability of the large residuum molecules to diffuse through the liquid filling the pores. When access of the residuum molecules to the catalyst surface becomes severely restricted, the catalyst has lost its hydrotreating activity (see "Catalysts" below).

Other undesirable side effects of the hydroprocessing reactions occur if some of the high molecular weight residuum molecules that adsorb onto the catalyst surface react with other oil molecules instead of with hydrogen. This is a particular problem when the hydro-

Downloaded from Digital Engineering Library @ McGraw-Hill (www.digitalengineeringlibrary.com)
Copyright © 2004 The McGraw-Hill Companies. All rights reserved.
Any use is subject to the Terms of Use as given at the website.

CHEVRON LUMMUS GLOBAL RDS/VRDS HYDROTREATING—TRANSPORTATION FUELS FROM THE BOTTOM OF THE BARREL

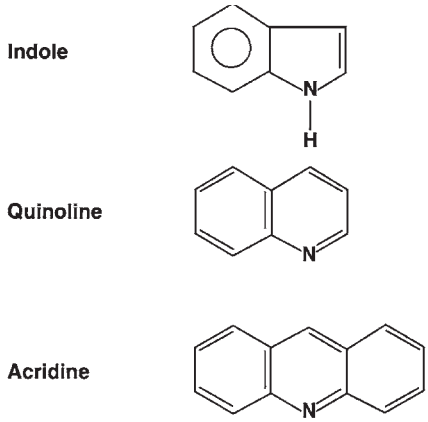

FIGURE 8.1.4 Typical petroleum molecules that contain nitrogen atoms. Nitrogen atoms usually have complex, aromatic bonds in petroleum.

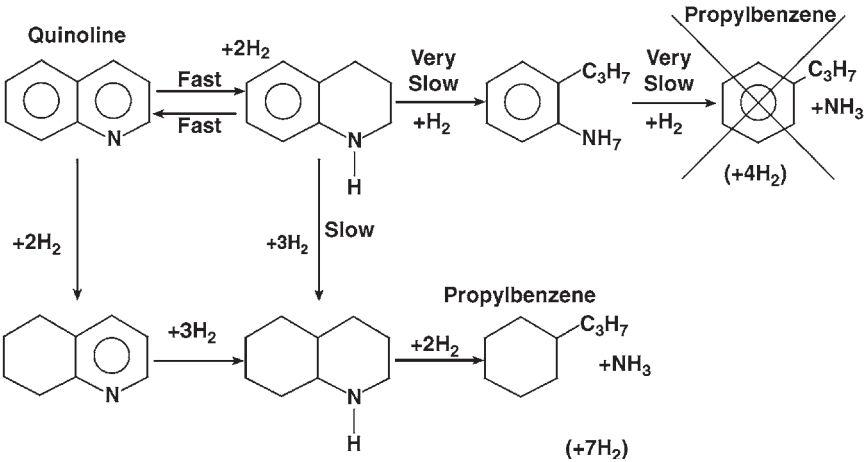

FIGURE 8.1.5 Typical denitrification reaction. Nitrogen can seldom be removed without saturating aromatic rings.

gen partial pressure in the reactor is low. In this case, the molecules grow larger. If they grow large enough they may not readily desorb from the catalyst surface, but remain on the catalyst surface as coke. The coke formed in this fashion leads to a severe deactivation of the catalyst.

Dry Sludge Formation

One other undesirable effect of hydroprocessing reactions is that the solubility of the asphaltenes usually decreases with increased processing of the residue. This occurs even

Downloaded from Digital Engineering Library @ McGraw-Hill (www.digitalengineeringlibrary.com)
Copyright © 2004 The McGraw-Hill Companies. All rights reserved.
Any use is subject to the Terms of Use as given at the website.

CHEVRON LUMMUS GLOBAL RDS/VRDS HYDROTREATING—TRANSPORTATION FUELS FROM THE BOTTOM OF THE BARREL

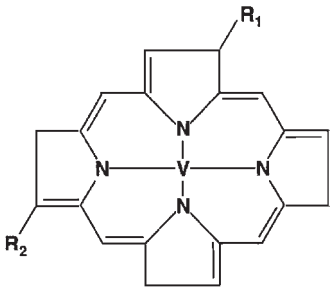

FIGURE 8.1.6 Typical vanadyl-porphyrin molecule. Porphyrin structures are very flat and vanadium is easily removed—if the molecules can diffuse through the catalysts' pores.

though the quantity of asphaltenes is reduced during the hydroprocessing. Unfortunately, while the asphaltenes are destroyed by being hydrogenated and cracked, the maltene fraction of the residue is also being hydrogenated and cracked—usually more severely than the asphaltenes. Since the maltenes are generally smaller molecules, it is easy for them to diffuse into the catalyst pores and be hydrotreated. In this hydrotreatment, aromatic rings are hydrogenated and aliphatic side chains are removed by cracking. These reactions reduce the ability of the maltene fraction to solubilize the asphaltenes. Usually, the loss of solubility of the maltenes for the asphaltenes occurs faster than the asphaltenes can be converted and the asphaltenes drop out of solution. The precipitated asphaltenes create dry sludge, which plugs up equipment, and, at its worst, can deposit in the catalyst and eventually form coke. This rapidly deactivates the catalyst. Even when the dry sludge does not deactivate the catalyst or cause operating problems by plugging equipment in the residuum hydrotreater, it can cause problems in the downstream processing units or make the product fuel oil unsalable.

Conversion

Hydrocracking is the transformation of larger, high-boiling-point hydrocarbons into smaller, lower-boiling-point hydrocarbons in the presence of hydrogen. In residuum hydrotreating, this transformation can take place because of the breaking of a carbon-to-carbon bond or because of the removal of a heteroatom that was bonding to two otherwise unconnected pieces of hydrocarbon. Since many of the carbon atoms in VR are in aromatic rings, it is necessary to hydrogenate the molecules and saturate the rings before bonds can be broken and the molecules cracked.

In residuum hydroprocessing, it is common to refer to the hydrocracking of the residue as conversion. In this usage, conversion is defined as the destruction of residue boiling higher than a certain true boiling point temperature [usually 538°C (1000°F)] to product boiling lower than that temperature. Conversion can be calculated as $(F_{T+} - P_{T+})/F_{T+}$, where F_{T+} is the volume fraction of the feed boiling above temperature T and P_{T+} is the volume fraction of the product boiling above temperature T. The hydroprocessing of the residue and conversion of the residue are linked; it is not possible to do one without doing the other. For most conventional residuum hydrotreating catalysts, conversion is primarily a function of the catalyst temperature and the space velocity.

It has been noted[4] that the formation of dry sludge is related to the level of conversion of the residuum hydrotreater. This is certainly true when the catalyst and feed are not

Downloaded from Digital Engineering Library @ McGraw-Hill (www.digitalengineeringlibrary.com)
Copyright © 2004 The McGraw-Hill Companies. All rights reserved.
Any use is subject to the Terms of Use as given at the website.

CHEVRON LUMMUS GLOBAL RDS/VRDS HYDROTREATING—TRANSPORTATION FUELS FROM THE BOTTOM OF THE BARREL

changed significantly. The presence of VGO in the feed can lower the conversion at which sludge formation becomes a problem (because of the poor ability of hydroprocessed VGO to solubilize asphaltenes). Small-pore, high-surface-area catalysts can also have a deleterious effect on product stability because they can selectively hydroprocess maltene molecules without destroying any asphaltene molecules. Generally, fixed-bed residuum hydrotreaters achieve conversions between 20 and 60 LV % at normal operating conditions and the onset of dry sludge occurs generally between 45 and 60 LV % conversion depending on the feed, processing conditions, and catalyst system.

Note that the VGO in the feed to an RDS Hydrotreater is a very poor solvent for asphaltenes—particularly after it becomes highly hydrogenated. VRDS Hydrotreaters, therefore, can operate at 5 to 10 percent higher cracking conversion than RDS Hydrotreaters before the onset of dry sludge formation.

CATALYSTS

Designing residuum hydroprocessing catalyst for high activity is a compromise. Early catalysts, which had been developed to hydrotreat light oils, had pore sizes that were too small to hydrotreat residuum; The catalyst pores became plugged with metals and coke and were very quickly deactivated. Catalysts were modified for AR and VR hydroprocessing by increasing their pore sizes, but this led to less active surface area and much lower activity for hydroprocessing reactions.

Fixed-bed residuum hydrotreating catalysts are generally small, extruded pellets made from an alumina base. The pellets are impregnated with catalytic metals—often called *active metals*—that have good activity for hydrogen addition reactions. Active metals that are used for RDS/VRDS Hydrotreater catalysts include cobalt, nickel, molybdenum, and other more proprietary materials. The catalyst pellets are usually small, 0.8 to 1.3 mm in diameter, because the reaction kinetics are usually diffusion-limited; a small catalyst pellet with high surface-to-volume ratio has better diffusion for the relatively large residuum molecules, and this leads to better reactivity. Different shapes of extruded pellets are often used to take advantage of the high surface-to-volume ratio of some shaped pellets while still maintaining reasonable reactor pressure drop.

The pore diameters of residuum hydrotreating catalysts need to be quite large, relative to catalysts found in other refinery processes, to accommodate the large residuum molecules that need to be treated. Unfortunately, as the size of the pores increases, the surface area decreases and so does the catalyst activity. Another complication is that, as the nickel and vanadium atoms are removed from the residuum, they form nickel and vanadium sulfides that deposit on the catalyst surface. The metal sulfides build up on the active surface and fill up the catalyst pores. The metal sulfides tend to deposit near the openings of the catalyst pores and plug these pore openings. This is because the residuum molecules that contain nickel and vanadium are quite large and do not diffuse far into the catalyst pores before they are removed. The diffusion of the large residuum molecules is reduced even further by the plugging of the pore openings by the metal sulfides. If the large molecules cannot enter the pores and thus have no access to the active catalyst surface, they cannot be hydrotreated.

To overcome the limitations of the small pore versus large pore trade-off, CLG designs systems of catalyst that are layered such that catalyst activity increases as the residuum moves through the reactor. The catalysts that the residue first contacts have large pores to successfully remove the vanadium and nickel from the large molecules that contain these impurities and to resist deactivation (due to pore plugging) from these removed metals. Later catalysts, which see lower nickel- and vanadium-content oil, can have smaller pores and higher surface activity to perform more hydrotreating reactions.

Downloaded from Digital Engineering Library @ McGraw-Hill (www.digitalengineeringlibrary.com)
Copyright © 2004 The McGraw-Hill Companies. All rights reserved.
Any use is subject to the Terms of Use as given at the website.

CHEVRON LUMMUS GLOBAL RDS/VRDS HYDROTREATING—TRANSPORTATION FUELS FROM THE BOTTOM OF THE BARREL

CLG's RDS and VRDS catalysts are developed and produced by advanced Refining Technology (ART), a joint venture of Chevron Texaco and Grace Division. CLG generally calls its most metal-tolerant metal-removal catalysts *hydrodemetallization* catalysts. However, CLG's HDM catalysts also promote hydrodesulfurization, hydrodenitrification (HDN), and other conversion reactions. Catalysts which have higher activity for HDS reactions and carbon residue reduction, and less tolerance for metals, are called *hydrodesulfurization catalysts.* HDS catalysts also have good reactivity for HDM and HDN reactions and cracking conversion in addition to being somewhat metal-tolerant (although not as metal-tolerant as HDM catalysts). Finally, CLG has a few catalysts that have very high activity for HDN reactions. They are the most difficult reactions to achieve in an RDS/VRDS Hydrotreating unit. HDN catalysts are also very active for HDS, carbon residue reduction, and cracking conversion. They tend to have little demetallization activity and are not very tolerant to metal poisoning.

Selecting the amounts and types of catalysts for an RDS/VRDS Hydrotreater requires extensive pilot plant data, commercial plant data, and a good reactor kinetics model.

VRDS HYDROTREATING

In many countries the demand for gasoline relative to middistillate is much lower than the typical product slate from a refinery that relies on an FCC for its conversion capacity. Many projects have relied on VGO hydrocracking to give high yields of top-quality middle distillates (see Chap. 7.2).

Given the attractiveness of using the VGO component as hydrocracker feed, it has become an important consideration that the residuum hydrotreater be capable of efficiently processing 100 percent VR. CLG VRDS Hydrotreating has been successfully processing this difficult feedstock since 1977.

The characteristics of an acceptable RFCC feedstock are as shown in Table 8.1.3. These requirements are readily obtained by CLG RDS units and can be met in a CLG VRDS for VRs derived from Arabian Heavy, Arabian Light, and Kuwait as well as most other popular crude oils.

VR is more difficult to hydrotreat than AR because there is no easily processed VGO in the feed. Therefore, VRDS relies heavily on the ability of catalysts to upgrade the heavy compounds found in the VR. CLG and ART have tailored catalysts for use in either RDS or VRDS service. Catalysts designed for RDS operation are not necessarily effective for VRDS service and vice versa.

The effectiveness of the catalyst for upgrading VR is indicated by the amount of demetallization, asphaltene removal, and desulfurization achieved while still producing a stable product (no solid or asphaltene precipitation). Table 8.1.4 shows an example of VRDS pilot plant processing of an Arabian Heavy/Kuwait VR mixture to 99 percent HDM, 97 percent HDS, and 82 percent carbon residue reduction. While such high severity is seldom required, it clearly illustrates the capability of the VRDS process.

TABLE 8.1.3 RFCC Feed Targets

Sulfur	0.5% max. to avoid flue gas desulfurization in the RFCC
Carbon residue	7–10% max. to limit catalyst cooling requirements
Nickel + vanadium	5–25 ppm to limit RFCC catalyst consumption
Crackability	A combination of hydrogen content, boiling range, and viscosity that promotes vaporization and cracking at the injection point

Downloaded from Digital Engineering Library @ McGraw-Hill (www.digitalengineeringlibrary.com)
Copyright © 2004 The McGraw-Hill Companies. All rights reserved.
Any use is subject to the Terms of Use as given at the website.

CHEVRON LUMMUS GLOBAL RDS/VRDS HYDROTREATING—TRANSPORTATION FUELS FROM THE BOTTOM OF THE BARREL

TABLE 8.1.4 Chevron VRDS Pilot Plant Performance

VRDS Feed*	VRDS Product	
Boiling range, °C	538+	343+
Gravity, °API	4.6	18.1
CCR, wt %	23.1	5.7
Sulfur, wt %	5.3	0.24
Nitrogen, wt %	0.42	0.15
Nickel+ vanadium, ppm	195	3
Viscosity, cSt at 100°C	5500	32
538°C+ conversion, LV %	54.2	
343°C+ yield, LV %	81.4	
H_2 consumption, SCFB	1650	

*Arabian Heavy/Kuwait in 50/50 volume ratio.

Note: °API = degrees on American Petroleum Institute scale; SCFB = standard cubic feet per barrel.

VRDS reactors must handle very viscous feeds relative to RDS reactors. The unusual two-phase flow reactor hydrodynamics encountered with VR feeds dictate special design considerations to avoid unreasonably high and unstable reactor pressure drops. This was the subject of a considerable amount of pilot plant and scaleup testing prior to the start-up of the first VRDS Hydrotreater in 1977 at Chevron Texaco El Segundo refinery. Experience gained on processing 100 percent VR at El Segundo, together with data from the earlier laboratory study, were the basis for the design of a VRDS Hydrotreater for the Nippon Petroleum Refining Company that was started up at their Muroran, Japan, refinery in 1982.[8] Extensive experience with 100 percent VR has enabled CLG to produce a trouble-free technology.

Converting RDS to VRDS

The RDS Hydrotreater at the Mizushima refinery of the Japan Energy Company (formerly the Nippon Mining Company) operated with AR for several years and was successfully converted to process VR in 1981.[9] For the next few catalyst cycles following the conversion to VRDS, the unit gradually increased the fraction of VR in its feed until 100 percent VR was processed over the entire run.

FEED PROCESSING CAPABILITY

Handling Impurities

In addition to the high concentrations of impurities that have already been discussed (sulfur, nitrogen, carbon residue, nickel, and vanadium), residues also contain high concentrations of particles such as iron sulfide scales and reservoir mud. If fed directly to a fixed-bed RDS/VRDS Hydrotreater, these particles would be filtered out by the small catalyst pellets and would form a crust. This crust would cause the pressure drop across the catalyst bed to increase dramatically, disturb the even distribution of oil and gas in the reactor, and eventually force a plant shutdown because of excessive pressure drop.

The first line of defense against particles in an RDS/VRDS Hydrotreater is the feed filter. These filters have small openings, commonly 25 microns, which allow the filtered oil to pass but retain the larger particulates. When the pressure drop across the filters

Downloaded from Digital Engineering Library @ McGraw-Hill (www.digitalengineeringlibrary.com)
Copyright © 2004 The McGraw-Hill Companies. All rights reserved.
Any use is subject to the Terms of Use as given at the website.

CHEVRON LUMMUS GLOBAL RDS/VRDS HYDROTREATING—TRANSPORTATION FUELS FROM THE BOTTOM OF THE BARREL

becomes excessive, they are automatically removed from service and briefly backwashed with oil. The particles that the feed filters remove would cause a very severe increase in pressure drop across the reactors, and therefore feed filtration is required for all residuum hydrotreaters. Even so, small particles pass on to the catalyst beds.

Some of the particles that pass through the feed filters are small enough to pass through the catalyst in the reactors as well. These particles do not affect the operation of the RDS/VRDS Hydrotreater. However, some particles are small enough to pass through the feed filters, but large enough to be trapped by the catalyst beds. These particles fill up the spaces between the catalyst and lead to increasing reactor pressure drop. This increased pressure drop is especially severe when the particles are all removed at one point in the reactor system. A large pressure drop increase can cause the refiner to decrease the feed rate or shut down the plant before the catalytic activity of the catalyst has been expended.

In addition to particles, high-reactivity metals such as iron can cause considerable operating difficulty for a fixed-bed residuum hydrotreater. Oil-soluble iron is highly reactive and is easily removed right on the outside of very active catalyst pellets. The removed iron quickly fills up the area between the catalyst pellets and leads to pressure drop increase. Oil-soluble calcium is also present in some crudes and can cause pressure drop increases and catalyst poisoning.

Catalyst Grading to Prevent Pressure Drop Increase

In the early development of residuum hydroprocessing, the high levels of insoluble and soluble iron in some California crudes caused Chevron to develop top bed grading technology[10] to minimize problems associated with these metals. Chevron was the first company to use a catalyst grading system in a commercial hydrotreater, in 1965. Special calcium removal catalysts have been applied in a VRDS Hydrotreater where the feed contained more than 50 wt ppm calcium. Effective catalyst grading combines physical grading of the catalyst by size and shape and grading of the catalyst by activity.

The goal of physical grading is to filter out particles in the grading catalyst that would otherwise plug the top of the smaller active catalyst pellets. By carefully changing the sizes and shapes of the physical grading catalyst, one can remove particles over several layers and therefore reduce their tendency to cause the pressure drop to increase.

Grading catalyst by activity means to gradually increase the surface activity of the catalyst down the reactor system. The oil is then exposed first to catalyst with very low activity that forces the reactive metals (iron and calcium, for example) to penetrate into the catalyst. There the removed metals do not fill up the space between pellets and pressure drop increase is avoided. The catalyst activity is increased in subsequent layers until all of the reactive metals have been removed.

Catalyst grading for preventing pressure drop increase cannot be accurately simulated on a small (pilot plant) scale because the flow regimes are much different. Extensive refinery experience forms the basis for the catalyst grading techniques used by CLG and ART. This experience includes data from a commercial unit feeding deasphalted oil that contained particulate and soluble iron, as well as very reactive nickel and vanadium. Proper catalyst grading techniques allow RDS/VRDS Hydrotreaters to run until catalyst activity is used up rather than shut down prematurely due to excessive pressure drop.

Feed Flexibility

Many types of feeds have been processed in RDS/VRDS Hydrotreaters. Successful processing of VR feeds as viscous as 6000 centistokes at 100°C have been commercially demonstrated.[6] Feeds containing up to 500 wt ppm Ni+V have also been commercially processed[11] in a fixed-bed RDS Hydrotreater.

Downloaded from Digital Engineering Library @ McGraw-Hill (www.digitalengineeringlibrary.com)
Copyright © 2004 The McGraw-Hill Companies. All rights reserved.
Any use is subject to the Terms of Use as given at the website.

CHEVRON LUMMUS GLOBAL RDS/VRDS HYDROTREATING—TRANSPORTATION FUELS FROM THE BOTTOM OF THE BARREL

Chevron catalyst systems can tolerate average feed metals over 200 wt ppm Ni+V while maintaining a 1-year run length. Feeds with considerably higher than 200 wt ppm Ni+V can be processed with at least a 1-year run length before catalyst replacement is required if the feed is pretreated in an On-Stream Catalyst Replacement reactor. By lowering the metals in the feed to processable levels, OCR increases the refiner's flexibility to run less expensive high-metal feeds (see Chap. 10.1).

COMMERCIAL APPLICATION

The use of residuum hydrotreatment to produce LSFO for power plants still continues as countries adopt stricter environmental regulations. More commonly, however, the refiner wishes to reduce fuel oil yield and have the flexibility to prepare feedstock for a downstream conversion unit.

Figure 8.1.7 shows a simple scheme for converting residuum to motor gasoline (mogas) using an RFCC. In this scheme, the RDS Hydrotreater significantly upgrades the RFCC feed. Pretreating the residuum feed increases its hydrogen content and reduces its impurities. For many crudes this upgrade is necessary for the RFCC to be operable. For other crudes, whose AR could be fed directly to the RFCC, RDS Hydrotreating improves the economics of the conversion project and increases the yield of market-ready light products.

In some residuum upgrading projects, middle distillates are more desirable products than mogas. In these projects, CLG's Isocracking process is the preferred processing route to produce high-quality middle distillates from the VGO. Figure 8.1.8 shows a scheme in which the AR is sent to a vacuum tower to prepare VGO feed for an Isocracker. The remaining VR is then sent to a VRDS Hydrotreater to be pretreated for an RFCC. High-severity VRDS Hydrotreating has been shown[12] to prepare suitable feedstock for an RFCC. This scheme provides the optimal usage of hydrogen for upgrading the residuum. The hydrogen required by the Isocracker is just the amount necessary to convert the VGO to middle distillates. The hydrogen required by the VRDS Hydrotreater is just enough to improve the volatility and hydrogen content of the VR to be satisfactory for RFCC feed.

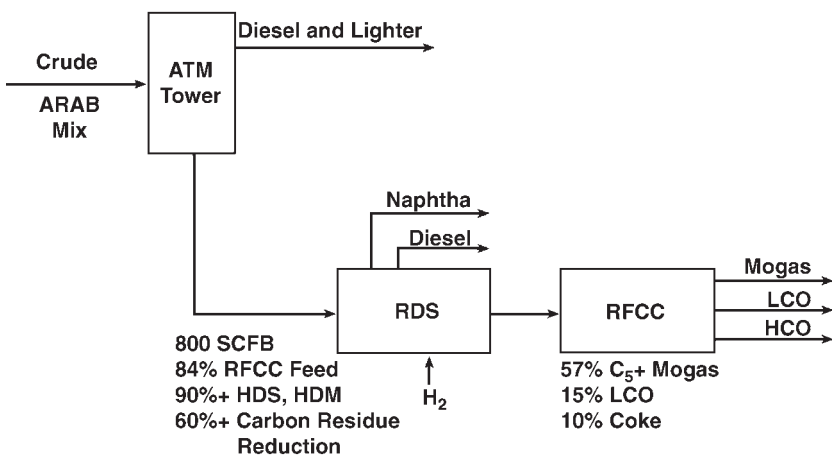

FIGURE 8.1.7 Simple residuum conversion. A low cost project to convert residuum into maximum mogas.

Downloaded from Digital Engineering Library @ McGraw-Hill (www.digitalengineeringlibrary.com)
Copyright © 2004 The McGraw-Hill Companies. All rights reserved.
Any use is subject to the Terms of Use as given at the website.

CHEVRON LUMMUS GLOBAL RDS/VRDS HYDROTREATING—TRANSPORTATION FUELS FROM THE BOTTOM OF THE BARREL

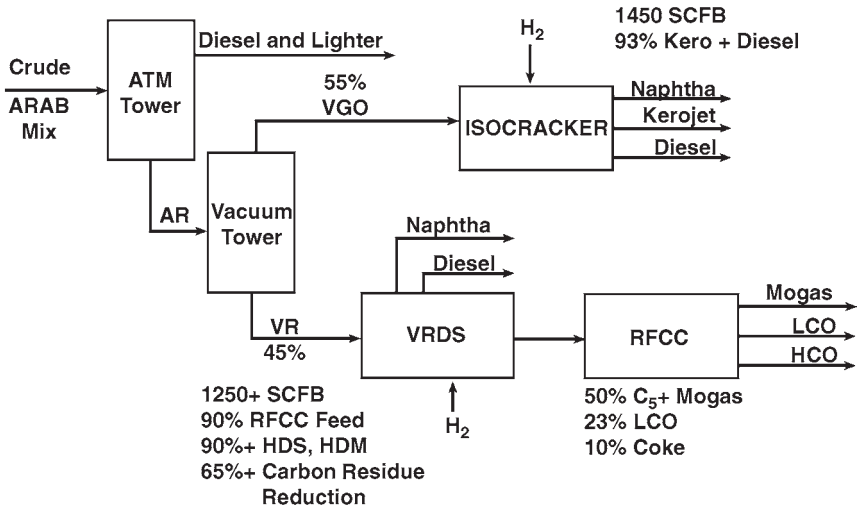

FIGURE 8.1.8 Residuum conversion to middle distillate and mogas. Converting the RDS to accept vacuum residuum and adding an Isocracker enables refiners to produce market-ready middle distillates.

Many residue upgrading projects need to vary the relative production of gasoline and middle distillates with market demands. Figure 8.1.9 shows a scheme where the vacuum column cut point is varied between 425°C (797°F) to produce maximum mogas and 565°C (1049°F) to produce maximum middle distillates. Again, the addition of hydrogen is adjusted to just satisfy the hydrogen upgrading requirements of the product slate.

Finally, some projects need to be installed in phases. Figure 8.1.10 shows the hypothetical transition from a simple upgrading project to a complete and flexible upgrading project in four phases. Phase 1 consists of an RDS Hydrotreater to reduce the quantity and improve the quality of fuel oil produced. Phase 2 sees the installation of an RFCC to completely destroy the residuum. Phase 3 further extends the project by adding a vacuum column with a variable VGO cut point and an Isocracker to make high-quality middle distillates from the VGO. The RDS Hydrotreater processes either AR that has a higher starting cut point than its original design or pure VR (in the case that all of the VGO is routed to the Isocracker). It is important that the residuum hydrotreater in phase 1 be designed with the flexibility to process either AR or VR. Finally, phase 4 adds an OCR onto the RDS/VRDS Hydrotreater to provide greater flexibility to process inexpensive, high-metal crudes.

Example Yields and Product Properties

Table 8.1.5 shows the yields and product properties from a sample RDS Hydrotreater preparing high-quality RFCC feed (0.4 wt % sulfur) from Arabian Heavy AR (650°F+)

Investment and Utility Consumption Information

Table 8.1.6 shows the estimated investment costs for the RDS Hydrotreater whose yields and product properties are given in Table 8.1.5. These estimated costs are based on similar projects executed by Chevron in its refineries.

Downloaded from Digital Engineering Library @ McGraw-Hill (www.digitalengineeringlibrary.com)
Copyright © 2004 The McGraw-Hill Companies. All rights reserved.
Any use is subject to the Terms of Use as given at the website.

CHEVRON LUMMUS GLOBAL RDS/VRDS HYDROTREATING—TRANSPORTATION FUELS FROM THE BOTTOM OF THE BARREL

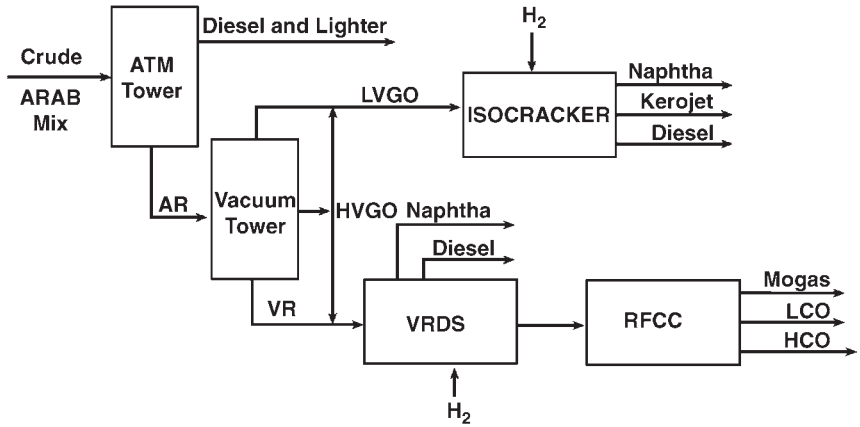

FIGURE 8.1.9 Middle distillate to mogas flexibility with VRDS/RFCC. Refiners can respond to changing demands for mogas and middle distillates by changing VGO cut point in the vacuum tower.

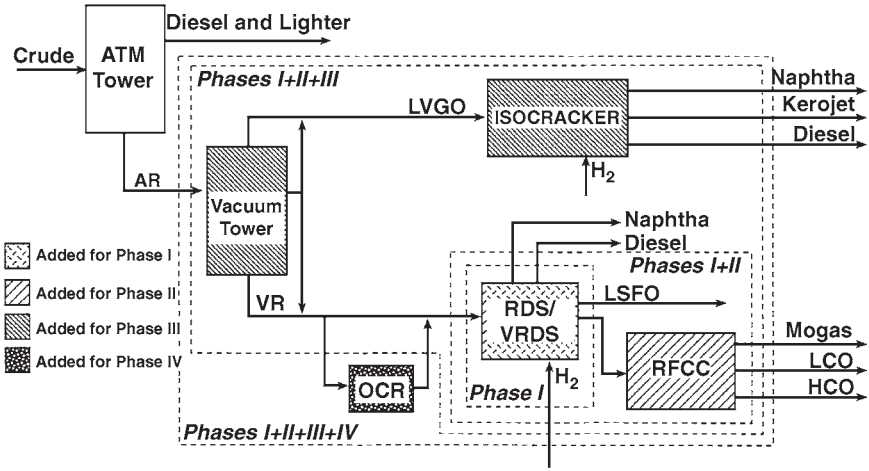

FIGURE 8.1.10 Phased implementation of a residuum conversion project. Chevron's hydroprocessing technologies enable refiners to phase in residuum conversion projects as market demands change.

Table 8.1.7 summarizes typical running costs (per stream day and per barrel processed) for the 70,000-BPD RDS Hydrotreater whose yield and product properties are shown in Table 8.1.5. Utility estimates are based on Chevron's operating experience. The costs in Table 8.1.7 include no capital charges, either for the RDS Hydrotreater or a hydrogen plant (in the event one is required).

Table 8.1.8 summarizes typical total processing costs for the same 70,000 BPD RDS Hydrotreater. This estimate includes charges for capital for the RDS Hydrotreater at 25 percent of the estimated on-plot and off-plot charges. The charge of $2.50 per thousand cubic feet of hydrogen includes the capital charges for a new hydrogen plant as well as the operating and raw material costs of producing hydrogen.

Downloaded from Digital Engineering Library @ McGraw-Hill (www.digitalengineeringlibrary.com)
Copyright © 2004 The McGraw-Hill Companies. All rights reserved.
Any use is subject to the Terms of Use as given at the website.

TABLE 8.1.5 Sample RDS Hydrotreater Yields—RFCC Feed Preparation

	Feed		Products					
	Feedstock	H_2	H_2S	NH_3	C_1-C_4	C_5-280°F	280–650°F	650°F+
BPSD	70,000					1346	10,145	61,058
wt % of feed	100.00	1.43 (940 SCFB)	4.28	0.22	0.23	1.38	12.51	82.81
LV % of feed	100.00					1.92	14.49	87.23
Density, °API	11.8					68.2	34.5	19.4
Sulfur, wt %	4.37					0.004	0.034	0.40
Nitrogen, wt %	0.30					0.003	0.016	0.14
Carbon residue, wt %	13.6							5.5
Viscosity, cSt at 50°C	3240							160
Nickel, wt ppm	34							5
Vanadium, wt ppm	97							5

Feed is Arabian Heavy 650°F+ AR

Note: BPSD = barrels per stream day.

Downloaded from Digital Engineering Library @ McGraw-Hill (www.digitalengineeringlibrary.com)
Copyright © 2004 The McGraw-Hill Companies. All rights reserved.
Any use is subject to the Terms of Use as given at the website.

CHEVRON LUMMUS GLOBAL RDS/VRDS HYDROTREATING—TRANSPORTATION FUELS FROM THE BOTTOM OF THE BARREL

TABLE 8.1.6 Estimated Investment Summary for RDS Hydrotreater to Prepare RFCC Feed

Feed Rate, BPSD	70,000
Run length, days	335
Operating factor	0.92
On-plot investment, million $U.S.:	
Major materials	107.2
Reactors	73.3
Other reactor loop	22.5
Fractionation	4.8
Makeup compression	6.6
Installation cost	79.3
Engineering cost	17.9
Indirect cost	29.8
Total on-plot cost	234.2
Total off-plot cost (30% of on-plot), million $U.S.	70.3
Catalyst cost per charge, million $U.S.	8.8

Basis: second quarter 1995, U.S. Gulf Coast.

THE FUTURE

Interest in RDS/VRDS Hydrotreating will continue to expand as environmental restrictions tighten. This is particularly true in developing countries where energy requirements are growing rapidly and shifting away from fuel oil to transportation fuels.

Continuously improving catalysts and process technology have enabled RDS/VRDS Hydrotreating to adapt to refiners' changing requirements. Future demands will be placed on RDS/VRDS Hydrotreating to yield products with lower levels of impurities in the face of increasing impurities in feedstocks. New technologies, such as OCR, are expected to make major contributions to these residuum hydrotreaters of the future.

REFERENCES

1. H. A. Frumkin and G. D. Gould, "Isomax Takes Sulfur Out of Fuel Oil," AIChE Meeting, New Orleans, March 16–20, 1969.
2. A. G. Bridge, E. M. Reed, P. W. Tamm, and D. R. Cash, "Chevron Isomax Processes Desulfurize Arabian Heavy Residua," 74th National AIChE Meeting, New Orleans, March 11–15, 1973.
3. A. G. Bridge, G. D. Gould, and J. F. Berkman, "Residua Processes Proven," *Oil and Gas Journal,* **85,** January 19, 1981.
4. K. Saito, S. Shinuzym, F. Fukui, and H. Hashimoto, "Experience in Operating High Conversion Residual HDS Process," AIChE Meeting, San Francisco, November 1984.
5. J. B. Rush and P. V. Steed, "Refinery Experience With Hydroprocessing Resid for FCC Feed," 49th Midyear Refinery Meeting, API, New Orleans, May 16, 1984.
6. B. E. Reynolds, D. V. Law, and J. R. Wilson, "Chevron's Pascagoula Residuum Hydrotreater Demonstrates Versatility," NPRA Annual Meeting, San Antonio, March 24–26, 1985.
7. J. G. Speight, *The Chemistry and Technology of Petroleum,* 2d ed., Marcel Dekker, New York, 1991.
8. H. Kanazawa and B. E. Reynolds, "NPRC's Success With Chevron VRDS," NPRA Annual Meeting, San Antonio, March 25–27, 1984.

Downloaded from Digital Engineering Library @ McGraw-Hill (www.digitalengineeringlibrary.com)
Copyright © 2004 The McGraw-Hill Companies. All rights reserved.
Any use is subject to the Terms of Use as given at the website.

TABLE 8.1.7 Utility and Running Cost Summary for 70,000-BPD RDS Hydrotreater to Prepare RFCC Feed*

Item	Unit cost†	Rate‡	$/Stream day	$/Bbl FF
Utilities:				
Fuel	$20.00/EFO-bbl (6 million Btu)	272 EFO-BPD	5,440	0.078
Power	$0.05/kWh	27,000 kW	32,400	0.463
400 lb/in^2 gage steam	$2.00/klb	−22 klb/h	(1,056)	(0.015)
150 lb/in^2 gage steam	$3.25/klb	116 klb/h	9,048	0.129
Cooling water	$0.05/kgal	8,200 gal/min	590	0.008
Process injection water	$5.40/kgal	66 gal/min	513	0.007
Boiler feed water	$6.30/kgal	85 gal/min	771	0.011
Condensate	$5.40/kgal	(176) gal/min	(1,369)	(0.020)
Total Utilities			46,337	0.661
Hydrogen	$0.85/kSCF	71.7 million SCFD	60,945	0.871
Catalyst	$8.80 million/year		26,206	0.374
Operating labor	$0.20 million/year/shift	2 shift positions	1,191	0.017
Supervision+support labor		(50% of operating labor)	596	0.009
Maintenance	$6.09 million/year	2% of (on plot+off plot)	18,135	0.259
Taxes+insurance	$3.13 million/year	1% of (on plot+off plot+catalyst)	9,330	0.133
Total running cost			162,740	2.324

*Feed is Arabian Heavy 650°F+ AR.

†Typical costs based on Chevron's operating experience.

‡Positive number is consumption or cost, negative (in parentheses) is production or credit.

Note: EFO = equivalent fuel oil; SCF = standard cubic feet; SCFD = standard cubic feet per day; FF = fresh feed.

Downloaded from Digital Engineering Library @ McGraw-Hill (www.digitalengineeringlibrary.com)
Copyright © 2004 The McGraw-Hill Companies. All rights reserved.
Any use is subject to the Terms of Use as given at the website.

TABLE 8.1.8 Utility and Total Cost Summary for 70,000-BPD RDS Hydrotreater to Prepare RFCC Feed*

Fuel	Unit cost†	Rate‡	$/Stream day	$/bbl FF
Utilities:				
Fuel	$20.00/EFO-bbl (6 million Btu)	272 EFO-BPD	5,440	0.078
Power	$0.05/kWh	27,000 kW	32,400	0.463
400 lb/in^2 gage steam	$2.00/klb	− 22 klb/h	(1,056)	(0.015)
150 lb/in^2 gage steam	$3.25/klb	116 klb/h	9,048	0.129
Cooling water	$0.05/kgal	8,200 gal/min	590	0.008
Process injection water	$5.40/kgal	66 gal/min	513	0.007
Boiler feed water	$6.30/kgal	85 gal/min	771	0.011
Condensate	$5.40/kgal	(176) gal/min	(1,369)	(0.020)
Total Utilities			46,337	0.661
Hydrogen	$2.50/kSCF	71.7 million SCFD	179,250	2.561
Catalyst	$8.80 million/year		26,206	0.374
Operating labor	$0.20 million/year/shift	2 shift positions	1,191	0.017
Supervision+support labor		(50% of operating labor)	596	0.009
Maintenance	$6.09 million/year	2% of (on plot+off plot)	18,135	0.259
Taxes+insurance	$3.13 million/year	1% of (on plot+off plot+catalyst)	9,330	0.133
Capital charge	$76.12 million/year	25% of (on plot+off plot)	226,691	3.238
Total processing cost			507,736	7.252

*Feed is Arabian Heavy 650°F+ AR.

†Typical costs based on Chevron's operating experience.

‡Positive number is consumption or cost, negative (in parentheses) is production or credit.

Downloaded from Digital Engineering Library @ McGraw-Hill (www.digitalengineeringlibrary.com)
Copyright © 2004 The McGraw-Hill Companies. All rights reserved.
Any use is subject to the Terms of Use as given at the website.

CHEVRON LUMMUS GLOBAL RDS/VRDS HYDROTREATING—TRANSPORTATION FUELS FROM THE BOTTOM OF THE BARREL

9. N. E. Kaparakos, J. S. Lasher, S. Sato, and N. Seno, "Nippon Mining Company Upgrades Vacuum Tower Bottoms in Gulf Resid HDS Unit," Japan Petroleum Institute Petroleum Refining Conf., Tokyo, October 1984.
10. C. Hung, H. C. Olbrich, R. L. Howell, and J. V. Heyse, "Chevron's New HDM Catalyst System for a Deasphalted Oil Hydrocracker," AIChE 1986 Spring National Meeting, April 10, 1986, paper no. 12b.
11. B. E. Reynolds, D. R. Johnson, J. S. Lasher, and C. Hung, "Heavy Oil Upgrading for the Future: The New Chevron Hydrotreating Process Increases Flexibility," NPRA Annual Meeting, San Francisco, March 19–21, 1989.
12. B. E. Reynolds and M. A. Silverman, "VRDS/RFCC Provides Efficient Conversion of Vacuum Bottoms Into Gasoline," Japan Petroleum Institute Petroleum Refining Conf., Tokyo, October 18–19, 1990.
13. B. E. Reynolds and D. N. Brossard, "RDS/VRDS Hydrotreating Broadens Application of RFCC," *ATI Quarterly*, Winter 1995/1996.
14. B. E. Reynolds, J. L. Rogers, and R.A. Broussard, "Evolution of Resid Conversion Options," NPRA Annual Meeting, San Antonio, March 16–18, 1997.
15. B. E. Reynolds, D. R. Cash, and M. J. Armstrong, "VRDS for Conversion to Middle Distillate," NPRA Annual Meeting, San Francisco, March 15–17, 1998.

Downloaded from Digital Engineering Library @ McGraw-Hill (www.digitalengineeringlibrary.com)
Copyright © 2004 The McGraw-Hill Companies. All rights reserved.
Any use is subject to the Terms of Use as given at the website.

Source: HANDBOOK OF PETROLEUM REFINING PROCESSES

CHAPTER 8.2
SELECTIVE HYDROGENATION PROCESSES

Beth McCulloch, Charles Luebke, and Jill Meister
UOP LLC
Des Plaines, Illinois

The presence of dienes and acetylenes in light olefinic streams is often undesirable, and these reactive contaminants must be removed from the olefinic streams without affecting the nature or concentration of the olefins. The dienes and acetylenes are typically removed by selective hydrogenation to the corresponding monoolefins. Light olefin streams are produced by steam cracking, dehydrogenation of C_3/C_4 paraffins, or fluid catalytic cracking (FCC). There are a number of processes that selectively remove reactive components such as acetylenes or dienes from olefinic streams.[1–5]

INTRODUCTION

Hydrogenation of dienes and acetylenic compounds can be accomplished selectively in the presence of monoolefins by using mild hydrogenation conditions. Chemische Werke Hüls developed the concept of selective hydrogenation in 1963. The first Hüls Selective Hydrogenation Process (SHP) was commercialized in 1980. The unit processed 160 kMTA of C_4 feed derived from a steam cracking unit. The SHP unit is applicable to all C_3–C_5 feedstocks including sulfur-containing feeds from FCC units. The selectivity of the hydrogenation reaction is dependent on the nature of the catalyst and the operating conditions. Hydrogenation is carried out at mild conditions with a slight stoichiometric excess of hydrogen. The Hüls SHP unit is licensed by UOP for the selective hydrogenation of butadiene to butenes, for propadiene and methylacetylene to propene, and for pentadienes to pentenes. UOP also offers the KLP process to selectively remove acetylenes from crude butadiene feedstocks.

Downloaded from Digital Engineering Library @ McGraw-Hill (www.digitalengineeringlibrary.com)
Copyright © 2004 The McGraw-Hill Companies. All rights reserved.
Any use is subject to the Terms of Use as given at the website.

THE KLP PROCESS

1,3-Butadiene is an important petrochemical intermediate recovered from the C_4 fraction of a naphtha steam cracking unit. The C_4 cut from a steam cracking unit contains up to 60 percent butadiene and also small amounts of C_4 acetylenes that need to be separated from the main butadiene product. Acetylenic compounds, such as vinyl acetylene and ethyl acetylene, can be selectively removed using the KLP process prior to butadiene extraction.[6,7] The KLP process is used to convert essentially 100 percent of the *alpha*-acetylenes to monoolefins and butadiene. The KLP process is highly selective, and there is no yield loss of butadiene; in fact, there may be a slight yield gain. With acetylenes no longer present, the extraction of butadiene can be accomplished in a single-stage unit. The KLP process can be readily integrated into existing extraction units and allows for a capacity increase or debottlenecking of the existing extraction unit. A process flow diagram of the KLP process integrated with a butadiene extraction unit is shown in Fig. 8.2.1. The extracted butadiene is very high-purity, with acetylene levels typically less than 10 ppm. The raffinate I stream still contains low levels of butadiene that may be removed by the SHP unit.

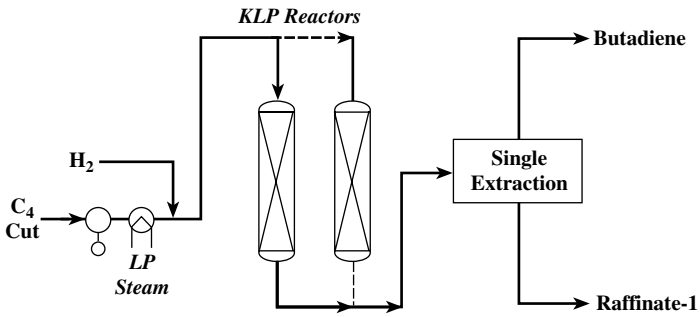

FIGURE 8.2.1 The KLP process.

THE SHP UNIT

The removal of butadiene from a C_4 olefin-rich stream can be readily accomplished using the SHP unit with a noble or non-noble-metal catalyst system. The process has been optimized to minimize losses of 1-butene through either hydrogenation or isomerization and to achieve levels of residual butadiene to as low as 10 ppm.

Hüls has successfully developed two modes of operation using a non-noble-metal or a noble metal catalyst depending on the processing objectives. In the first mode of operation, the dienes and acetylenes are selectively hydrogenated, and the *n*-butene isomer concentration moves toward the equilibrium concentration. At the low temperatures used in the SHP unit, the 2-butene is thermodynamically favored. This mode of operation is desirable for preparation of HF catalyzed alkylation feedstocks. The butene isomerization that occurs over the SHP catalyst will increase the ratio of 2-butene to 1-butene typically from about 2 to 8. The increased 2-butene content will increase alkylate octane by up to two research numbers in HF catalyzed alkylation units. In the second mode of operation the isomerization activity is suppressed while hydrogenation activity is maintained. This mode of operation is desirable for the production of high-purity comonomer-grade 1-

Downloaded from Digital Engineering Library @ McGraw-Hill (www.digitalengineeringlibrary.com)
Copyright © 2004 The McGraw-Hill Companies. All rights reserved.
Any use is subject to the Terms of Use as given at the website.

SELECTIVE HYDROGENATION PROCESSES

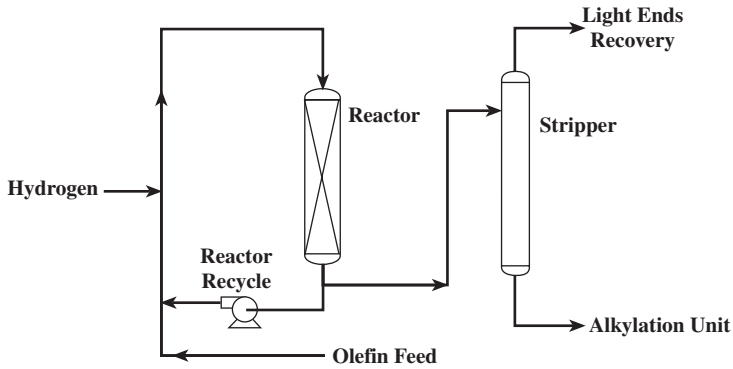

FIGURE 8.2.2 Hüls Selective Hydrogenation Process flow diagram.

butene. In addition, reducing the diene content in HF and H_2SO_4 catalyzed alkylation units results in lower acid consumption and increased alkylate yield.

A flow diagram for the SHP unit is shown in Fig. 8.2.2. The feed is combined with hydrogen at near stoichiometric ratios to the diene and acetylene content of the feed. Hydrogenation then takes place in a fixed-bed reactor. In cases where the diene concentration of the feed is high, a portion of the reactor effluent is recycled. The hydrogen leaving the reactor is at a very low concentration and does not require removal unless a downstream process is sensitive to noncondensable gases. A Hüls SHP unit is easy to operate, and minimal utilities are required, especially if the feed and hydrogen are both available at suitable pressure.

Table 8.2.1 illustrates the two different modes of operation. The same feedstock is used with the same hydrogen addition rate and space velocity. In the first mode, good hydrogenation is achieved with a high level of isomerization from 1-butene to 2-butene. In the second mode, the SHP unit is optimized for the production of 1-butene. Essentially complete removal of dienes and acetylenes is achieved in either case, and there is no loss of *n*-butenes.

In refineries, light olefin streams are produced by FCC units. Removal of the acetylenes and dienes from C_3–C_5 streams is readily achieved with the SHP unit. For example, polymer-grade propylene requires less than 5 wt ppm of dienes and acetylenes to meet specifications.

The C_4 and C_5 steams derived from an FCC unit typically contain low levels of sulfur. For sulfur-containing feedstocks in refinery applications, a non-noble-metal catalyst was developed that is robust and sulfur-tolerant. Catalyst life based on commercial experience is expected to be 4 years or more provided the feedstocks meet design specifications.

The C_5 olefin streams can be used as alkylation process feed or as feedstock for the production of tertiary amyl methyl ether (TAME). Typically, the feedstock to a TAME Ethermax unit requires the reduction of dienes in the C_5 olefin stream. In addition, 3-methyl-1-butene can be isomerized in the SHP unit to 2-methyl-1-butene and 2-methyl-2-butene, which react to form TAME. This can increase the TAME yield by up to 8 wt %.

TABLE 8.2.1 Typical Modes of SHP Unit Operation

Component	Feed	Mode 1	Mode 2
1-Butene, wt %	14.6	4.2	14.7
2-Butene, wt %	23.4	33.9	23.4
1,3-Butadiene, wt ppm	4460	20	<1
Butyne, wt ppm	68	6	<1

Downloaded from Digital Engineering Library @ McGraw-Hill (www.digitalengineeringlibrary.com)
Copyright © 2004 The McGraw-Hill Companies. All rights reserved.
Any use is subject to the Terms of Use as given at the website.

SELECTIVE HYDROGENATION PROCESSES

THE HÜLS SHP-CB PROCESS

The Hüls SHP unit can also be modified to readily remove butadiene from feedstocks with high butadiene concentrations. For example, a crude C_4 stream from a steam cracking unit can contain up to 60 wt % butadiene and can be readily processed by the Hüls SHP-CB unit, where CB refers to concentrated butadiene. In the SHP-CB process, the use of multiple reactors together with a recycle stream reduces the butadiene concentration while controlling the exothermicity of the reaction. The SHP-CB process is operated at mild temperatures and moderate pressures. The product from the SHP-CB unit typically contains up to 10 wt ppm butadiene. The catalyst has a very high selectivity to monoolefins (99+ percent) and is designed to give a high yield of 1-butene.

The SHP-CB process can be used in the production of high-purity 1-butene. The product from the SHP-CB process can be sent to an MTBE Ethermax unit or UOP Indirect Alkylation (InAlk) Unit for the removal of isobutene. The MTBE or InAlk unit raffinate is then sent to the Hüls Butene-1 Separation Process for recovery of high-purity 1-butene. In a typical scheme, *n*-butane and 2-butene are removed in an initial column, and high-purity 1-butene is recovered as the bottoms product in a second column. The fractionation of the different C_4 components is difficult and requires a large number of stages. However, the use of UOP MD trays can provide significant cost savings in the fractionation section. The flow scheme for the production of 1-butene from a steam cracking unit feed is shown in Fig. 8.2.3.

COMMERCIAL EXPERIENCE

A total of nine KLP units have been licensed, and seven are in operation. Thirty-six SHP units and seven SHP-CB units have been licensed. Twenty-three of the SHP units are now on-stream, and three are under design or construction. Five of the SHP-CB units are now on-stream with an additional one under design or construction. Most of these units are designed for diene reduction to less than 5 wt ppm.

ECONOMICS AND OPERATING COSTS

The estimated erected cost of an SHP unit processing 200 kMTA (6373 BPD) FCC olefins with 1 percent dienes is $3.3 million U.S. (±50 percent). This capital estimate is for an inside battery-limits unit erected in the U.S. Gulf Coast, fourth quarter 2002.

The utility requirements for an SHP unit processing 200 kMTA (6373 BPD) are summarized in Table 8.2.2.

REFERENCES

1. J. P. Boitiaux, C. J. Cameron, J. Cosyns, F. Eschard, and P. Sarrazin, "Selective Hydrogenation Catalysts and Processes," Erdoel Kohle, Erdgas, *Petrochem.* **47**(4): 141–145 (1994).

2. Gary Gildert and Richard Barchas, "Selective Diolefin Hydrogenation," CDTECH, Pasadena, Tex., *Ber.-Dtsch. Wiss. Ges. Erdoel, Erdgas Kohle Tagungsber,* 9305: 59–66 (1993).

Downloaded from Digital Engineering Library @ McGraw-Hill (www.digitalengineeringlibrary.com)
Copyright © 2004 The McGraw-Hill Companies. All rights reserved.
Any use is subject to the Terms of Use as given at the website.

SELECTIVE HYDROGENATION PROCESSES

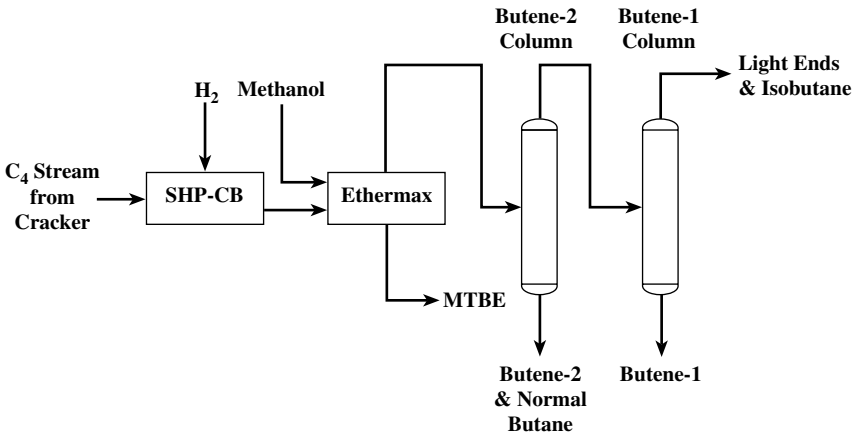

FIGURE 8.2.3 Production of 1-butene from crude C_4s.

TABLE 8.2.2 Operating Utility Requirements

Power	46 kWh	46 kWh
Medium-pressure steam (150 lb/in^2 gage sat.)	798 kg/h	1760 lb/h
Condensate	(798 kg/h)	(1760 lb/h)
Cooling water	51 m^3/h	223 gal/min

Note: Values in parentheses indicates net production.

3. H-M Allmann, Ch. Herlon, and P. Polanek, "Selective Hydrogenations and Purifications in the Steamcracker Downstream Treatment." BASF AG, Ludwigshafen, Germany. *Ber.-Dtsch. Wiss. Ges. Erdoel, Erdgas Kohle, Tagungsber* 9305: 1–29 (1993).

4. F. Nierlich and F. Obenaus, "Method for Selective Hydrogenation of Polyunsaturated Hydrocarbons in Olefin Mixtures." Huels A.-G., Marl, Fed. Rep. Ger. *Erdoel Kohle, Erdgas, Petrochem.* 39(2): 73–78 (1986).

5. B. V. Vora and C. P. Luebke, "Process Hydrogenates Unwanted Diolefins and Acetylenes," *Oil and Gas Journal,* Dec. 5, 1988, p. 5.

6. H. Abrevaya, B. V. Vora, and R. A. Lentz, "Improved Butadiene Technology for Naphtha Cracking," UOP, Des Plaines, Ill., USA. *Proceedings of Ethylene Producers Conference* 5: 631–636 (1996).

7. H. Abrevaya, B. V. Vora, E. H. Page, and M. J. Banach, "Selective Hydrogenation of C_4 Acetylenes by the KLP Process." UOP, Des Plaines, Ill., USA. (*Proceedings of the DGMK-Conference: C_4 Chemistry—Manufacture and Use of C_4 Hydrocarbons,* DGMK Tagungsber. 9705: 99–106 (1997).

Downloaded from Digital Engineering Library @ McGraw-Hill (www.digitalengineeringlibrary.com)
Copyright © 2004 The McGraw-Hill Companies. All rights reserved.
Any use is subject to the Terms of Use as given at the website.

Downloaded from Digital Engineering Library @ McGraw-Hill (www.digitalengineeringlibrary.com)
Copyright © 2004 The McGraw-Hill Companies. All rights reserved.
Any use is subject to the Terms of Use as given at the website.

Source: HANDBOOK OF PETROLEUM REFINING PROCESSES

CHAPTER 8.3
UOP UNIONFINING TECHNOLOGY

Peter Kokayeff
UOP LLC
Des Plaines, Illinois

INTRODUCTION

Hydrotreating is one of the most mature technologies found in the refinery, rivaling the history and longevity of the thermal process. In 1952, UOP and Union Oil Co. of California began licensing hydrotreating under the name of the Unifining process. The partnerships and the development of this technology have gone through a series of changes over the years, and in 1995 the acquisition of the Unocal Process Technology and Licensing group by UOP resulted in the merger of two premier hydroprocessing companies and the combination of their expertise under the UOP* Unionfining* banner.

Generally speaking, the hydrotreating process removes objectionable materials from petroleum distillates by selectively reacting these materials with hydrogen in a catalyst bed at elevated temperature. These objectionable materials include sulfur, nitrogen, olefins, and aromatics. Lighter materials such as naphtha are generally treated for subsequent processing in catalytic reforming units, and the heavier distillates, ranging from jet fuel to heavy vacuum gas oils, are treated to meet strict product-quality specifications or for use as feedstocks elsewhere in the refinery. Many of the product-quality specifications are driven by environmental regulations that are becoming more stringent each year. This push toward more environmentally friendly products is resulting in the addition of hydroprocessing units in refineries throughout the world.

PROCESS CHEMISTRY

The chemistry behind the hydrotreating process can be divided into a number of reaction categories: (hydro)desulfurization, (hydro)denitrification, saturation of olefins, and saturation of aromatics. For each of these reactions, hydrogen is used to improve the quality of the petroleum fraction.

*Trademark and/or service mark of UOP.

Downloaded from Digital Engineering Library @ McGraw-Hill (www.digitalengineeringlibrary.com)
Copyright © 2004 The McGraw-Hill Companies. All rights reserved.
Any use is subject to the Terms of Use as given at the website.

UOP UNIONFINING TECHNOLOGY

Desulfurization

Desulfurization is by far the most common of the hydrotreating reactions. Sulfur-containing hydrocarbons come in a number of forms, and the ability to remove sulfur from the different types of hydrocarbons varies from one type to the next. The degree to which sulfur can be removed from the hydrocarbon varies from near-complete desulfurization for light straight-run naphthas to 50 to 70 percent for heavier residual materials. Figure 8.3.1 lists several sulfur-containing compounds in order of the difficulty in removing the sulfur.

The reaction of thiophenol, which is at the top of the list in Fig. 8.3.1, proceeds quite rapidly; the reaction is shown schematically in Fig. 8.3.2. Multiring thiophene-type sulfurs are more difficult to treat because the ring structure, which is attached to the sulfur on two sides, must be broken. Figure 8.3.3 is a schematic representation of the reaction for the desulfurization of dibenzothiophene.

In each case, the desulfurization reaction results in the production of hydrogen sulfide (H_2S) in the reactor section of the plant. To complete the desulfurization reaction, the H_2S must be removed in downstream fractionation.

Denitrification

The nitrogen compounds that occur naturally in crude oils and that would normally be found in the feed to a hydrotreater can be classified into two categories: *basic* nitrogen,

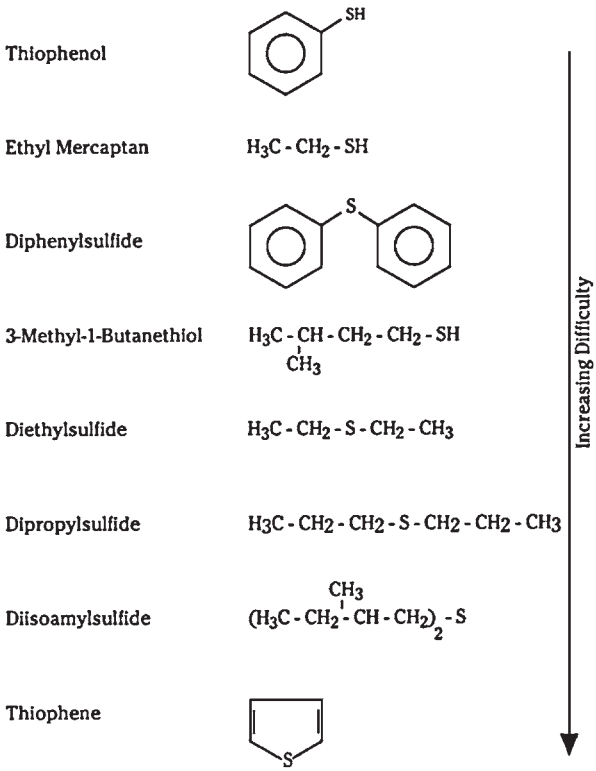

FIGURE 8.3.1 Relative desulfurization reactivities.

Downloaded from Digital Engineering Library @ McGraw-Hill (www.digitalengineeringlibrary.com)
Copyright © 2004 The McGraw-Hill Companies. All rights reserved.
Any use is subject to the Terms of Use as given at the website.

UOP UNIONFINING TECHNOLOGY

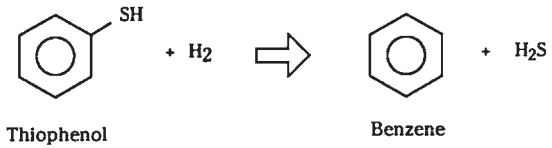

FIGURE 8.3.2 Desulfurization of thiophenol.

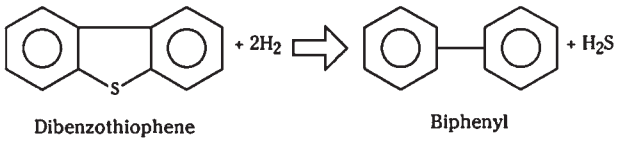

FIGURE 8.3.3 Desulfurization of dibenzothiophene.

which is generally associated with a six-member ring, and *neutral* nitrogen, which is generally associated with a five-member ring. Examples of these two types of nitrogen are shown in Fig. 8.3.4. The complexity of the nitrogen compounds makes denitrification more difficult than desulfurization.

The denitrification reaction first proceeds through a step that saturates the aromatic ring. This saturation is an equilibrium reaction and normally sets the rate at which the denitrification reaction can occur. Figure 8.3.5 is a schematic representation of a denitrification reaction. The combination of aromatic saturation followed by denitrification results in an increase in the amount of hydrogen required compared to desulfurization. This

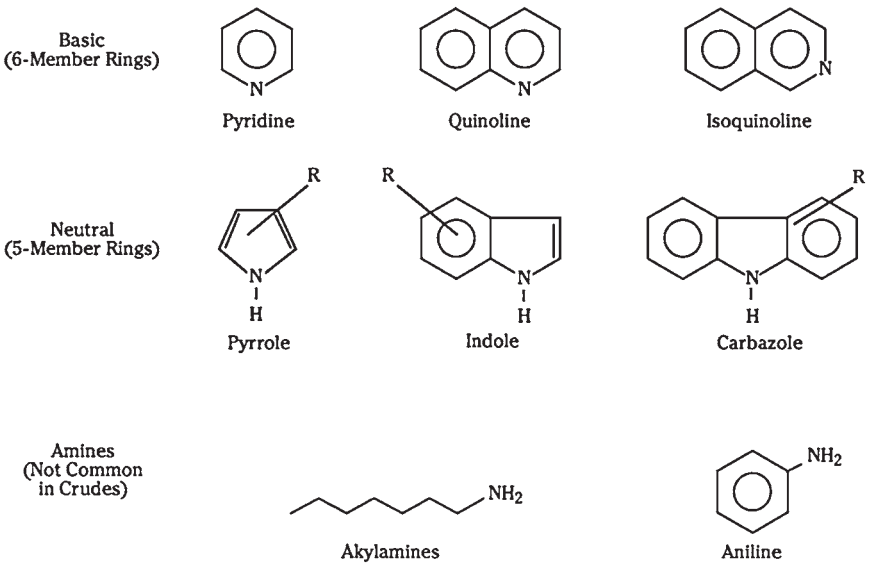

FIGURE 8.3.4 Types of nitrogen compounds.

Downloaded from Digital Engineering Library @ McGraw-Hill (www.digitalengineeringlibrary.com)
Copyright © 2004 The McGraw-Hill Companies. All rights reserved.
Any use is subject to the Terms of Use as given at the website.

UOP UNIONFINING TECHNOLOGY

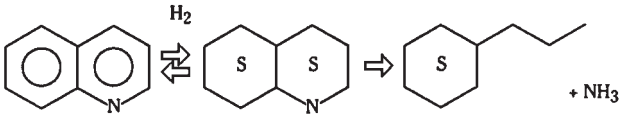

FIGURE 8.3.5 Denitrification of quinoline.

increased hydrogen consumption also translates to an increase in the amount of heat generated.

The denitrification reaction results in the generation of ammonia (NH_3). To complete the processing, this NH_3 must be removed in downstream fractionation.

Olefin Saturation

Although desulfurization is the most common of the reactions, olefin saturation also proceeds quite rapidly. As shown in Fig. 8.3.6, hydrogen is added to an olefin, and the corresponding saturated compound is the product. This reaction is quite fast and highly exothermic. If a significant quantity of olefins is present in the feed, the resulting heat release must be accounted for in the unit design. The ease with which this reaction takes place allows for operation at lower temperatures than the other hydrotreating reactions discussed in this section.

Aromatic Saturation

Aromatic saturation occurs according to the same principles as olefin saturation in that hydrogen is added to saturate the double bonds in the aromatic or benzene ring. The aromatic or benzene ring is a six-carbon atom ring that contains three double bonds (Fig. 8.3.7). Because this ring structure is quite prominent in many of the materials found in the

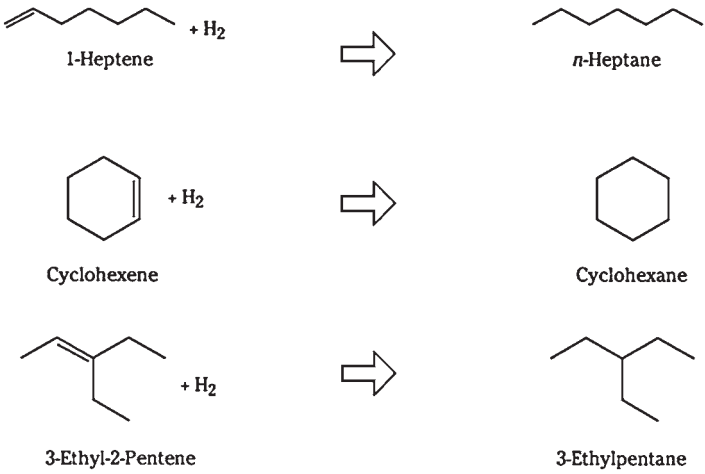

FIGURE 8.3.6 Typical olefin saturation reactions.

Downloaded from Digital Engineering Library @ McGraw-Hill (www.digitalengineeringlibrary.com)
Copyright © 2004 The McGraw-Hill Companies. All rights reserved.
Any use is subject to the Terms of Use as given at the website.

UOP UNIONFINING TECHNOLOGY

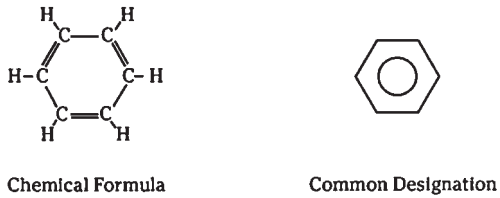

FIGURE 8.3.7 Benzene ring.

refinery, the symbol for this benzene ring is simplified and indicated as a hexagon with a circle inside.

Figure 8.3.8 schematically shows three typical aromatic saturation reactions. The S inside the ring represents a six-member carbon ring that has had all the double bonds saturated. Because these aromatic-saturation reactions are highly exothermic, maintaining a proper temperature profile in the reactor is important. As the catalyst deactivates, the temperatures are raised to maintain conversion until end-of-run (EOR) conditions are approached. In the case of aromatic saturation, EOR occurs when the equilibrium no longer favors aromatic saturation.

Metals Removal

In addition to the previously mentioned typical hydroprocessing functions, the Unionfining unit may be designed to remove low levels of metals from the feed. The metals to be removed include nickel and vanadium, which are native to the crude oil, as well

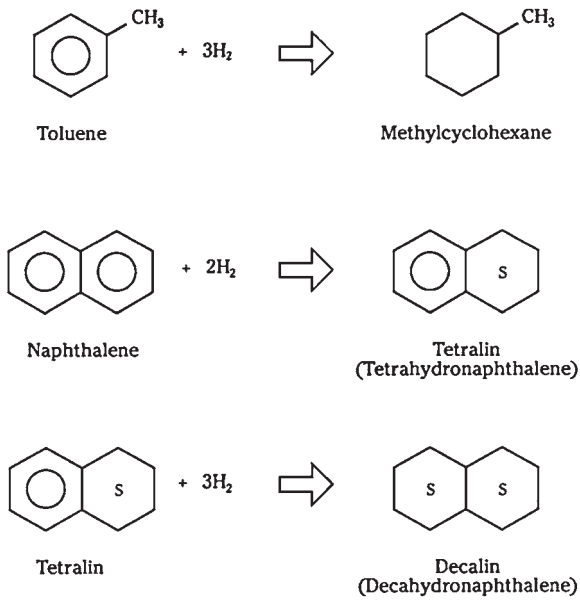

FIGURE 8.3.8 Typical aromatic saturation reactions.

Downloaded from Digital Engineering Library @ McGraw-Hill (www.digitalengineeringlibrary.com)
Copyright © 2004 The McGraw-Hill Companies. All rights reserved.
Any use is subject to the Terms of Use as given at the website.

UOP UNIONFINING TECHNOLOGY

as silicon and lead-containing materials that are added elsewhere in the refinery. These metals are poisons to downstream processing units and can pose environmental problems if they are contained in a fuel product that will eventually combust. In the past, refiners would operate their hydrotreating unit until the hydrotreating catalyst had no more capacity to absorb metals. In a hydrotreating unit, the reactor is loaded with a catalyst that is designed specifically to have a high capacity for metals removal if the feed metals are anticipated to be high.

CATALYST

The primary function of the catalyst used in the hydrotreating reaction is to change the rate of reactions. The suitability of a catalyst depends on a variety of factors related to the feed quality and processing objectives. The catalysts used in the UOP Unionfining processes are typically a high-surface-area base loaded with highly dispersed active metals.

For hydrodesulfurization operations, the preferred catalyst has been a cobalt molybdenum (Co/Mo) catalyst as it has a higher activity for desulfurization than nickel molybdenum (Ni/Mo) catalysts when the product sulfur level is high, that is, .~200 wt ppm S, meeting present-day environmental regulations. With much more stringent regulations slated to take effect within the next few years, a nickel molybdenum catalyst may be the optimal choice (see discussion of distillate unionfining for ULSD). Typical compositions of Co/Mo and Ni/Mo catalysts are shown in Table 8.3.1.

TABLE 8.3.1 Typical Composition of Unionfining Catalysts

Species	Range, wt %
CoO or NiO	1–6
MoO_3	6–25
Al_2O_3	Balance

In denitrification operations, a catalyst with a different hydrogen function is required to allow operation at normal temperatures. In these instances, the *nickel molybdenum* catalyst is more common. These catalysts are also good desulfurization catalysts; however, their hydrogen consumption could be higher because of their better denitrification activity.

Either of these catalysts provides adequate activity for the saturation of olefins. As previously mentioned, these reactions are fast and occur at temperatures lower than those required for desulfurization or denitrification.

For the saturation of aromatics, the selection of the proper catalyst is quite dependent on the processing objectives. In many cases, a nickel molybdenum catalyst provides the required level of aromatic saturation. In cases where the feed aromatics content is high or the product aromatics specification is low, UOP might suggest a catalyst that has some level of noble metal (such as platinum or palladium) to be used after the nickel molybdenum catalyst.

The metals-removal catalysts are designed specifically for the purpose of removing metals from the feed so that they do not affect the hydrotreating capability of the hydroprocessing catalyst. These catalysts typically have a different shape or pore structure or both

Downloaded from Digital Engineering Library @ McGraw-Hill (www.digitalengineeringlibrary.com)
Copyright © 2004 The McGraw-Hill Companies. All rights reserved.
Any use is subject to the Terms of Use as given at the website.

UOP UNIONFINING TECHNOLOGY

than the normal hydrotreating catalyst and are often designed to have some reduced level of desulfurization or denitrification activity.

PROCESS FLOW

The actual flow scheme of the UOP Unionfining process varies, depending on the application. Figure 8.3.9 provides a generic look at the flow scheme of a UOP Unionfining unit. The feed is exchanged with the reactor effluent, mixed with recycle hydrogen, and then heated to reaction temperature in a fired heater. The combined feed then flows through the reactor, which contains the catalyst that will accelerate the reaction. The reactor effluent is cooled in exchange with the feed and then in a series of coolers before being separated in a vapor-liquid separator. The vapor portion is recompressed, combined with fresh hydrogen, and returned to the reactor feed. The liquid portion is fed to a fractionator, where it is stripped of light ends, H_2S, and NH_3.

UNIONFINING APPLICATIONS

Generally speaking, the most common way to categorize hydrotreating applications is by feed type. This section provides general information on a limited number of Unionfining applications.

Naphtha Unionfining

The main use of the hydrotreating process in naphtha applications is in the preparation of feedstocks for the naphtha reforming unit. The reforming process requires low levels of sul-

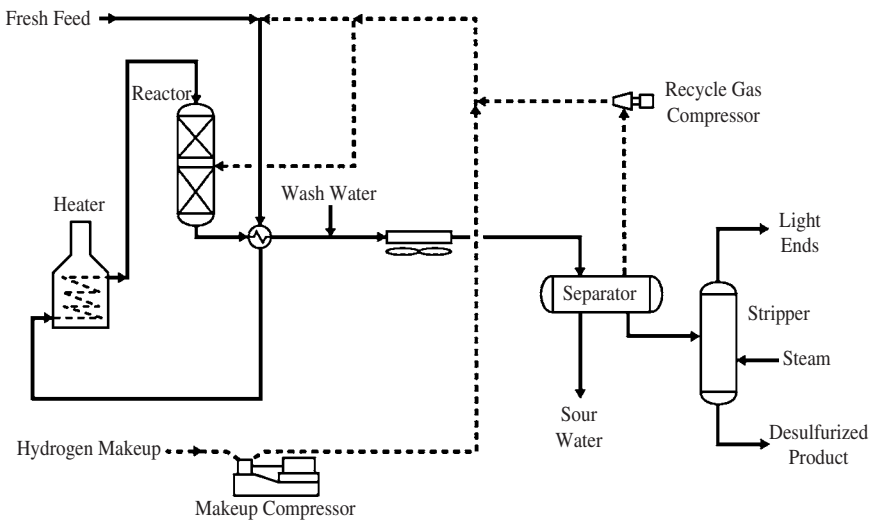

FIGURE 8.3.9 Typical Unionfining process flow.

Downloaded from Digital Engineering Library @ McGraw-Hill (www.digitalengineeringlibrary.com)
Copyright © 2004 The McGraw-Hill Companies. All rights reserved.
Any use is subject to the Terms of Use as given at the website.

UOP UNIONFINING TECHNOLOGY

fur, nitrogen, and metals in the feed. The Unionfining process reduces the sulfur and nitrogen to less than 0.5 wt ppm and the metals to nondetectable levels. For olefinic feeds, the Unionfining process is also used to stabilize the naphtha by completely saturating the olefins.

A comparison of the typical processing conditions of the various hydroprocessing operations indicates that naphtha feeds are typically the easiest to hydrotreat. Table 8.3.2 provides a list of typical operating conditions for the applications discussed in this section.

Distillate Unionfining

A distillate Unionfining process is typically used to improve the quality of kerosene, jet fuel, and diesel oils. While the usual objective is to effect a desired degree of desulfurization, process conditions, and catalyst choice can be adjusted to achieve a desired improvement in other properties such as cetane number (smoke point for jet fuels), stability, color, odor, or aromatics content of the product.

Distillate Unionfining for ULSD (Ultralow-Sulfur Diesel)

Recent environmental regulations will require a quantum leap in the reduction of sulfur in diesel fuels. While present regulations mandate a sulfur content of 500 wt ppm (U.S.) and 350 wt ppm (Europe), recently enacted legislation requires that the sulfur level be reduced to 15 wt ppm (by 2006 in the United States) and 10 wt ppm (by 2007 in Europe) before the end of the decade. To meet these more stringent regulations, new, more active catalysts are required as well as more severe operating conditions.

To achieve these very low levels of sulfur, the catalyst must be able to desulfurize the most difficult sulfur species—sterically hindered dibenzothiophenes. These compounds contain alkyl groups in the 4- and 6-positions, thus greatly restricting access to the sulfur atom. An illustration of the difficulty of desulfurizing these types of compounds is given in Fig. 8.3.10.

Since the difficult sulfur species are thiophenic, let's consider the relative reaction rates shown in Fig. 8.3.10, starting with thiophene which is assigned a desulfurization rate of 100. As the thiophene molecule becomes more complex and bulky with the addition of an aromatic ring, as in benzothiophene, the desulfurization rate drops to 60. With the addition of another aromatic ring, dibenzothiophene, the rate of desulfurization decreases by an order of magnitude to 5. Addition of substituents to the rings at positions far removed from the sulfur atom, as in 2,8-dimenthyldibenzothiophene, do not affect the rate of desulfurization. On the other hand, addition of substituents at positions adjacent to the sulfur atom, as in 4,6-dimenthyldibenzothiophene, greatly reduces the rate of desulfurization to a relative rate of 0.5. the difficulty in desulfurizing 4,6-dimethyldibenzothiophene (and com-

TABLE 8.3.2 Typical Hydrotreating Operating Conditions

Operating conditions	Naphtha	Middle distillate	Light gas oil*	Heavy gas oil
LHSV	1.0–5.0	1.0–4.0	0.7–1.5	0.75–2.0
H_2/HC ratio, N m^3/mm^3 (SCF/B)	50 (300)	135 (800)	255 (1500)	337 (2000)
H_2 partial pressure, kg/cm^2 (psia)	14 (200)	38 (400)	49 (700)	55 (800)
SOR temperature, °C (°F)	290 (555)	330 (625)	355 (670)	355 (670)

Note: LHSV = liquid hourly space velocity, N = standard temperature and pressure, SCFB = standard cubic feet per barrel.

*Conditions to desulfurize light gas oil to ULSD specifications (< 10 wt ppm sulfur).

Downloaded from Digital Engineering Library @ McGraw-Hill (www.digitalengineeringlibrary.com)
Copyright © 2004 The McGraw-Hill Companies. All rights reserved.
Any use is subject to the Terms of Use as given at the website.

UOP UNIONFINING TECHNOLOGY

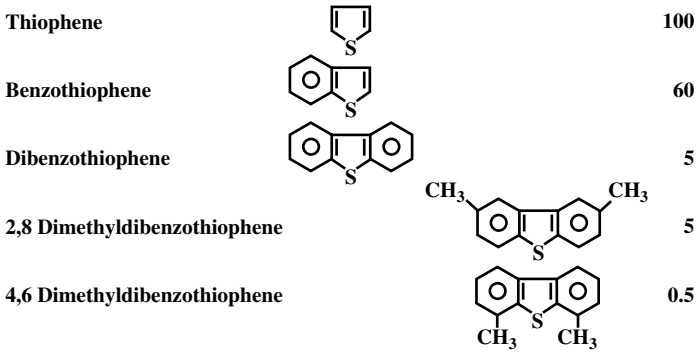

FIGURE 8.3.10 Relative reaction rates.

pounds of a similar structure with alkyl substituents adjacent to the sulfur atom) is due to the steric hindrance these substituents present to access of the sulfur atom to the active site of the catalyst. For the production of the ULSD, it is these most difficult sulfur species that must undergo desulfurization.

In addition to the difficulty of desulfurizing the sterically hindered dibenzothiophenes, the impact of a number of poisons for the desulfurization reaction must be considered. These include nitrogen and oxygen compounds. While the toxic effect of these poisons may have been neglected in the past, it must be taken into account for a successful design of a unit for ULSD production.

Based on fundamental mechanistic and kinetic studies, present theory suggests that in order to desulfurize these molecules, one of the aromatic rings must first undergo saturation. Since Ni/Mo catalysts have better saturation activity than Co/Mo catalysts, the former are preferred for deep desulfurization of distillates to ULSD specifications. The requirement to effect such a deep level of desulfurization will necessitate the application of much more severe process conditions for distillate Unionfining than were necessary in the past (Table 8.3.2).

Vacuum Gas Oil Unionfining

A vacuum gas oil (VGO) Unionfining process is typically designed to either upgrade the feed quality for further processing or improve the VGO quality so that it can be used as an environmentally friendly fuel oil. Typically, further processing of the VGO occurs in a fluid catalytic cracking (FCC) unit or in a hydrocracking unit.

As can be seen in Table 8.3.2, the conditions required to hydrotreat a VGO stream are more severe than those required to hydrotreat feedstocks with lower molecular weight. As a result, some low-level (10 to 30 percent) conversion can take place in a VGO Unionfining unit. This conversion requires that the product fractionation be designed to recover lighter products for use elsewhere in the refinery or for blending with the refinery product streams.

RCD Unionfining Process

The RCD Unionfining process for hydrotreating residual hydrocarbons is not discussed in this chapter; however, the principles involved are the same, but the processing conditions are more severe (Table 8.3.2).

Downloaded from Digital Engineering Library @ McGraw-Hill (www.digitalengineeringlibrary.com)
Copyright © 2004 The McGraw-Hill Companies. All rights reserved.
Any use is subject to the Terms of Use as given at the website.

UOP UNIONFINING TECHNOLOGY

INVESTMENT

The investment associated with the installation of a hydrotreating unit depends on the feed characteristics and the product specifications. Generally speaking, as the feed gets heavier or the individual product specifications are reduced, the processing requirements are increased. These more severe processing conditions can result in more pieces of equipment, larger equipment, and higher operating pressure, all of which increase the cost of the unit. The required capital investment for a hydrotreating unit can vary from $500 to $2000 U.S. per barrel per stream-day of capacity.

UOP HYDROPROCESSING EXPERIENCE

The Unionfining process is really a broad family of fixed-bed hydrotreating processes. Naphtha, distillate, VGO, and RCD. Unionfining units are in operation throughout the world. UOP's Unionfining experience is broken down by application in Fig. 8.3.11. More than 500 commercial units have been designed, and these units process literally hundreds of different feed streams.

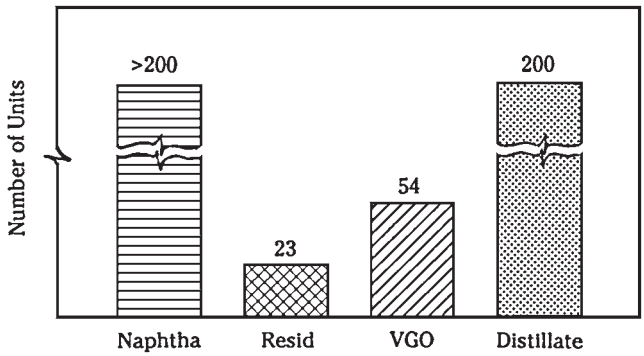

FIGURE 8.3.11 Unionfining experience.

BIBLIOGRAPHY

Ackelson, Donald B., David A. Lindsay, Robert E. Miller, and Milan Skripek: "Hydrotreating-Hydrocracking," Annual Conf. on International Refining and Petrochemicals, Singapore, May 9–10, 1994.

Baron, Ken, Robert E. Milner, Alice Tang, and Laurie Palmer: "Hydrotreating of Light Cycle Oil," Annual Meeting of National Petroleum Refiners Association, New Orleans, Mar. 22–24, 1992.

Bjorklund, Bradford, L., Timothy L. Heckie, Neil D. Howard, David A. Lindsay, and David J. Piasecki: "The Lower It Goes the Tougher It Gets (The Practical Implications of Producing Ultra-Low Sulfur Diesel," Annual Meeting of National Petroleum Refiners Association, San Antonio, March 26–29, 2000.

Maddox, Ronnie, Tom Karlnes, and David A. Lindsay: "Integrated Solutions for Optimized ULSD Economics," Annual Meeting of National Petroleum Refiners Association, San Antonio, Mar. 24–25, 2003.

Downloaded from Digital Engineering Library @ McGraw-Hill (www.digitalengineeringlibrary.com)
Copyright © 2004 The McGraw-Hill Companies. All rights reserved.
Any use is subject to the Terms of Use as given at the website.

UOP UNIONFINING TECHNOLOGY

Nguyen, Tuan A., and Milan Skripek: "Reducing Sulfur in FCC Gasoline via Hydrotreating," AIChE Spring National Meeting, Apr. 17–21, 1994.

Nguyen, Tuan, and Milan Skripek: "VGO Unionfining: Technical Case Studies," *Hydrocarbon Technology International,* Sterling Publications Ltd., London, 1993.

Downloaded from Digital Engineering Library @ McGraw-Hill (www.digitalengineeringlibrary.com)
Copyright © 2004 The McGraw-Hill Companies. All rights reserved.
Any use is subject to the Terms of Use as given at the website.

Downloaded from Digital Engineering Library @ McGraw-Hill (www.digitalengineeringlibrary.com)
Copyright © 2004 The McGraw-Hill Companies. All rights reserved.
Any use is subject to the Terms of Use as given at the website.

Source: HANDBOOK OF PETROLEUM REFINING PROCESSES

CHAPTER 8.4
UOP RCD UNIONFINING PROCESS

Daniel B. Gillis
UOP LLC
Des Plaines, Illinois

INTRODUCTION

The UOP* RCD Unionfining* reduced-crude desulfurization process represents the merger of three of the world's leaders in residual oil processing and catalyst technology. UOP's acquisition of the Unocal PTL Division in January 1995 resulted in the merging of UOP and Unocal's catalyst technology, commercial know-how, and design experience to create a new, improved residual hydrotreating process. Prior to this acquisition in 1993, UOP entered into an alliance with Catalyst & Chemicals Ind. Co. Ltd. (CCIC) in Japan that enabled UOP to offer CCIC's commercially proven portfolio of residual hydrotreating catalysts. In addition UOP has catalysts available from other leading catalyst manufacturers.

The RCD Unionfining process provides desulfurization, denitrification, and demetallization of reduced crude, vacuum-tower bottoms, or deasphalted oil (DAO). Contaminant removal is accompanied by partial conversion of nondistillables. The process employs a fixed bed of catalyst, operates at moderately high pressure, consumes hydrogen, and is capable of greater than 90 percent removal of sulfur and metals. In addition to its role of providing low-sulfur fuel oil, the process is frequently used to improve feedstocks for downstream conversion units, such as cokers, fluid catalytic crackers (FCCs), and hydrocrackers.

MARKET DRIVERS FOR RCD UNIONFINING

The first commercial reduced-crude desulfurization unit, which came on-stream in 1967, was a licensed design from UOP. The residual hydrotreating units produced a low-sulfur fuel oil product that was in increasing demand as a result of the stringent laws relating to air pollution that were being enacted in the industrialized countries. Units were designed in the 1970s to produce fuel oil with a sulfur level as low as 0.3 wt %. The trend toward low-sulfur fuel oil has now extended around the world.

*Trademark and/or service mark of UOP.

Downloaded from Digital Engineering Library @ McGraw-Hill (www.digitalengineeringlibrary.com)
Copyright © 2004 The McGraw-Hill Companies. All rights reserved.
Any use is subject to the Terms of Use as given at the website.

UOP RCD UNIONFINING PROCESS

Other drivers have added to the need for the RCD Unionfining process. Fuel oil demand has been declining at a rate of about 0.2 percent per year since the 1980s, and this decline has been coupled with a growth of about 1.4 percent in the demand for refined products. As the demand for heavy fuel oil has fallen, the price differential between light and heavy crude oil has increased. This price differential has given the refiner an economic incentive to process heavy crude. However, heavy crude not only produces a disproportionate share of residual fuel, but also is usually high in sulfur content. Because heavy, high-sulfur crude is a growing portion of the worldwide crude oil reserves, refiners looking for future flexibility have an incentive to install substantial conversion and desulfurization capacity to produce the required product slate. In addition to providing low-sulfur fuel oil, the RCD Unionfining process provides excellent feedstock for downstream conversion processes producing more valuable transportation fuels.

CATALYST

Catalysts having special surface properties are required to provide the necessary activity and stability to cope with reduced-crude components. The cycle life of the catalyst used in the RCD Unionfining process is generally set by one of three mechanisms:

- Excessive buildup of impurities, such as scale or coke, that leads to unacceptable pressure drop in the reactor
- Coke formation from the decomposition and condensation of heavy asphaltic molecules
- Metal deposition in catalyst pores from the hydrocracking of organometallic compounds in the feed

UOP provides a complete portfolio of catalysts to handle each of these three mechanisms (Table 8.4.1).

Feed filtration for removing scale particulates is a standard part of the RCD Unionfining design. In most cases, this filtration satisfactorily prevents buildup of scale on the catalyst bed, and the resulting pressure drop does not limit cycle life. However, some feeds contain unfilterable components. Under these circumstances, the catalyst bed itself acts as a filter, and the impurities build up in the top section of catalyst to create unacceptable pressure drop. The CDS-NP series of catalyst helps prevent this problem by increasing the amount of void space in the top of the reactor for the impurities to collect. The CDS-NP catalysts are designed as a macaroni shape in $^1/_4$-in and $^1/_6$-in sizes. The macaroni shape maximizes the amount of void space and catalyst surface area available for deposition of the impurities. The catalysts are also loaded from the larger to smaller size. This kind of loading, which is called *grading* the catalyst bed, helps to maximize the void space available for deposition.

Coke formation reduces catalyst effectiveness by decreasing the activity of the reactive surface and decreasing the catalyst-pore volume needed for metals accumulation. For a given catalyst and chargestock operating under steady-state conditions, the amount of coke on the catalyst is a function of temperature and pressure. Successful hydrodesulfurization of reduced crudes requires that temperatures and pressures be selected to limit coke formation. When coke formation is limited, ultimate catalyst life is determined by the rate of metals removal from organometallic compounds in reduced crude and by the catalyst-pore volume available for the accumulation of metals.

The deposition rate of metals from organometallic compounds correlates with the level of desulfurization for a given catalyst. Thus, the rate of catalyst deactivation by metals

Downloaded from Digital Engineering Library @ McGraw-Hill (www.digitalengineeringlibrary.com)
Copyright © 2004 The McGraw-Hill Companies. All rights reserved.
Any use is subject to the Terms of Use as given at the website.

UOP RCD UNIONFINING PROCESS

TABLE 8.4.1 CCIC Catalyst Portfolio

Catalyst name	Application	Size and shape
CDS-NP1 CDS-NP5	ΔP relaxation and HDM	$^1/_4$ in shaped 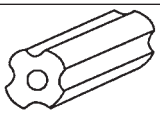
CDS-NPS1 CDS-NPS5	ΔP relaxation and HDM	$^1/_6$ in shaped 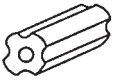
CDS-DM1	HDM	
CDS-DM5	HDM	
CDS-R95	HDM/HDS	$^1/_8$, $^1/_{12}$, $^1/_{16}$, $^1/_{22}$ in cylindrical or shaped
CDS-R25H	HDS	
CDS-R55	HDS	

HDS = hydrodesulfurization; HDM = hydrodemetallization.

deposition increases with the increasing level of desulfurization. Metals deposition results from the conversion of sulfur-bearing asphaltenes. Conversion exposes catalyst pores to the portion of the feed that is highest in organometallics.

The catalyst deactivation rate is also a function of feedstock properties. Heavier reduced crudes with high viscosities, molecular weights, and asphaltene contents tend to be more susceptible to coke formation. Hence, higher pressures and lower space velocities are required for processing these materials. Correlations developed on the basis of commercial data and pilot-plant evaluation of many different reduced crudes can predict the relationship between the hydrodesulfurization reaction rate and the deactivation rate and reduced-crude properties.

The UOP-CCIC catalyst portfolio has been developed to maximize both the removal of sulfur, metals, and other impurities such as nitrogen and Conradson carbon and the life of the catalyst. The CDS-DM series catalysts are typically loaded downstream of the CDS-NP catalysts and are designed for maximum metal-holding capacity. Although their metals-removal activity is high, they maximize the removal of the resin-phase metals and minimize the removal of asphaltene-phase metals. (For an explanation of the terms *resin phase* and *asphaltene phase,* see the following "Process Chemistry" section.) The removal of asphaltene-phase metals can lead to excessive formation of coke precursors, which ultimately reduce the life of downstream catalysts. The CDS-R9 series catalysts are typically located downstream of the CDS-DM catalysts. These transition catalysts have intermediate activity for demetallization and desulfurization and are used to gradually move from maximum demetallization to maximum desulfurization. Once again, the gradual transition helps to minimize the formation of coke precursors, which could lead to shortened catalyst life. The final catalysts are the CDS-R25/R55 series, which have maximum desulfurization activity. By the time the residual oil reaches this series of catalysts, the metals level is sufficiently low to prevent metals deactivation.

In addition to this portfolio of conventional desulfurization and demetallization catalysts, several custom catalysts are available for the RCD Unionfining process. The R-HAC1 catalyst is a residual, mild-hydrocracking catalyst intended for use with lighter feedstocks. Although it has the same hydrodesulfurization activity as conventional HDS catalysts, it produces 3 to 4 vol % more diesel fuel without an increase in naphtha or gas yields. The CAT-X catalyst is designed as an FCC feed pretreatment catalyst. The FCC microactivity testing (MAT) of feeds processed over the CAT-X catalyst has shown an increase in the gasoline yield of as much as 5 percent. Typical catalyst loadings are shown in Fig. 8.4.1.

Downloaded from Digital Engineering Library @ McGraw-Hill (www.digitalengineeringlibrary.com)
Copyright © 2004 The McGraw-Hill Companies. All rights reserved.
Any use is subject to the Terms of Use as given at the website.

UOP RCD UNIONFINING PROCESS

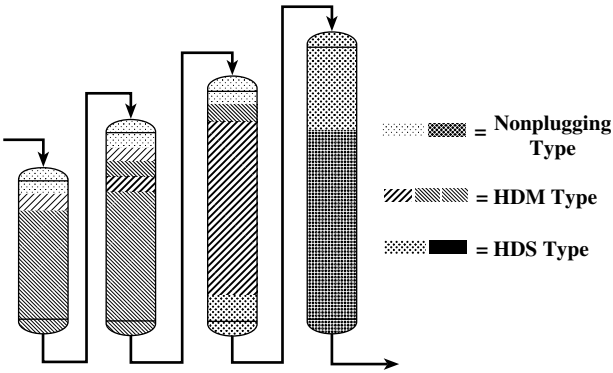

FIGURE 8.4.1 Typical catalyst loading.

PROCESS CHEMISTRY

A *residual* (or "resid") is a complex mixture of heavy petroleum compounds that are rich in aromatic structures, heavy paraffins, sulfur, nitrogen, and metals. An *atmospheric residual* (*AR*) is a material that has been produced in an atmospheric-pressure fractionation column as a bottoms product (ATB) when the boiling endpoint of the heaviest distilled product is at or near 343°C (650°F). The bottoms is then said to be a 343°C+ (650°F+) atmospheric residual. A *vacuum residual* (*VR*) is produced as bottoms product from a column running under a vacuum when the boiling endpoint of the heaviest distilled product is at or near 566°C (1050°F). The bottoms is then said to be a 566°C+ (1050°F+) vacuum residual.

Residual components can be characterized in terms of their solubility:

Saturates. Fully soluble in pentane; this fraction contains all the saturates.

Aromatics. Soluble in pentane and separated by chromatography; this fraction contains neutral aromatics.

Resins. Soluble in pentane and absorb on clay; this fraction contains polar aromatics, acids, and bases.

Asphaltenes. Those that are insoluble in pentane (*pentane insolubles*) and those that are insoluble in heptane (*heptane insolubles*); the weight percent of pentane insolubles is always greater than the weight percent of heptane insolubles.

Typically, the conversion reaction path in the RCD Unionfining process is from asphaltenes to resins, resins to aromatics, and aromatics to saturates.

With the exception of the lightest fractions of crude oil, impurities can be found throughout the petroleum boiling range. Impurity concentrations of each fraction increase with the boiling point of the fraction. Examples of this situation for sulfur and nitrogen are shown in Figs. 8.4.2 and 8.4.3.

Of all the components in the residual, the asphaltene components are the most difficult to work with. Asphaltene molecules are large and are rich in sulfur, nitrogen, metals (Fe, Ni, V), and polynuclear aromatic compounds. These components are primarily the ones that deactivate the catalyst through metals contamination or coke production. Characterization of some typical atmospheric residuals along with their respective asphal-

Downloaded from Digital Engineering Library @ McGraw-Hill (www.digitalengineeringlibrary.com)
Copyright © 2004 The McGraw-Hill Companies. All rights reserved.
Any use is subject to the Terms of Use as given at the website.

UOP RCD UNIONFINING PROCESS

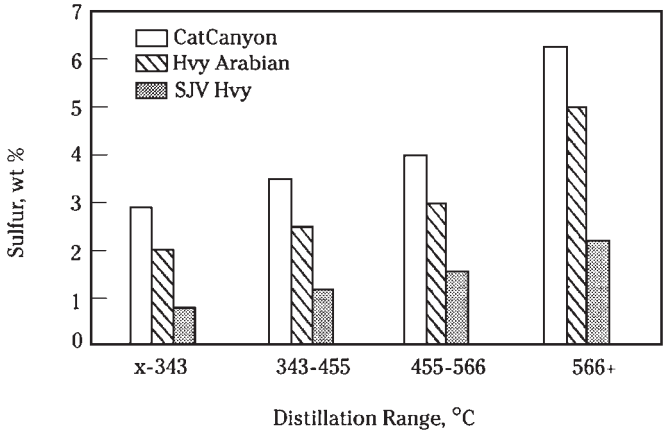

FIGURE 8.4.2 Sulfur distribution.

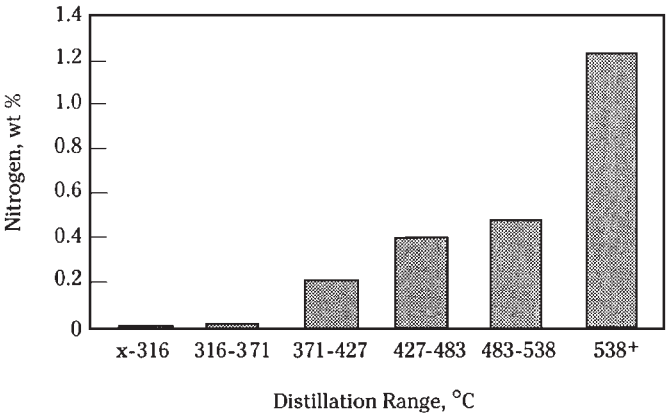

FIGURE 8.4.3 Nitrogen distribution in Hondo California crude.

tene components is shown in Table 8.4.2. An example of an asphaltene structure can be seen in Fig. 8.4.4. Typically, the impurities are buried deep inside the asphaltene molecule, and so severe operating conditions are required to remove them.

PROCESS DESCRIPTION

Operating Variables

For a specific feedstock and catalyst package, the degree of demetallization, desulfurization, and conversion increases with the increasing severity of the RCD Unionfining operation. The operating variables are pressure, recycle-gas rate, space velocity, and temperature.

Downloaded from Digital Engineering Library @ McGraw-Hill (www.digitalengineeringlibrary.com)
Copyright © 2004 The McGraw-Hill Companies. All rights reserved.
Any use is subject to the Terms of Use as given at the website.

UOP RCD UNIONFINING PROCESS

TABLE 8.4.2 AR Characterization

	Crude source		
	Arabian Heavy	Hondo	Maya
AR properties:			
Sulfur, wt %	4.29	5.9	4.4
NI + V, wt ppm	108	372	500
Asphaltenes, wt %	12.6	13.9	25.2
Asphaltene properties:			
Sulfur, wt %	6.5	7.7	6.4
Ni + V, wt ppm	498	1130	1570

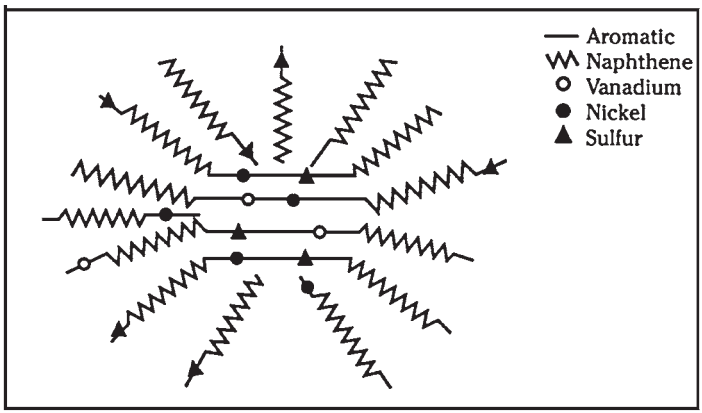

FIGURE 8.4.4 Asphaltene structure.

Pressure. Increasing hydrogen partial pressure decreases the catalyst deactivation rate at constant reactor temperature because the formation of carbonaceous deposits, which deactivate the catalyst, is thereby retarded. The increased pressure also increases the activity for desulfurization, demetallization, and denitrification. Increased hydrogen partial pressure can be obtained by increasing total pressure or by increasing the hydrogen purity of the makeup gas, which together with a recycle-gas scrubber to remove H_2S maximizes hydrogen partial pressure.

Recycle-Gas Rate. Increasing the recycle-gas rate increases the hydrogen/hydrocarbon ratio in the reactor. This increased ratio acts in much the same manner as increased hydrogen partial pressure.

Space Velocity. Increasing the space velocity (higher feed rate for a given amount of catalyst) requires a higher reactor temperature to maintain the same impurity removal level and results in an increase in the deactivation rate.

Temperature. Increasing temperature increases the degree of impurity removal at a constant feed rate. operating at an increased temperature level increases the catalyst deactivation rate. as the catalyst operating cycle proceeds, reactor temperature is usually increased because of the disappearance of active catalyst sites.

Downloaded from Digital Engineering Library @ McGraw-Hill (www.digitalengineeringlibrary.com)
Copyright © 2004 The McGraw-Hill Companies. All rights reserved.
Any use is subject to the Terms of Use as given at the website.

UOP RCD UNIONFINING PROCESS

Impact of Feedstock Quality and Processing Objectives

The ease of processing a feedstock depends on the nature of the asphaltenic molecule and the distribution of contaminants throughout the resin and asphaltene fractions. Relative processing severity is dependent on feedstock type and processing objectives (Fig. 8.4.5). Consequently, the process operates over a large range of operating conditions: 1500 to 3000 lb/in^2 and 0.10 to 1.0 LHSV. Feedstocks with high contaminants, such as vacuum residues, typically have higher pressures and lower space velocities.

Process Flow

A simplified flow diagram of the UOP RCD Unionfining process is presented in Fig. 8.4.6. The filtered liquid feed is combined with makeup hydrogen and recycled separator offgas and sent first to a feed-effluent exchanger and then to a direct-fired heater. In this flow scheme, the direct-fired heater is shown as a two-phase heater, but the alternative of separate feed and gas heaters is also an option. The mixed-phase heater effluent is charged to a guard bed and then to the reactor or reactors. As indicated earlier, the guard bed is loaded with a *graded bed* of catalyst to guard against unacceptable pressure drop, but this catalyst also performs some impurities removal. Removal of the remaining impurity occurs in the reactor.

The RCD Unionfining reactors use a simple downflow design, which precludes problems of catalyst carryover and consequent plugging and erosion of downstream equipment. Because this reactor system has three phases, uniform flow distribution is crucial. UOP provides special reactor internals to ensure proper flow distribution. The reactor-effluent stream flows to a hot separator to allow a rough separation of heavy liquid products, recycle gas, and lighter liquid products. The hot separator overhead is cooled and separated again to produce cold separator liquid and recycle gas, which is scrubbed to remove H_2S before being recycled. A portion of the scrubbed recycle gas is sent to membrane separation to reject light components, mainly methane, that are formed in the reactor. If these components are not removed, they could adversely affect the hydrogen partial pressure in the reactor. Hot separator liquid is fed to a hot flash drum, where the overhead is cooled and mixed with cold separator liquid, and the mixture is charged to the cold flash drum. Bottoms from both the hot and cold flash drums are charged to the unit's fractionation system, which can be set up to either yield low-sulfur fuel oil or match feed specifications for downstream processing.

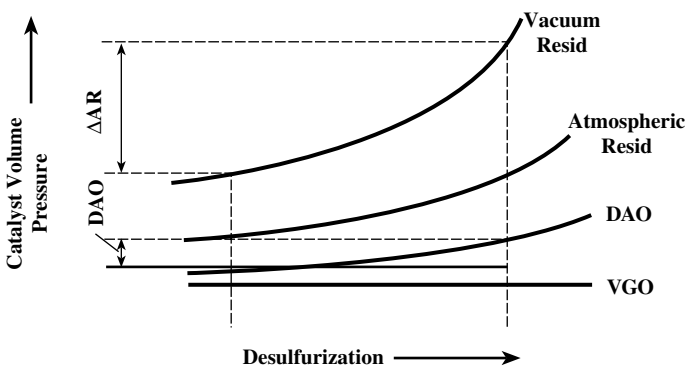

FIGURE 8.4.5 Required processing severity versus feedstock type.

Downloaded from Digital Engineering Library @ McGraw-Hill (www.digitalengineeringlibrary.com)
Copyright © 2004 The McGraw-Hill Companies. All rights reserved.
Any use is subject to the Terms of Use as given at the website.

UOP RCD UNIONFINING PROCESS

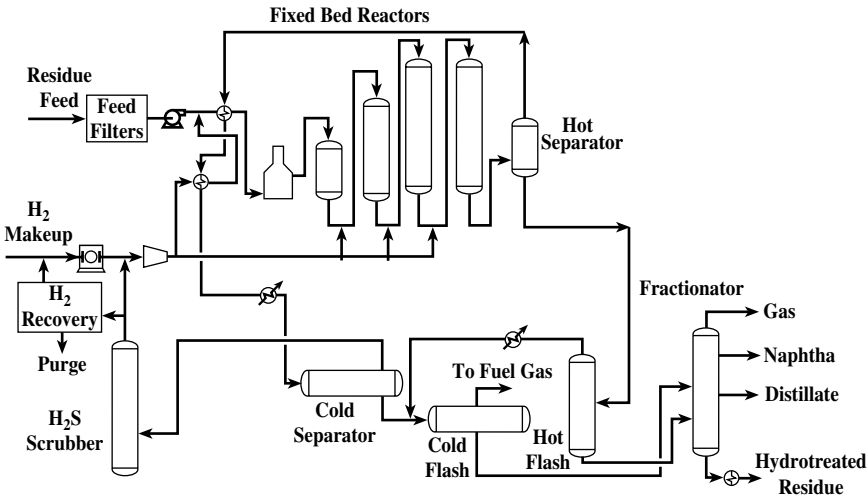

FIGURE 8.4.6 RCD Unionfining process.

Process Applications

As trends toward heavier crudes and lower fuel oil demand have become evident, UOP has devoted increased attention to bottom-of-the-barrel processing. As a result, several flow schemes that offer a variety of advantages have been developed. The most common of these flow schemes is shown in Fig. 8.4.7. Atmospheric residual oil is directly hydrotreated to provide FCC feed. Hydrotreating allows a high percentage of the crude to be catalytically cracked to gasoline while maintaining reasonable FCC catalyst consumption rates and regenerator SO_x emissions. Hydrotreating can also help refiners meet some of the newly emerging gasoline sulfur specifications in most parts of the world.

For upgrading residual oils high in metals, the best processing route may be a combination of solvent extraction (UOP/FWUSA solvent deasphalting process) and the RCD Unionfining process. The SDA process separates vacuum residual oil with a high metal content into a deasphalted oil (DAO) of relatively low metal content and a pitch of high metal content. The pitch has several uses, including fuel oil blending, solid-fuel production, and feed to a partial-oxidation unit for hydrogen production. If the metal and Conradson carbon content of the DAO are sufficiently low, it may be used directly as an FCC or hydrocracker feed component. In some cases, however, hydrotreating the DAO prior to cracking is desirable, as shown in Fig. 8.4.8. This combination of processes shows better economics than either process alone. The arrangement provides an extremely flexible processing route, because a change in feedstock can be compensated for by adjusting the ratio of DAO to pitch in the SDA unit to maintain DAO quality. In some cases, the treated material can be blended with virgin vacuum gas oil (VGO) and fed directly to the conversion unit.

When the RCD Unionfining process is used to pretreat coker feed (Fig 8.4.9), it reduces the yield of coke and increases its quality and produces a higher-quality cracking feedstock.

Of course, these examples are just a few of the bottom-of-the-barrel upgrading flow schemes involving the RCD Unionfining process. The correct selection of flow scheme is typically specific to a given refiner's needs and crude type.

Downloaded from Digital Engineering Library @ McGraw-Hill (www.digitalengineeringlibrary.com)
Copyright © 2004 The McGraw-Hill Companies. All rights reserved.
Any use is subject to the Terms of Use as given at the website.

UOP RCD UNIONFINING PROCESS

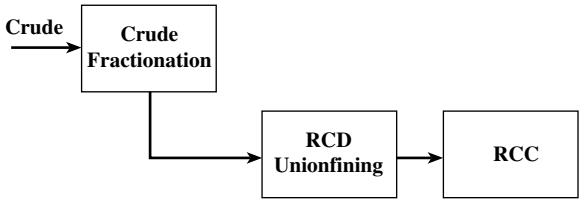

FIGURE 8.4.7 Maximum gasoline production.

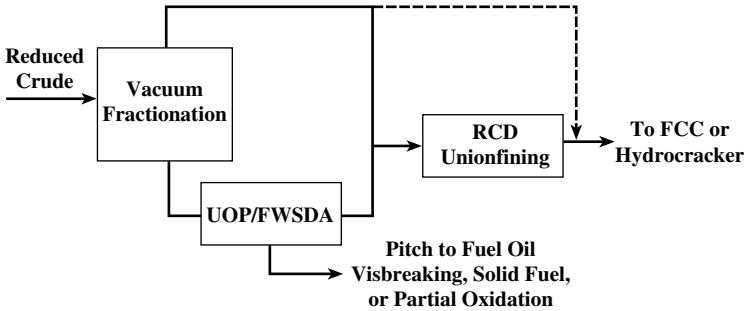

FIGURE 8.4.8 Maximum flexibility flow scheme.

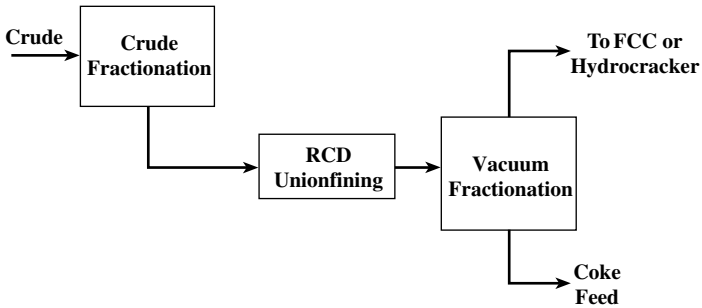

FIGURE 8.4.9 High-quality coke production.

OPERATING DATA

The yield and product properties for processing a blended Middle Eastern reduced crude in an RCD Unionfining unit are shown in Table 8.4.3. Utilities required to operate a 132.5-m^3/h [20,000 barrels per stream-day (BPSD)] RCD Unionfining unit are shown in Table 8.4.4. The estimated erected cost for this unit is $70 million.

Downloaded from Digital Engineering Library @ McGraw-Hill (www.digitalengineeringlibrary.com)
Copyright © 2004 The McGraw-Hill Companies. All rights reserved.
Any use is subject to the Terms of Use as given at the website.

UOP RCD UNIONFINING PROCESS

TABLE 8.4.3 Yields and Product Properties of a Middle East Blend Reduced Crude

	Yields on reduced crude						
	Wt %	Vol %	Specific gravity	Sulfur, wt %	Nitrogen, vol %	Viscosity, cSt at 50°C	V + N, ppm
Charge:							
Raw oil	100.00	100.00	12.1	4.1	0.31	2259	141
Chem. H_2 consump.	1.29 (140 m^3/m^3)	—	—	—	—	—	—
Products:							
NH_3	0.19	—	—	—	—	—	—
H_2S	3.91	—	—	—	—	—	—
C_2	0.67	—	—	—	—	—	—
C_3	0.36	—	—	—	—	—	—
C_4	0.36	—	—	—	—	—	—
C_5–154°C	1.10	1.50	0.720	0.004	0.004	—	—
154–360°C	14.70	16.70	0.868	0.02	0.02	2–3	—
360°C+	80.00	84.20	0.935	0.47	0.17	151	18
Total	101.29	102.40	—	—	—	—	

TABLE 8.4.4 Typical Utilities Required for an RCD Unionfining Unit*

	Per barrel	Per cubic meter
Hydrogen	750 SCF	127 nm^3
Catalyst	0.1 lb	0.29 kg
Power	5 kWh	31.5 kWh
HP steam	11 lb	31.4 kg
Cooling water	22 gal	0.5 m^3

COMMERCIAL INSTALLATIONS

The first commercial direct reduced-crude desulfurization unit was a UOP unit that went on-stream in 1967 at the Chiba, Japan, refinery of Idemitsu Kosan. The first commercial direct vacuum-resid conversion unit was a UOP unit that went on-stream in 1972 at the Natref, South Africa, refinery. A total of 27 RCD Unionfining units have been licensed. As of early 2002, more than 143,000 m^3/h (900,000 BPSD) of RCD Unionfining capacity has been licensed. These units process a variety of feeds, including DMOs and vacuum resids and atmospheric resids. Applications for this process include conventional desulfurization, downstream conversion unit pretreatment, and resid nondistillable conversion.

Downloaded from Digital Engineering Library @ McGraw-Hill (www.digitalengineeringlibrary.com)
Copyright © 2004 The McGraw-Hill Companies. All rights reserved.
Any use is subject to the Terms of Use as given at the website.

Source: HANDBOOK OF PETROLEUM REFINING PROCESSES

CHAPTER 8.5
UOP CATALYTIC DEWAXING PROCESS

Hemant Gala
UOP LLC
Des Plaines, Illinois

INTRODUCTION

The UOP Catalytic Dewaxing process, formerly known as the Unicracking* /DW* process, is a fixed-bed process for improving the cold flow properties of various hydrocarbon feedstocks. The process is applied for improving the pour point of lube oil base stocks (LOBSs) and middle distillates, cloud point of diesel fuel, and freeze point of jet fuel. These properties are critical for the low-temperature performance of these products.

The cold flow properties are strongly related to the normal and near-normal (minimally branched) paraffins present in these LOBSs and fuels. As the concentration of the normal and near-normal paraffins increases in these hydrocarbon feedstocks, their pour point, cloud point, and freeze point temperatures increase. The cold flow property temperatures also increase with the molecular weight (chain length) of the paraffins. The UOP Catalytic Dewaxing process improves the cold flow properties by selectively cracking the long-chain normal and near-normal paraffins from the hydrocarbon steams.

The Catalytic Dewaxing process operates across a rather narrow range of design parameters. The primary roles are LOBS dewaxing and middle-distillate flow property improvement. At the same time, the process deep-hydrotreats kerosene or diesel fuel to remove sulfur and nitrogen and also saturates aromatic compounds. Key process features of the Catalytic Dewaxing process include

- Excellent product stability
- Excellent product color
- Constant product quality throughout a catalyst cycle
- Minimum viscosity reduction compared to other dewaxing processes
- Long catalyst cycle life
- Flexibility to produce lube stocks and process distillates in the same unit

*Trademark and/or service mark of UOP.
*Trademark and/or service mark of UOP.

Downloaded from Digital Engineering Library @ McGraw-Hill (www.digitalengineeringlibrary.com)
Copyright © 2004 The McGraw-Hill Companies. All rights reserved.
Any use is subject to the Terms of Use as given at the website.

UOP CATALYTIC DEWAXING PROCESS

PROCESS DESCRIPTION

The Catalytic Dewaxing process uses a dual-function, non-noble-metal zeolite catalyst to selectively hydrocrack the long-chain paraffinic components in the feedstock. Typically, the first stage of the process involves hydrotreatment of the incoming feedstock through olefin saturation, desulfurization, and denitrification reactions. Pretreating protects the dewaxing catalyst and provides a feed with a low organic sulfur and nitrogen content, which improves the hydrocracking performance. Pretreatment of the feed may not be necessary if the feed is relatively free of organic sulfur and nitrogen.

The process uses two kinds of catalysts. The first is a high-activity desulfurization and dentrification catalyst, which gives an optimum balance between process objectives and cost. The second, a proprietary dewaxing catalyst, selectively cracks straight-chain paraffins. The zeolite support used for the dewaxing catalyst has a pore size that selectively allows the normal and near-normal paraffins to enter the pore structure at the expense of highly branched paraffins. As a result, the rate of cracking for the normal and near-normal paraffins is much higher than that for the branched paraffins. The very selective reduction of the long-chain paraffins thus achieved improves the cold flow properties of the hydrocarbon feedstock. The flexible catalyst system of pretreat and dewaxing catalyst enables a refiner to vary the feedstocks and contaminants without affecting product quality or run length.

UOP has several highly active, long-lived Catalytic Dewaxing catalysts. Process objectives determine the type of catalyst used in a particular unit. Catalytic Dewaxing catalysts typically last 6 to 8 years. During that time, they are regenerated as needed. Typical cycles last 2 to 4 years between regenerations.

PROCESS FLOW

Figure 8.5.1 shows a simplified process flow for a typical Catalytic Dewaxing unit. Fresh feed is preheated and combined with hot recycle gas. The mixture enters the first reactor for treating by a high-activity denitrogenation-desulfurization catalyst, which converts organic nitrogen and sulfur to ammonia and hydrogen sulfide. The reactions are exothermic and cause a temperature rise in the reactor. The reactions are maintained at as low a temperature as possible to maximize catalyst life. Figure 8.5.1 shows two reactors for simplicity. In an actual design, both the pretreat and the dewaxing catalysts an be loaded in a single reactor. The choice of one versus two reactors depends on the feed rate to the unit, reactor size limitations (if any), operational flexibility desired, etc.

The effluent from the pretreat section is cooled with cold quench gas before entering the dewaxing section, which contains one of UOP's highly selective Catalytic Dewaxing catalysts. These active catalysts function well in the presence of ammonia and hydrogen sulfide. As the feed flows over the dewaxing catalyst, long-chain normal paraffins are selectively cracked into smaller molecules, thereby improving the desired cold flow property of the feed. The average temperature in the dewaxing section is adjusted to obtain the targeted improvement in the cold flow property.

Dewaxing reactions are exothermic and must be closely controlled because the dewaxing catalyst is sensitive to temperature. As in the pretreater section, reactor temperatures are maintained as low as possible. In the dewaxing section, this low temperature not only prolongs catalyst life, but also maximizes liquid yields and helps maintain control.

In both reactors, temperature is controlled by the injection of cold, hydrogen-rich recycle gas at predetermined points. A unique combination of patented internals allows for sufficient mixing of recycle gas with the hot reactants emerging from the previous catalyst bed and the effective distribution of the quenched mixture to the top of the next catalyst bed.

Downloaded from Digital Engineering Library @ McGraw-Hill (www.digitalengineeringlibrary.com)
Copyright © 2004 The McGraw-Hill Companies. All rights reserved.
Any use is subject to the Terms of Use as given at the website.

UOP CATALYTIC DEWAXING PROCESS

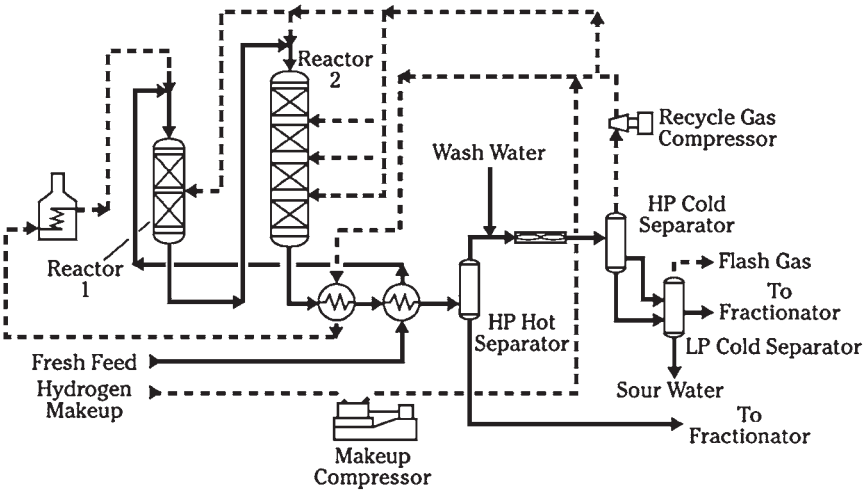

FIGURE 8.5.1 Catalytic Dewaxing process.

Effluent from the dewaxing section is cooled by exchange with several process streams, including feed and recycle gas. The effluent is then flashed into a hot high-pressure separator, where liquid products are separated from hydrogen-rich vapors. The liquid fraction from this separator is directed to the fractionation section, and vapors are sent to a cold high-pressure separator after being cooled in reactor effluent coolers. Steam condensate or deaerated boiler feedwater is injected upstream of the reactor effluent air condensers to minimize corrosion and prevent deposition of ammonia salts. The cold-separator vapor is joined by hydrogen makeup gas to become recycle gas. Liquid hydrocarbon flows into a low-pressure separator.

Flash gas from the low-pressure separator is routed to a light-ends recovery unit or to sour fuel gas. Liquid hydrocarbon from the low-pressure separator exchanges heat with the reactor effluent before flowing into the stripper in the fractionation section.

YIELD PATTERNS

The Catalytic Dewaxing process can be applied to a wide range of feedstocks for dewaxing purposes. Table 8.5.1 shows typical yields and properties for vacuum gas oil (VGO) and diesel applications.

INVESTMENT AND OPERATING EXPENSES

The capital investment associated with a Catalytic Dewaxing unit is closely related to the feedstock type and quality as well as the desired level of dewaxing for final products. The capital investment for a typical Catalytic Dewaxing unit is given in Table 8.5.2, and utilities are listed in Table 8.5.3.

The unit can be designed to provide the flexibility of processing very different feedstocks in blocked mode of operation. Considerable cost savings is achieved in such a

Downloaded from Digital Engineering Library @ McGraw-Hill (www.digitalengineeringlibrary.com)
Copyright © 2004 The McGraw-Hill Companies. All rights reserved.
Any use is subject to the Terms of Use as given at the website.

UOP CATALYTIC DEWAXING PROCESS

TABLE 8.5.1 Typical Yield and Property Patterns for Catalytic Dewaxing Process

	VGO feed	Diesel feed
Yields, wt %:		
C_1–C_3	0.50	2.50
C_4–260°C (500°F) naphtha	24.50	24.50
Dewaxed product	75.00	73.00
Feed properties:		
°API gravity	27.7	35.1
Sulfur, wt ppm	9500	1.7
Nitrogen, wt ppm	690	1.0
Viscosity, cSt at 100°C (212°F)	4.25	—
Pour point, °C (°F)	30 (86)	21 (70)
Dewaxed product properties:		
°API gravity	27.4	37.5
Sulfur, wt ppm	20	1.0
Nitrogen, wt ppm	20	1.0
Viscosity, cSt at 100°C (212°F)	3.63	—
Pour point, °C (°F)	−20.5 (25.0)	−12 (110)

Note: °API = degrees on American Petroleum Institute scale.

TABLE 8.5.2 Capital Investment

Unit feed rate, m^3/h (BPSD)	165.7 (25,000)
Feedstock:	
°API gravity	28.3
Specific gravity	0.8855
Sulfur, wt %	0.64
Nitrogen, wt ppm	380
Estimated erected cost, million $	36

Note: BPSD = barrels per stream day.

design by eliminating duplicate equipment that may be necessary in two stand-alone units. Some compromise in the design of some equipment may be necessary to accommodate the processing objectives of the two feeds.

COMMERCIAL EXPERIENCE

Several UOP licensed Catalytic Dewaxing plants have been put into operation or are in design. The first unit was a vacuum gas oil unit processing 10,000 BPD of shale oil to remove paraffins at Unocal's shale oil plant in Parachute, Colorado.

In 1988, a Unicracking/DW unit was commissioned at OMV's Schwechat refinery in Austria. This unit was designed to met two objectives: deep hydrogenation and pour point reduction of high-viscosity VGO feedstocks. During the winter months, this same unit is used to improve the pour point of diesel.[1]

The second catalyst cycle in the OMV Unicracking/DW unit began in July 1992 and ran for about 5 years. Both the pretreat and the dewaxing catalysts show excellent stabili-

Downloaded from Digital Engineering Library @ McGraw-Hill (www.digitalengineeringlibrary.com)
Copyright © 2004 The McGraw-Hill Companies. All rights reserved.
Any use is subject to the Terms of Use as given at the website.

UOP CATALYTIC DEWAXING PROCESS

TABLE 8.5.3 Utilities

Power, kW	5100
Steam (tracing only)	Minimal
Cooling water, m^3/h (gal/min)	80 (352)
Condensate, m^3/h (gal/min)	4 (17.6)
Fuel absorbed, million kcal/h (million Btu/h)	20.5 (81.3)

ty of the UOP HC-K catalyst in the pretreating reactor and UOP HC-80 catalyst in the downstream dewaxing reactor.[2] What makes this stability even more impressive is the high level of contaminants that the HC-80 dewaxing catalyst is tolerating. During this cycle, the unit averaged 133 percent of the design feed rate and had typical feed sulfur and nitrogen contents of 0.9 wt % and 700 wt ppm, respectively. At these conditions, the HC-80 catalyst is routinely processing effluent directly from the pretreating reactor that contains an average of more than 100 wt ppm unconverted nitrogen with no detrimental effects.

This unit easily met all OMV's processing objectives. Even at the high feed rate, the pour point of the VGO feedstock was reduced by more than 100°F. The dewaxed product met all other specifications, and the yield structure was quite stable. When processing diesel, the pour point was reduced by about 35°F, the cloud point was reduced by about 80°F, and the diesel product had excellent color (0.5 ASTM). The products from both the VGO and diesel operations contain less than 20 ppm sulfur and less than 20 ppm nitrogen. The unit is currently in its third cycle.

BIBLIOGRAPHY

1. R. Bertram, and F. Danzinger: NPRA Annual Meeting, San Antonio, Tex., March 1994, AM-94-50.
2. D. C. Martindale, G. J. Antos, K. Baron, and R. Bertram: NPRA Annual Meeting, San Antonio, Tex., March 1997, AM-97-25.

Downloaded from Digital Engineering Library @ McGraw-Hill (www.digitalengineeringlibrary.com)
Copyright © 2004 The McGraw-Hill Companies. All rights reserved.
Any use is subject to the Terms of Use as given at the website.

Downloaded from Digital Engineering Library @ McGraw-Hill (www.digitalengineeringlibrary.com)
Copyright © 2004 The McGraw-Hill Companies. All rights reserved.
Any use is subject to the Terms of Use as given at the website.

Source: HANDBOOK OF PETROLEUM REFINING PROCESSES

CHAPTER 8.6
UOP UNISAR PROCESS FOR SATURATION OF AROMATICS

H. W. Gowdy
UOP LLC
Des Plaines, Illinois

INTRODUCTION

The UOP* Unisar* process saturates the aromatics in naphtha, kerosene, and diesel feedstocks. The use of highly active noble-metal catalysts permits the reactions to take place at mild conditions. Because of the mild conditions and the very selective catalyst, the yields are high, and hydrogen consumption is largely limited to just the desired reactions. A total of 20 Unisar units have been licensed worldwide.

Among the applications of the Unisar process are smoke-point improvement in aircraft turbine fuels, reduction of the aromatic content of solvent stocks to meet requirements for air pollution control, production of cyclohexane from benzene, and cetane number improvement in diesel fuels. The Unisar process also produces low-aromatics diesel with excellent color and color stability.

This process was first applied to upgrading solvent naphthas and turbine fuel. The first commercial Unisar plant, a unit processing 250,000 metric tons per year (MTA) [6000 barrels per stream day (BPSD)] was built in Beaumont, Texas, and went on-stream early in 1969. It was designed to saturate the aromatics in untreated straight-run solvent naphtha containing 100 wt ppm sulfur. The aromatics were reduced from 15 to 1.0 vol %. The first catalyst cycle lasted more than 8 years. Another of the early plants was started up at Unocal's San Francisco Refinery in 1971. This unit, which processes 600,000 MTA (14,500 BPSD), reduces the aromatics in hydrocracked turbine stock from 30 wt % to less than 4 wt %. During a test at the latter unit, the aromatics were reduced from 29 wt % to less than 0.1 wt %.

APPLICATION TO DIESEL FUELS

In the 1990s, the need to increase the cetane number of diesel fuel has grown. Increasing the cetane number improves engine performance and decreases emissions. Cetane num-

*Trademark and/or service mark of UOP.

Downloaded from Digital Engineering Library @ McGraw-Hill (www.digitalengineeringlibrary.com)
Copyright © 2004 The McGraw-Hill Companies. All rights reserved.
Any use is subject to the Terms of Use as given at the website.

UOP UNISAR PROCESS FOR SATURATION OF AROMATICS

ber is a strong function of hydrocarbon type and number of carbon atoms. Figure 8.6.1 plots cetane number versus number of carbon atoms for compounds in the diesel boiling range. The graph shows that normal paraffins have the highest cetane number, which increases with chain length. Isoparaffins and mononaphthenes with side chains are intermediate in cetane number, and polynaphthenes and polyaromatics have the lowest cetane numbers.

The saturation of aromatics in diesel-range feeds leads to an increase in cetane number (Fig. 8.6.2). However, whether this reaction alone is sufficient to reach cetane numbers near 50, as required in some European countries, depends on the overall compound distribution in each feed. One version of the advanced Unisar catalyst described later in this chapter has built into it some hydrocracking activity to promote naphthenic ring opening and upgrade these low-cetane feedstocks.

These diesel-range feeds typically have substantially higher boiling points and much higher levels of nitrogen and sulfur than the lighter kerosene and solvent feedstocks for which the original Unisar process was developed.

The original noble-metal catalysts used for the Unisar process have limited tolerance to the nitrogen and sulfur contaminants in diesel-range feeds. Thus, new catalysts have been developed to effectively treat these more difficult feeds. In addition, these feeds must be substantially hydrotreated to remove sulfur and nitrogen before they can be treated with the noble-metal Unisar catalysts. A flow scheme that integrates the hydrotreating and aromatics-saturation stages has been developed so that low-sulfur, high-cetane diesel fuels can be efficiently produced.

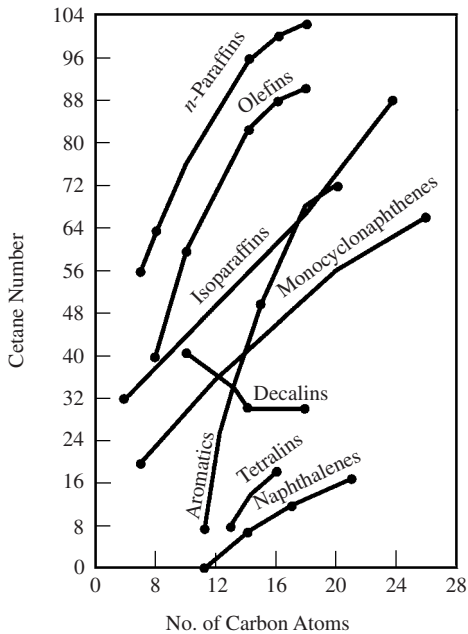

FIGURE 8.6.1 Cetane number versus hydrocarbon type.

Downloaded from Digital Engineering Library @ McGraw-Hill (www.digitalengineeringlibrary.com)
Copyright © 2004 The McGraw-Hill Companies. All rights reserved.
Any use is subject to the Terms of Use as given at the website.

UOP UNISAR PROCESS FOR SATURATION OF AROMATICS

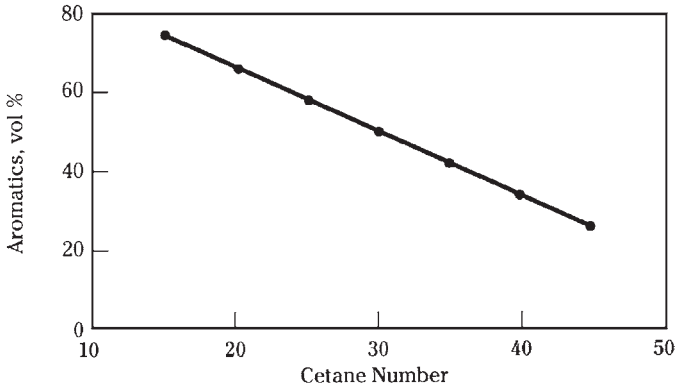

FIGURE 8.6.2 Typical aromatics-cetane relationship.

PROCESS DESCRIPTION

The UOP Unisar process is carried out at moderate temperatures and pressures over a fixed catalyst bed in which aromatics are saturated in a hydrogen atmosphere. Exact process conditions vary, depending on the feedstock properties and the level of aromatics desired in the product.

Chemistry

The primary reaction in the Unisar process is the hydrogenation of aromatics. Other reactions that occur are hydrogenation of olefins, naphthenic ring opening, and removal of sulfur and nitrogen. At conditions that result in significant aromatics hydrogenation, olefins in the feed are completely hydrogenated. When the concentrations of sulfur and nitrogen in the feed are relatively high, the hydrogenation of aromatics is severely limited until the concentrations of heterocompounds have been greatly reduced.

The overall aromatics-saturation reaction rate increases with increases in aromatics concentration, hydrogen partial pressure, and temperature. The reaction rate decreases with increases in the concentration of sulfur and nitrogen compounds and the approach to equilibrium. At low temperatures, aromatics in the product are reduced by increasing the temperature. At these low temperatures, reaction kinetics control the aromatics conversion. However, as temperatures are further increased, a point is reached at which additional temperature increases actually increase aromatics in the product (Fig. 8.6.3). Above this temperature, the reverse dehydrogenation reaction has become dominant, and aromatics conversion is controlled by chemical reaction equilibrium. Thus, using highly active catalysts is important so that lower temperatures—that is, temperatures that are farther from the equilibrium limitation—can be used.

Naphthalene and tetralin have been used as a model to study the reaction mechanism for saturation of diaromatics with the Unisar noble-metal catalyst. The saturation of naphthalene to tetralin and of tetralin to decalin both fit first-order kinetics quite well. However, when these rate constants were used together in a sequential mechanism in which naphthalene is saturated to tetralin and the tetralin is then saturated to decalin, the resultant calculated product distribution did not fit the distribution observed experimentally.

Downloaded from Digital Engineering Library @ McGraw-Hill (www.digitalengineeringlibrary.com)
Copyright © 2004 The McGraw-Hill Companies. All rights reserved.
Any use is subject to the Terms of Use as given at the website.

UOP UNISAR PROCESS FOR SATURATION OF AROMATICS

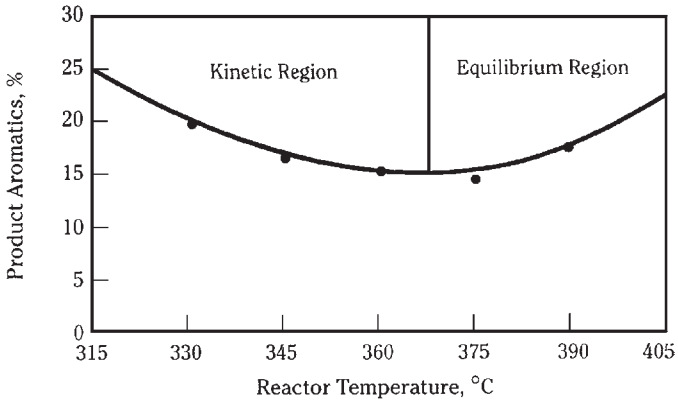

FIGURE 8.6.3 Temperature effect on diesel aromatics reduction.

When the simultaneous saturation of both the naphthalene rings to yield decalin directly is considered along with the saturation of each ring sequentially, the experimental yield distribution can be reproduced satisfactorily. Furthermore, the reaction leading to the simultaneous saturation of both rings of naphthalene to yield decalin directly without the intermediate formation of tetralin is significantly faster than the saturation of only one ring to yield the intermediate tetralin.

The Unisar catalyst study also showed that the overall rate of naphthalene saturation—that is, the sum of the rates of both saturation reactions—is approximately twice as fast as the saturation of tetralin. This result conforms to the generally accepted concept that diaromatics undergo saturation more readily than monoaromatics.

Catalysts

The Unisar catalysts are composed of noble metals on either an amorphous or molecular-sieve support.

The original AS-100* catalyst was developed for kerosene and naphtha solvent hydrogenation. It is highly active and stable in this service. For example, the Unisar plant at the Unocal San Francisco refinery saturates aromatics in the kerosene cut from the hydrocracker to increase the smoke point. This catalyst was loaded in 1971. The original load is still in the reactors, and it has not been regenerated.

The new AS-250 catalyst was specifically developed to treat diesel feedstocks. The catalyst has greatly improved tolerance to the organic sulfur and nitrogen compounds present in diesel-range feeds and much higher activity and stability when treating these feeds. The AS-250 catalyst is 65°C (150°F) more active that its predecessor. This higher activity allows for a more economic Unionfining* design as a result of lower design pressure and higher space velocity.

The nitrogen and sulfur tolerance of the AS-250 catalyst was demonstrated in a 200-day pilot-plant stability text. The base feed for the study was a 382°C (720°F) endpoint heavy diesel hydrotreated to 50 wt ppm sulfur and 20 wt ppm nitrogen. After more than a

*Trademark and/or service mark of UOP.

Downloaded from Digital Engineering Library @ McGraw-Hill (www.digitalengineeringlibrary.com)
Copyright © 2004 The McGraw-Hill Companies. All rights reserved.
Any use is subject to the Terms of Use as given at the website.

UOP UNISAR PROCESS FOR SATURATION OF AROMATICS

month on-stream, a feed containing 450 wt pm sulfur and 135 wt ppm nitrogen was fed to the unit for 24 hours, and then the base feed was returned to the unit. The AS-250 catalyst showed no permanent activity loss or increase in deactivation rate.

Some hydrocracking activity has been built into the AS-250 catalyst to allow naphthenic ring opening to upgrade low-cetane feedstocks. This catalyst delivers high distillate yields, and the converted material is essentially all naphtha.

Typical Process Conditions

The Unisar reactor conditions depend on the feed properties and on the level of aromatics saturation required. Typical operating conditions for commercial Unisar units are

Space velocity: 1.0 to 5.0 vol/vol · h

Pressure range: 3500 to 8275 kPa (500 to 1200 lb/in^2 gage)

Recycle gas H_2 purity: 70 to 90 mol %

Recycle gas rate: 3000 to 6000 standard cubic feet per barrel (SCFB)

Temperature range: 205 to 370°C (400 to 700°F)

Unisar Process Flow

A typical Unisar unit can be represented by the flow diagram shown in Fig. 8.6.4. Fresh feed to the unit is combined with recycle gas from the separator and with makeup hydrogen. The mixture of gas and feed is heated by exchange with reactor effluent and by a fired heater before entering the reactor. In the reactor, aromatic compounds are hydrogenated to

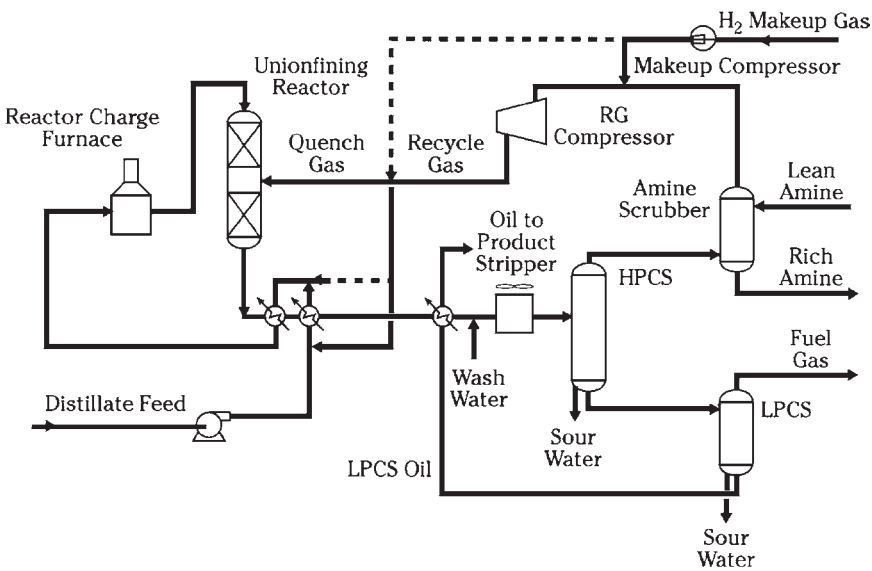

FIGURE 8.6.4 Unisar or Unionfining unit.

Downloaded from Digital Engineering Library @ McGraw-Hill (www.digitalengineeringlibrary.com)
Copyright © 2004 The McGraw-Hill Companies. All rights reserved.
Any use is subject to the Terms of Use as given at the website.

UOP UNISAR PROCESS FOR SATURATION OF AROMATICS

the corresponding naphthenes, olefins are hydrogenated to paraffins, and any organic sulfur compounds are converted to hydrogen sulfide.

Because these catalytic reactions are exothermic, the reactor is divided into multiple catalyst beds that have high-efficiency quench sections in between. In these quench sections, the gas and liquid reactants flowing from the top bed are thoroughly mixed with cold recycle hydrogen to reduce the temperature of the reacting mixture. Then this mixture is distributed over the top of the bed below the quench section. In this way, the temperature is kept in the range necessary for reaction but below the level at which thermodynamic limitations on the reaction rate would be significant.

The reactor effluent stream is initially cooled by heat exchange with the reactor feed and then by air before it enters the gas-liquid separator. The separator gas stream may be scrubbed with an amine solution to remove hydrogen sulfide before the gas is recompressed to the reactor. The need for this scrubbing step depends on the amount of sulfur in the feed.

The separator liquid flows to a stripping column, where any light ends are removed. The finished Unisar product is withdrawn from the bottom of the stripper.

Maximum Quality Distillates (MQD)

When the Unisar process is used to saturate aromatics in feedstocks containing substantial amounts of sulfur and nitrogen, the UOP Unionfining process is used first to remove organic sulfur and nitrogen compounds. Then the Unisar process is used to saturate the aromatics in the hydrotreated feed.

The generalized flow diagram in Fig. 8.6.4 also represents the Unionfining process. Because the Unionfining and Unisar flow diagrams are so similar, the total capital cost would be double that of the Unionfining plant if Unionfining and Unisar steps were done in separate plants. For this reason, the two steps have been combined into the integrated Unionfining-Unisar process (Fig. 8.6.5). The integrated unit has no pressure letdown between the Unionfining and Unisar reactors. Instead, the Unionfining effluent flows to a stripper, where

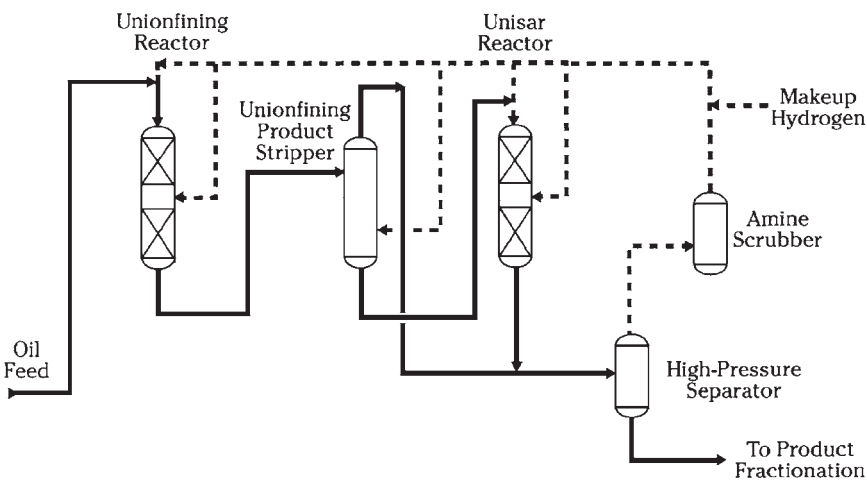

FIGURE 8.6.5 Integrated Unionfining and Unisar unit.

Downloaded from Digital Engineering Library @ McGraw-Hill (www.digitalengineeringlibrary.com)
Copyright © 2004 The McGraw-Hill Companies. All rights reserved.
Any use is subject to the Terms of Use as given at the website.

UOP UNISAR PROCESS FOR SATURATION OF AROMATICS

hydrogen sulfide and ammonia are stripped from the hydrotreated feed by hydrogen. This stripped material is then processed in the Unisar reactor.

The integration of these process steps minimizes required equipment, maximizes heat integration, and optimizes utilities. The total cost of this integrated design is just 30 percent more than that of the original Unionfining plant.

Some refiners are faced with lower-sulfur regulations in the immediate future, but new cetane and aromatics specifications are not expected to go into effect until a few years later. Taking into consideration the return on investment over time and the tight availability of capital, the optimal solution for these refiners is to build the Unionfining portion of the complex first and add the Unisar section later. Consequently, this design was also done so that the hydrogen stripper and Unisar stage can be easily added later. The Unionfining reactor, fired heater, and all the heat exchangers and separators in the initial Unionfining unit have the same size requirements for both the Unionfining unit alone and the integrated Unionfining-Unisar unit.

PROCESS APPLICATIONS

A total of 20 Unisar units have been licensed worldwide. Some typical commercial applications of the Unisar process are shown in Table 8.6.1. The aromatics in the distillate feed are reduced from 24.6 to less than 1 vol %. The aromatics in the kerosene are reduced from 28.2 to 3.0 vol %, and those in the solvent stock are reduced from 10 to less than 0.5 vol %.

An example of upgrading a diesel stock by using the Unisar process is shown in Table 8.6.2. The feedstock properties are shown in the first column. In this example, the feed is light cycle oil (LCO) from a fluid catalytic cracking unit (FCCU). The LCO has 69.9 wt % aromatics and a cetane number of less than 21. The second column shows the results of using the integrated Unionfining-Unisar process to reduce the aromatics content down to low levels. The aromatics have been reduced to 4 wt %, and the cetane number has increased to 44.4.

TABLE 8.6.1 Typical Applications

Feedstock type	Distillate	Kerosene	Solvent stock
Feedstock properties:			
°API gravity	37.8	41.3	63.7
Specific gravity	0.8358	0.8189	0.7249
Boiling range, °F (°C)	501–595 (261–313)	301–567 (149–297)	208–277 (98–136)
Sulfur, wt ppm	3150	340	<2
Aromatics, vol %	24.6	28.2	10.0
C_5 + yields, vol %	101.7	102.1	101.7
Product properties:			
°API gravity	39.0	43.0	65.8
Specific gravity	0.8299	0.8072	0.7173
Sulfur, wt ppm	<2	Nil	Nil
Total aromatics, vol %	<1.0	3.0	<0.5
Hydrogen consumption, SCFB	760	745	330

Note: °API = degrees on American Petroleum Institute scale.

Downloaded from Digital Engineering Library @ McGraw-Hill (www.digitalengineeringlibrary.com)
Copyright © 2004 The McGraw-Hill Companies. All rights reserved.
Any use is subject to the Terms of Use as given at the website.

UOP UNISAR PROCESS FOR SATURATION OF AROMATICS

TABLE 8.6.2 LCO Upgrading with the Unionfining/ Unisar Process

	LCO Feed	Product
°API gravity	0.942 (18.7)	0.852 (34.6)
Sulfur, wt %	1.39	0
Nitrogen, ppm	1107	0
Hydrocarbon types:		
Paraffins	6.6	11.7
Naphthenes	6.1	84.4
Monoaromatics	26.7	3.9
Diaromatics	36.1	0.1
Triaromatics	7.1	0.0
Heterocompounds	14.8	0
Olefins	2.5	0
Cetane number	<21	44.4
Cetane index, D-976	26.6	45.3

Downloaded from Digital Engineering Library @ McGraw-Hill (www.digitalengineeringlibrary.com)
Copyright © 2004 The McGraw-Hill Companies. All rights reserved.
Any use is subject to the Terms of Use as given at the website.

Source: HANDBOOK OF PETROLEUM REFINING PROCESSES

CHAPTER 8.7

CHEVRON LUMMUS GLOBAL EBULLATED BED BOTTOM-OF-THE-BARREL HYDROCONVERSION (LC-FINING) PROCESS

Avinash Gupta
Chevron Lummus Global
Bloomfield, New Jersey

INTRODUCTION

Ongoing trends in the petroleum refining industry have resulted in the need to upgrade bottom-of-the-barrel heavy oils that otherwise are difficult to transport and market due to their high viscosity and high levels of contaminants, such as sulfur, metals, asphaltenes, carbon residues, and solid particles. Petroleum refiners find it necessary to process heavier crudes that require deep residual conversions to produce clean, high-quality finished products. The LC-Fining residual hydroconversion process was developed to specifically target hydrocracking the world's most difficult, heavy, lower-value hydrocarbon streams (petroleum residuals, heavy oils from tar sands, shale oils, solvent-refined coal extracts, etc.) at conversion levels of 80 percent and higher.

Increasing demand for light and middle distillates, as well as changing environmental regulations and specifications for fuel oil production, has further increased the need for more efficient residuum upgrading processes. The LC-Fining process, when coupled with an integrated, fixed-bed, wide-cut hydrotreater/hydrocracker, produces high-quality finished products without significant quantities of undesirable by-products.

Earlier heavy vacuum residual technologies (carbon rejection or hydrogen addition type) were generally limited to distillate yields of 40 to 60 percent. The remaining unconverted bottoms were used as coke, low-BTU gas, or residual fuel oil.

A major process route for coping with these challenges is residue hydrocracking. This process is characterized by both thermal cracking and hydrogenation reactions whereby the heavy, hydrogen-deficient components in the feed are converted to lighter products. The LC-Fining process is a commercially proven hydrocracking process for the upgrading of residues.

Downloaded from Digital Engineering Library @ McGraw-Hill (www.digitalengineeringlibrary.com)
Copyright © 2004 The McGraw-Hill Companies. All rights reserved.
Any use is subject to the Terms of Use as given at the website.

CHEVRON LUMMUS GLOBAL EBULLATED BED BOTTOM-OF-THE-BARREL
HYDROCONVERSION (LC-FINING) PROCESS

Residual upgrading process requirements should include the ability to (1) handle high heats of reaction without wasting reactor volume, (2) handle extraneous material without plugging, (3) provide uniform distribution of reactants and efficient contacting, and (4) operate over extended periods without shutdown. The nature of the LC-Fining process makes it ideally suited for the conversion of residues to lighter, more valuable products. The process can be tailored for the feedstocks, the degree of conversion, and the product qualities required, especially the production of high-quality residual fuel oil with low sulfur content and good pipeline stability, or high-quality synthetic crude oils.

The LC-Fining process is based on technology initially developed and commercially demonstrated by Cities Service, and subsequently improved and refined by ABB Lummus Global, BP (formerly Amoco Oil Company), and ChevronTexaco Corp. (formerly Chevron). With this process, heavy oil feeds—including gas oils, petroleum atmospheric and vacuum residue, coal liquids, asphalt, bitumen from tar sands, and shale oil—are hydrogenated and converted to a wide spectrum of lighter, more valuable products such as naphtha, light and middle distillates, and atmospheric and vacuum gas oils. Residual products can be used as fuel oil, synthetic crude, or feedstock for a coker, visbreaker, solvent deasphalter, or residual catalytic cracker. Operating conditions and catalyst type and activity can be varied to achieve the desired conversion, Conradson carbon reduction (CCR), desulfurization, and demetallization of residual oil feeds.

DEVELOPMENT AND COMMERCIAL HISTORY

From 1957 to 1975, Cities Service Research and Development Company participated with Hydrocarbon Research Institute (HRI) to pilot-test and develop an ebullated bed hydroconversion process (H-Oil). During this period, research and development programs were continually carried out in several pilot units. Based on the pilot tests, the first commercial unit was designed and operated at Lake Charles, Louisiana, in 1963.

In 1975, ABB Lummus Global (Lummus) joined together with Cities Service to license, market, design, and generally improve upon the technology from Cities Service. Pilot-plant facilities for this technology, called LC-Fining, were built in New Jersey. Lummus carried out comprehensive process pilot-plant studies and mechanical design developments and offered initial operation and process simulation services.

The first license was sold to Amoco Oil Company in 1981. Amoco operated the commercial plant in Texas City, conducted extensive pilot-plant and catalyst development work, and eventually became a joint licensor with Lummus in 1984. The Amoco unit started up quickly and performed well right from the beginning: All design targets were met or exceeded. To maximize profits, throughout its operation, the Amoco unit processed the optimum-priced crudes available based on the characteristics of the residual bottoms to be processed in the LC-Fining unit (i.e., high sulfur/high metals content feedstocks, including blends with over 40 percent Mexican Maya). Amoco installed its own LC-Fining pilot-plant facilities in 1980. Lummus was given access to much of the information from these pilot units as well as that from Syncrude Canada's pilot unit, which operated from 1988 to 1998.

Over many years, Lummus developed a large pilot-plant and commercial units database on various residual feeds from different geographic locations with a wide range of contaminant levels (metals, sulfur, nitrogen, CCR, asphaltenes, etc.). Some of these residual feeds included the world's most difficult, very heavy, lower-value hydrocarbon streams.

Lummus's pilot units were used to conduct many programs for design data development for various potential clients and the U.S. government. At one time, there were three

Downloaded from Digital Engineering Library @ McGraw-Hill (www.digitalengineeringlibrary.com)
Copyright © 2004 The McGraw-Hill Companies. All rights reserved.
Any use is subject to the Terms of Use as given at the website.

CHEVRON LUMMUS GLOBAL EBULLATED BED BOTTOM-OF-THE-BARREL HYDROCONVERSION (LC-FINING) PROCESS

ebullated bed pilot plants operating continuously in addition to mini-stirred autoclave test facilities. Many of the Middle Eastern, Mexican, Venezuelan, western Canadian, southeastern Asia, Russian, and U.S. reduced crudes and vacuum bottoms, solvent-refined coal extracts, heavy oils from tar sands, and shale oils were processed in Lummus's pilot-plant facilities.

When the H-Oil process was developed, the initial goal was to process Athabasca bitumen for Cities Service Athabasca (now Syncrude Canada). Many of the pilot programs conducted from 1957 to 1972 were devoted to Athabasca bitumen. In the 1970s and 1980s Lummus also conducted numerous pilot runs on bitumen feeds for Syncrude.

In the early 1990s, an extensive pilot program was performed for Alberta Oil Sands Technology Research Administration (AOSTRA) in order to demonstrate Lummus's high conversion technology (LC-Fining) with Athabasca bitumen and other Alberta heavy crudes. During this work, the integrated hydrotreater was closely studied and piloted at conditions that could be applied commercially.

In 1990, a 70-day pilot-plant run was conducted on Arabian Heavy vacuum residue in Lummus's research facilities to support AGIP Petroli Raffineria di Milazzo's (RAM) commercial LC-Fining unit design. In this run, a series of test programs were conducted at varying operating conditions and using various feed diluents and cutter stocks. The primary objective of the run was to establish the reactor operating conditions and proper feed diluent blends that would permit the maximum level of conversion to be attained, consistent with meeting RAM's low-sulfur fuel oil requirements. The commercial unit, commissioned in September 1998, has been running with an on-stream time in excess of 96 percent while producing 1 wt % sulfur stable fuel oil.

In 1995, Russian vacuum residual supplied by Slovnaft for its refinery in Bratislava, Slovakia, was processed in Lummus's pilot-plant facility at conversion levels ranging from 60 to 88 vol %. For operations at higher conversion levels, an aromatic solvent (heavy cycle oil) was used with the vacuum residual, using high-HDS and low-sediment activity catalysts. This catalyst was superior to the standard LC-Fining catalyst tested in earlier runs in terms of sediment control and hydrodesulfurization (HDS) and CCR activity. The objective of this pilot run was to establish the reaction yields and product qualities to be used in the design and guarantees for Slovnaft's commercial LC-Fining unit. The Slovnaft plant is similar to the RAM unit and has been successfully operating since 2000.

In 2000, Lummus and Chevron joined forces to jointly develop and market the residual upgrading technologies of both companies—including the LC-Fining process—under a single entity, Chevron Lummus Global LLC (CLG).

In 1999 and 2000, two LC-Fining pilot plant runs were conducted at CLG's facilities to support Shell Canada's and Petro-Canada's commercial LC-Fining units design efforts. During the Shell Canada run, a close-coupled, online, integrated, wide cut distillate, fixed-bed hydrotreater was also tested. In addition, off-line hydrotreating tests were performed to replicate the inhibition effects of H_2S and NH_3 expected in commercial operation.

Under a joint cooperative agreement, CLG and AGIP Petroli conducted several pilot-plant runs in the LC-Fining pilot-plant facility at AGIP's research center related to process optimization/ development and catalyst screening programs for RAM, Shell Canada, and Petro-Canada. The long-term goals of this joint effort are to extend the database, further enhance the correlations and models, test new process designs (e.g., interstage separator/stripper, optimize quantity and interstage injection location of aromatic diluents), and continue to screen and evaluate new residual conversion catalysts.

CLG has built and is building several small pilot units at Chevron's research facilities in Richmond, California to support its residual upgrading technologies: ARDS, VRDS, OCR, upflow reactor (UFR), and LC-Fining.

Downloaded from Digital Engineering Library @ McGraw-Hill (www.digitalengineeringlibrary.com)
Copyright © 2004 The McGraw-Hill Companies. All rights reserved.
Any use is subject to the Terms of Use as given at the website.

CHEVRON LUMMUS GLOBAL EBULLATED BED BOTTOM-OF-THE-BARREL
HYDROCONVERSION (LC-FINING) PROCESS

PROCESS CHEMISTRY

Residual hydrocracking is accomplished at relatively high temperatures and high pressures in the presence of hydrogen and a residual conversion catalyst to hydrogenate the products and prevent polymerization of the free radicals as cracking reactions proceed. The catalyst consists of a combination of metals that promote hydrogenation (e.g., cobalt and molybdenum, or nickel and molybdenum) deposited on an alumina base.

The two most important reactions that take place in residual hydrocracking are thermal cracking to lighter products and catalytic removal of feed contaminants. These reactions generally require operating temperatures between 750 and 850°F, hydrogen partial pressures from 1100 to 2200 lb/in^2, and space velocities ranging from 0.1 to 0.8 (vol oil/h)/vol of reactor.

Hydrocarbons present in the residual are generally classified as oils, resins, and asphaltenes. Typical residual may contain about 20 percent oils, 65 percent resins, and 15 percent asphaltenes. The asphaltenes are the high-molecular-weight material in the residual that typically contains a large concentration of sulfur, nitrogen, metals, Conradson carbon, and highly condensed polynuclear aromatics.

Nitrogen removal is generally much more difficult than sulfur removal. Some nitrogen compounds in the cracking reactions are merely converted to lower-boiling-range nitrogen compounds rather than being converted to NH_3.

The highest concentration of metals (V and Ni) resides in the asphaltene fraction with some in the resin fraction. The oil fraction tends to be nearly free of metals. Metals are removed as metal sulfides. Unlike sulfur and nitrogen, which are converted and "escape" as H_2S and NH_3, the vanadium and nickel removed are absorbed on the catalyst. These metals are known to plug the catalyst pores, and this pore blockage results in catalyst deactivation.

The conversion of Rams carbon is economically important if LC-Fining vacuum bottoms are fed to a downstream coking unit. A lower-Rams-carbon-content residual product to the coking unit means less coke make and thus a higher yield of liquid fractions that can subsequently be converted to transportation fuels. Another option to limit the coke make in the downstream coking unit is to maximize the pitch conversion at the LC-Fining residual hydrocracker.

Residual Conversion Limits

There are many factors that affect the sediment formation rate and consequently the reactor operability and residual conversion limits, including

- Residual asphaltene content
- CCR reactivity
- Thermal severity (conversion)
- Catalyst type and activity
- Hydrogen partial pressure
- Type and quantity of diluents
- Residual resin content
- Reactor temperature

Of these, the first six have the greatest influence. Many pilot-plant tests showed that sediment formation is directly proportional to the asphaltene content of the feed and inversely proportional to the CCR reactivity.

Downloaded from Digital Engineering Library @ McGraw-Hill (www.digitalengineeringlibrary.com)
Copyright © 2004 The McGraw-Hill Companies. All rights reserved.
Any use is subject to the Terms of Use as given at the website.

CHEVRON LUMMUS GLOBAL EBULLATED BED BOTTOM-OF-THE-BARREL HYDROCONVERSION (LC-FINING) PROCESS

Coke Precursor/Organic Sediment Formation

The nature and origin of the coke precursors are often not precisely known. However, a mechanism of sediment (i.e., coke precursor) formation in processes that involve thermal cracking in addition to hydrocracking and hydrogenation, such as the LC-Fining process, has been generally postulated as described by the following reaction chemistry.

Thermal cracking—formation of free radicals

$$R - R \rightarrow R^* + R^*$$

Free radicals react to form olefins or asphaltenes:

$$R - CH_2 - CH_2^* \rightarrow R - CH = CH_2 + H^*$$

$$R^* + R' \rightarrow R - R'$$

Termination or recapping of free radicals by hydrogenation

$$R^* + H^* \rightarrow R - H$$

At elevated temperatures, thermal cracking reactions generate free-radical species due to the rupture of carbon-carbon bonds. The free radicals may react with hydrogen in the presence of the catalyst to form stable products. This reaction predominates in the LC-Fining process where high hydrogen partial pressures are always maintained. If proper conditions are not maintained, the free radicals may also combine with other free radicals to form higher-molecular-weight free radicals. This chain reaction can continue until very high-molecular-weight, insoluble species (coke precursors/sediments) are produced. As the temperature is increased to obtain higher conversions, the rate of generation of free radicals, and consequently coke precursors, can increase, creating phase separation and potential instability in the reactor if it is allowed to exceed the solubility limit.

Means of Controlling Coke Precursors/Organic Sediments

Control of coke precursors (organic sediments) can be accomplished in three ways: (1) Their formation is minimized or eliminated by using extremely high hydrogen partial pressures or very active catalyst; (2) the coke precursors are maintained in solution by adding aromatic diluents; and/or (3) the coke precursors are removed from the system.

The catalyst used in the LC-Fining process has an excellent ability to control the formation of these coke precursors, and aromatic diluents have been used successfully.

The continuous, physical removal of coke precursors (via filtration, centrifugation, etc.) from the reactor loop can be accomplished by bottoms recycle and removal of the coke precursors from the recycle stream, an approach pilot-tested and patented by Lummus for high conversion LC-Fining.

Catalyst Deactivation

The rate at which a catalyst deactivates during residual oil hydrocracking is a complex function of many parameters that can be categorized into three distinct classes. The first consists of the physical and chemical properties of the residual feedstock to be processed. The second is concerned with the nature of the catalyst itself. The third is the effect of the

Downloaded from Digital Engineering Library @ McGraw-Hill (www.digitalengineeringlibrary.com)
Copyright © 2004 The McGraw-Hill Companies. All rights reserved.
Any use is subject to the Terms of Use as given at the website.

CHEVRON LUMMUS GLOBAL EBULLATED BED BOTTOM-OF-THE-BARREL
HYDROCONVERSION (LC-FINING) PROCESS

operating conditions used to obtain the desired levels of conversion and desulfurization (temperature, space velocity, hydrogen partial pressure, etc.).

The most significant causes of catalyst deactivation are metals and carbon laydown. Concurrent with the desulfurization of residuals is a demetallization reaction. Residual cracking products have nickel and vanadium contents markedly lower than those in the feed to the unit. The metals accumulate on the catalyst, causing deactivation. It has been proposed that the organometallics simply block the outer physical surface of the catalyst.

Carbon laydown on catalyst is influenced by feedstock characteristics and conversion severity. Carbon accumulation is high in all operating scenarios, ranging from slightly under 10 wt % for low-temperature hydrodesulfurization of atmospheric residuum to over 40 wt % for high conversion of vacuum bottoms.

Residual hydrocracking is apparently diffusion-controlled. It has been found that $^1/_{32}$ in catalyst performs better than $^1/_{16}$ in catalyst.

LC-FINING REACTOR

Following is a schematic of an ebullated bed LC-Fining reactor (Fig. 8.7.1). Fresh feed and hydrogen enter the reactor at the bottom and pass up through a catalyst bed where hydrodesulfurization and other cracking and hydrogenation reactions occur. A portion of the product at the top of the reactor is recycled by means of an internally mounted recycle pump. This provides the flow necessary to keep the catalyst bed in a state of motion somewhat expanded over its settled level (i.e., ebullated). The catalyst level is monitored and controlled by radioactive density detectors, where the source is contained inside the reactor and the detectors are mounted outside. Temperature is monitored by internal couples and skin couples. The performance of the ebullated bed is continuously monitored and controlled with the density detectors and temperature measurements that verify proper distribution of gas and liquid throughout the catalyst bed. Temperature deviations outside the normal expected ranges that might suggest maldistribution will cause the distributed control system (DCS) to activate alarms or initiate automatic shutdown on the heaters, hydrogen feed, and/or reactor section, as required.

Catalyst is added and withdrawn while the reactor is in operation. The reactors can be staged in series, where the product from the first reactor passes to a second reactor and, if necessary, to a third reactor. After the final reactor, the product goes to a high-pressure/high-temperature separator.

LC-FINING PROCESS FLOW SCHEMATICS

Process Description

Following is a simplified process flow diagram of an LC-Fining unit with a close-coupled, integrated, fixed-bed hydrotreater/hydrocracker (Fig. 8.7.2).

Oil feed and hydrogen are heated separately, combined, and then passed into the hydrocracking reactor in an upflow fashion through an ebullated bed of catalyst. Under the effects of time, temperature, and hydrogen pressure, and aided by the catalysts, the feed oil is cracked and hydrogenated to produce lighter, higher-quality products. A portion of the liquid product from the large pan at the top of the reactor is recycled through the central downcomer by means of a pump mounted in the bottom head of the reactor. This flow gives the needed velocity for bed expansion and aids in maintaining near-isothermal reactor temperature.

Downloaded from Digital Engineering Library @ McGraw-Hill (www.digitalengineeringlibrary.com)
Copyright © 2004 The McGraw-Hill Companies. All rights reserved.
Any use is subject to the Terms of Use as given at the website.

CHEVRON LUMMUS GLOBAL EBULLATED BED BOTTOM-OF-THE-BARREL
HYDROCONVERSION (LC-FINING) PROCESS

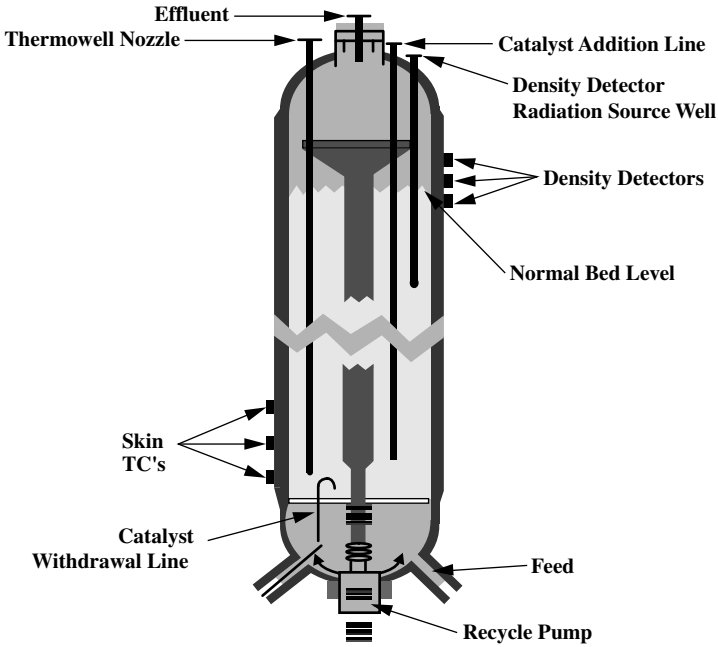

FIGURE 8.7.1 LC-Fining reactor.

The hydrocracking reactions are exothermic, resulting in a temperature rise from inlet to outlet depending upon the reaction operating severity. However, because of the mixing effect of the internal recycle liquid, the bed operates essentially isothermally. Catalyst is added and withdrawn batchwise to maintain an equilibrium catalyst activity without the need for unit shutdown.

Reactor products flow to the high-pressure/high-temperature separator. Vapor effluent from the separator is let down in pressure before heat exchange, removal of condensates, and purification. Handling the recycle gas at low pressure offers considerable savings in investment over the conventional high-pressure recycle gas purification system.

After stripping, the recycle liquid is pumped through the coke precursor removal step (a physical means of separation such as centrifugation) where very small quantities of insoluble heavy hydrocarbons or carbonaceous solids are removed. The clean liquid recycle then passes to the suction drum of the feed pump. Net product from the top of the recycle stripper goes to fractionation; net heavy oil product is directed from the stripper bottoms pump discharge to vacuum fractionation.

The LC-Fining reactor effluent vapor, along with distillate recovered from the heavy oil stripper overhead, any virgin atmospheric gas oil recovered in the prefractionator upstream of the LC-Fining unit, and vacuum gas oil recovered in the LC-Fining vacuum fractionator, is all charged to a "wide-cut," close-coupled, integrated, fixed-bed hydrotreater/hydrocracker located immediately downstream from the last ebullated bed LC-Fining reactor. The inlet temperature to the first bed is controlled by adjusting the amount of heat extracted from the LC-Fining reactor vapor stream, and the temperature of the distillate liquid is controlled by a combination of hydrogen and liquid quench. The effluent from the hydrotreating reactors is separated into a vapor and heavy distillate liquid stream, with the

Downloaded from Digital Engineering Library @ McGraw-Hill (www.digitalengineeringlibrary.com)
Copyright © 2004 The McGraw-Hill Companies. All rights reserved.
Any use is subject to the Terms of Use as given at the website.

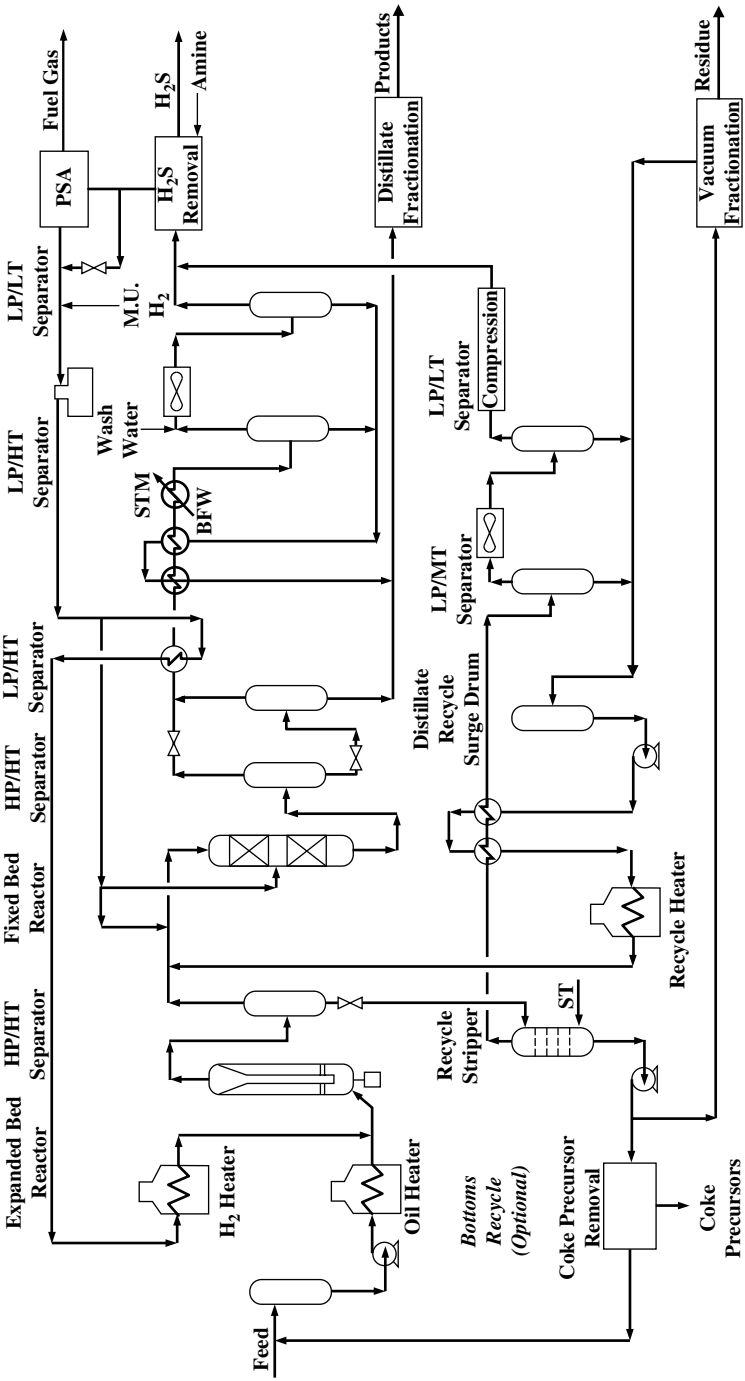

FIGURE 8.7.2 Process flow sketch—LC-fining unit with integrated distillate hydrotreating (LP recycle gas system).

Downloaded from Digital Engineering Library @ McGraw-Hill (www.digitalengineeringlibrary.com)
Copyright © 2004 The McGraw-Hill Companies. All rights reserved.
Any use is subject to the Terms of Use as given at the website.

CHEVRON LUMMUS GLOBAL EBULLATED BED BOTTOM-OF-THE-BARREL HYDROCONVERSION (LC-FINING) PROCESS

liquid stream routed to the hydrotreated distillate fractionator. The vapor stream is amine-treated, purified through a pressure swing absorption (PSA) or membrane unit, and recompressed and recirculated as treat gas to the LC-Fining reactors.

The high-conversion (>80 percent) LC-Fining process differs from the basic process in that bottoms recycle is practiced. The recycle liquid is let down in pressure and passes to the recycle stripper where it is fractionated to the proper boiling range for return to the reactor. In this way, the concentration of bottoms in the reactor, and therefore the reaction products slate, can be controlled.

LC-FINING TECHNOLOGY ADVANTAGES

Several advances in the LC-Fining residual hydroconversion technology have significantly reduced the capital investment and have further extended the conversion limits and processing limitations. These include

- H_2 purification systems
- Low treat gas rates
- Integrated hydrotreating/hydrocracking
- Interreactor separator/stripper
- Modified recycle pan
- Vacuum bottoms recycle
- Reactor bottom head distributor
- Improved reactor distributor design

H_2 Purification Systems

One of the key areas of process optimization resulted in the H_2 purification system. In early designs (Amoco), a lean oil system was used to purify the recycle gas, and the maximum purity achievable was 82 percent. In 1984, Lummus developed and patented a low-pressure H_2 purification system, which has been utilized in all commercial operating units since. With low-pressure H_2 purification, the gas exiting the last reactor is immediately let down and cooled at low pressure and then purified in a PSA unit. This permits high hydrogen treat gas purities, generally exceeding 97 vol %. As a result, the treat gas circulation rates were reduced by 50 to 60 percent and the reaction system design pressure by 10 percent, while still satisfying the hydrogen partial pressure requirements. This change, in conjunction with replacing 12 high-pressure equipment services (including high-pressure exchangers and drums; high-pressure lean oil and amine absorbers; and lean oil, amine, and wash water pumps) with low-pressure equipment, significantly reduced the LC-Fining unit investment cost. The only drawback with this low-pressure H_2 purification scheme (i.e., using a PSA system) is that the recycle gas had to be recompressed from low pressure back to reactor operating pressure, requiring an increase of 25 to 30 percent in the overall power consumption.

In 1998, the use of membranes was evaluated for purification of the recycle gas, and similar treat gas purities were achieved with membranes as with a PSA system. Membranes allow the same reduced reaction system pressure and lower treat gas circulation rates as with a PSA unit, but with the added benefit that the purified recycle gas is available at higher pressures. Consequently, the recycle gas can be recompressed in a sin-

Downloaded from Digital Engineering Library @ McGraw-Hill (www.digitalengineeringlibrary.com)
Copyright © 2004 The McGraw-Hill Companies. All rights reserved.
Any use is subject to the Terms of Use as given at the website.

CHEVRON LUMMUS GLOBAL EBULLATED BED BOTTOM-OF-THE-BARREL HYDROCONVERSION (LC-FINING) PROCESS

gle stage of compression versus the two or three stages of compression required with a PSA system, resulting in a 20 percent reduction in the overall unit power consumption. In addition, based on current high-pressure equipment pricing, the unit investment is slightly less with membranes than with a PSA unit.

Low Treat Gas Rates

By using high-purity recycle gas, it is possible to achieve the desired hydrogen partial pressure with much lower hydrogen treat gas rates. The low gas rates have two primary benefits: They greatly reduce unit investment associated with the heating, cooling, purification, and recompression of the recycle hydrogen; and they significantly reduce the gas superficial velocity and therefore the gas holdup in the reactor. This provides for greater liquid residence time per unit reactor volume, thereby reducing the reactor volume required to achieve the desired thermal conversion and catalytic contaminants removal. Conversely, when designing to a maximum allowable superficial gas velocity within a specified reactor diameter constraint, it is possible to substantially increase the LC-Fining unit capacity.

Reduced gas rates enhance overall reactor operation since internal liquid recirculation is increased as a result of the reduced gas superficial velocity and holdup. This results in better back-mixing of liquid and catalyst within the reactor, thereby minimizing incidences of catalyst bed slumping and channeling and flow maldistribution. The use of low treat gas rates is seen in all commercially operating LC-Fining units, which operate with a total hydrogen/chemical hydrogen ratio of 2.5:3.

Integrated Fixed-Bed Hydrotreater/Hydrocracker

Several recent designs incorporated a close-coupled, integrated, fixed-bed hydrotreater/hydrocracker immediately downstream of the LC-Fining reactors. In this design, the vapor stream from the LC-Fining reactors, the distillate recovered from the heavy oil stripper overhead, and the straight-run atmospheric and vacuum gas oils are fed to a wide-cut, fixed-bed hydrotreater/hydrocracker operating at essentially the same pressure level as the LC-Fining reactors.

Excess hydrogen contained in the LC-Fining reactor effluent vapor is used to hydrotreat the distillate fractions. Additional hydrogen, equivalent only to the chemical hydrogen consumed in the fixed-bed reactor, is introduced as quench to the second and third catalyst beds. If necessary, the remaining portion of the reaction heat is dissipated by injecting liquid quench recycled from the separator downstream of the hydrotreater/hydrocracker.

LC-Fining reactor effluent vapor is first contacted with VGO in a wash tower in order to remove any potential residual entrainment and entrainment of catalyst fines into the fixed-bed reactor. To maintain the desired HDS/HDN fixed-bed catalyst activity over the run length, a certain percentage of demetallization catalyst is included on the top of the first bed to remove metals and CCR contained in the hydrotreated feed fraction. Residual carryover is mitigated by providing additional surge upstream and by having spare (i.e., redundant) upstream separator and wash tower level control systems.

By incorporating the fixed-bed hydrotreater within the LC-Fining reaction system, the HP system service count is reduced from approximately 14 pieces (for a stand-alone hydrotreater) to only 6. In addition, since excess hydrogen in the LC-Fining reactor effluent vapor is used to hydrotreat the straight-run and LC-Fining distillate fractions, the need for additional recycle gas compression is eliminated. As a result, the investment is significantly reduced compared to that for a stand-alone hydrotreater/hydrocracker.

Downloaded from Digital Engineering Library @ McGraw-Hill (www.digitalengineeringlibrary.com)
Copyright © 2004 The McGraw-Hill Companies. All rights reserved.
Any use is subject to the Terms of Use as given at the website.

CHEVRON LUMMUS GLOBAL EBULLATED BED BOTTOM-OF-THE-BARREL
HYDROCONVERSION (LC-FINING) PROCESS

Interreactor Separator/Stripper

Recently proposed process design configurations incorporate the use of an interreactor separator/stripper, which permits higher liquid capacities to be achieved for a given reactor cross section. Gas superficial velocities through the downstream reactors are reduced by separating the vapor between reaction stages and routing the vapor to the final reactor effluent separator. This design provides for parallel flow of gas to each reaction stage while maintaining the benefits of series flow liquid operations. In a conventionally designed unit, the effluent vapor from the upstream reactor is combined with additional treat/quench gas, and all the vapor is directed to the downstream reactors. It is possible to process much higher feed throughputs to the LC-Fining unit for a given reactor cross-sectional area.

The reduction in stripped feed to the second-stage reactor and the associated increase in residual concentration enable reactor volume to be reduced for a given capacity and conversion, while the higher final-stage hydrogen partial pressure can be utilized to reduce either the catalyst addition rate or the reactor operating/design pressure. More important, the reduction in the paraffinic naphtha and light distillate fractions in the more highly converted third-stage liquid reduces the sediment formation for a given residual conversion. The residual conversion limits can be further extended due to this change in liquid composition.

Liquid Recycle Pan

A modified, two-stage, liquid recycle pan design, which increased conversion in the reactor and minimized upsets associated with the recycle pump bed expansion system, was put in operation at Amoco in 1986 and at Syncrude in 1988. The design operated with a more quiescent zone in and above the pan than the original version, minimizing the entrainment of gas bubbles into the recycle fluid, which in turn minimized gas holdup in the reactor. With this modification at Syncrude's LC-Fining unit, the conversion increased approximately 4 percent for the same reactor operating conditions.

Subsequently, Amoco and Syncrude, with Lummus's participation, developed a new pan design aimed at permitting operation at still higher capacities and treat gas rates. Following the installation of this new pan at Syncrude in 1996, Syncrude has been able to charge 58,000 BPSD of 650°F+ A-tar (unit originally designed for 40,000 BPSD), at similar reactor gas inlet superficial velocities, while achieving a 975°F+ conversion of 57 to 58 vol %. Thus, the installation of this new pan increased conversion an additional 2 to 3 vol %.

Bottom Head Feed Distributor

Based on cold flow modeling work done by Amoco in 1985/1986, a bottom head feed distributor was added to the LC-Fining reactors. It provides for better mixing of the feed oil, gas, and recycle oil while providing for better distribution of oil and gas to the cap and riser assembly.

Reactor Distributor Design

The primary reactor grid distributor is a bubble cap type with slotted risers for distribution of vapor and liquid to each cap. Each riser contains a seat and ball to prevent back-migration of catalyst below the grid into the reactor bottom head, should the recycle pump stop. The seat contains a small V notch to permit oil to be drained from the reactor.

Downloaded from Digital Engineering Library @ McGraw-Hill (www.digitalengineeringlibrary.com)
Copyright © 2004 The McGraw-Hill Companies. All rights reserved.
Any use is subject to the Terms of Use as given at the website.

CHEVRON LUMMUS GLOBAL EBULLATED BED BOTTOM-OF-THE-BARREL
HYDROCONVERSION (LC-FINING) PROCESS

Amoco performed substantial cold flow modeling of the distributor grid that led to the installation of catalyst slides. This was found to reduce instances of localized catalyst settling near the wall, maintaining a cleaner reactor environment and increasing the run length between turnarounds.

Alternate grid modifications are being considered, such as using larger risers around the reactor perimeter and/or varying the riser slot heights to either increase the flow of both gas and liquid, or, preferentially, increase the flow of gas, at the reactor wall.

Vacuum Bottoms Recycle Operation without Coke Precursor Removal

Vacuum bottoms recycle (VBR) operations have been extensively pilot-tested, and VBR was found beneficial to

- Increase residual conversion
- Minimize hydrogen consumption
- Maximize yield of vacuum gas oil
- Minimize light ends (C_1-C_3, gas) make
- Maximize unit capacity for a given level of conversion and reactor volume

The most significant advantage of VBR operation is the increase in residual conversion at the same operating severity. With VBR, the residual concentration increases within the reactors, thereby increasing the conversion rate.

VBR does have some drawbacks. The operating company may prefer the higher yield of lighter distillates realized without recycle. Recycle is a form of back-mixing and can result in higher impurities in the product. Recycle of vacuum bottoms at higher temperatures is ineffective for control of sediment, as the sediment formation can rise rapidly, creating potential difficulties for maintaining proper catalyst bed ebullition.

COMMERCIAL OPERATIONS

Residue hydroconversion units that utilize the ebullated bed LC-Fining technology are summarized in Table 8.7.1. Shell Canada is scheduled to start up in 2003 and Petro-Canada around 2005.

PROCESS FLEXIBILITY

The LC-Fining unit has great inherent flexibility to meet variations in feed quality/throughput, product quality, and reaction operating severities (temperature, space velocity, conversion, etc.). This flexibility is a direct result of the ebullated catalyst bed reactor system. In an ebullated bed unit, if the metals or sulfur content of the feed increases, the product quality is maintained by increasing catalyst consumption. Conversely, the catalyst consumption is reduced if the feed quality improves.

BP has utilized this flexibility to process heavy sour vacuum bottoms from a blend of different crudes, including Maya and Bachequero. At the same time, BP has increased conversion of vacuum bottoms to distillate to 75 to 80 percent typically, at full feed rate, and up to 92 percent at reduced feed rates. The original design was 60 percent at full feed rate.

Downloaded from Digital Engineering Library @ McGraw-Hill (www.digitalengineeringlibrary.com)
Copyright © 2004 The McGraw-Hill Companies. All rights reserved.
Any use is subject to the Terms of Use as given at the website.

TABLE 8.7.1 LC-Fining Commercial Units

Unit	BP	Syncrude	AGIP	Slovnaft	Shell Canada	Petro-Canada
Feed	Vacuum residual	Athabasca bitumen	Vacuum residual	Vacuum residual	A-Tar, vacuum residual	A-Tar, vacuum residual
Capacity, BPSD	75,000	40,000	25,000	23,000	80,000	50,000
Process goal	Produce distillates	Produce synthetic crude	Produce diesel oil and FCC feed	Produce maximum FCC feed	Produce synthetic crude oil (SCO) and stable heavy oil	Obtain maximum conversion to distillates
Residual conversion, vol %	75–80	65	65–80	65	77	75
LC-Fining bottoms utilization	Produce low-sulfur fuel oil Produce feed for delayed coker	Produce a reduced CCR feed to fluid coker	Produce high-quality, low-sulfur No. 6 fuel oil	Produce low-sulfur No. 6 fuel oil	Produce moderate-sulfur stable heavy product	Produce delayed coker feed
H_2 purification system pressure	High	Low	Low	Low	Low	Low

Downloaded from Digital Engineering Library @ McGraw-Hill (www.digitalengineeringlibrary.com)
Copyright © 2004 The McGraw-Hill Companies. All rights reserved.
Any use is subject to the Terms of Use as given at the website.

CHEVRON LUMMUS GLOBAL EBULLATED BED BOTTOM-OF-THE-BARREL
HYDROCONVERSION (LC-FINING) PROCESS

The world's first ebullated bed residual upgrader operated by Cities Service Oil Company utilized this flexibility to process atmospheric bottoms, FCC heavy cycle oil, propane deasphalter bottoms, and vacuum bottoms.

The Syncrude unit was originally designed to process 500°F+ Athabasca bitumen containing 55 wt % 975°F+ vacuum residual. More recently, they installed a vacuum prefractionation system and are now processing a blend of atmospheric and vacuum bottoms containing 75 wt % 975°F+ vacuum residual.

Sufficient operating flexibility is also normally provided in the design to enable the unit to operate in the future with VBR, which provides for future options to increase either conversion or unit throughput.

TYPICAL RANGE OF OPERATING PARAMETERS

Reactor temperature	400–450°C (750–840°F)
Reactor pressure	100–200 atm (1500–3000 lb/in^2 gage)
Conversion, vol % 525°C+ (975°F+)	40–92 percent+
Hydrogen partial pressure	70–170 atm (1100–2500 lb/in^2 absolute)
Hydrogen consumption	120–340 N m^3/m^3 (700–2000 SCF B)
Desulfurization	60–95 percent
Demetallization	70–98 percent
CCR reduction	40–75 percent

WIDE RANGE OF FEEDSTOCKS

A wide range of heavy oils have been processed in LC-Fining units. For example, the BP unit handles many of the poorest-quality vacuum residual in the world, including Mexican, Venezuelan, and Middle Eastern. Feed typically is under 5° API and has more than 4 wt % sulfur and more than 400 ppm metals. Table 8.7.2 shows the major crudes processed by BP at Texas City to produce LC-Fining feedstock from 1984 to 1992.

Table 8.7.3 shows the BP unit operating results.

YIELDS AND PRODUCT QUALITY

LC-Fining unit product yields for processing Arabian heavy vacuum bottoms to conversion levels of 40, 65, and 80 percent are listed in Table 8.7.4. All these conversions can be achieved in the same LC-Fining unit, illustrating the great flexibility of the process.

The yield structure and product properties are estimated from generalized correlations that were derived from extensive pilot-plant and commercial data. Typical product properties for a 65 vol % conversion case are shown in Table 8.7.5.

Downloaded from Digital Engineering Library @ McGraw-Hill (www.digitalengineeringlibrary.com)
Copyright © 2004 The McGraw-Hill Companies. All rights reserved.
Any use is subject to the Terms of Use as given at the website.

CHEVRON LUMMUS GLOBAL EBULLATED BED BOTTOM-OF-THE-BARREL HYDROCONVERSION (LC-FINING) PROCESS

TABLE 8.7.2 Major Crudes Processed by BP at Texas City to Produce LC-Fining Feedstock, 1984 to 1992

Maya	Menemota	Djeno	Basrah Light
Hondo	Gulf of Suez Mix	Arab Medium	Basrah Heavy
Heavy Bachequero	Isthmus	Arab Heavy	Qua Iboe
Lloydminster	Alberta Light	Coban	Merey
Alaskan North Slope	Pilon	Cold Lake	Leona
West Texas C	Laguana	Peace River	Kuwait
Khafji	BCF-17	Yemen	Kirkuk
Jobo	Tia Juana Pesado	Olmeca	

Feedstock: Blend of Maya (over 40 percent), Venezuelan, Middle Eastern, domestic including ANS, and other vacuum bottoms.

TABLE 8.7.3 BP Unit Operating Results

Performance Maximum*	
Conversion, %	80+
Sulfur removal, %	83+
Carbon residue, %	65+
Days on-stream to turnaround	1095
Percentage Maya bottoms	43

*Items in this column were at different times.

TABLE 8.7.4 Typical LC-Fining Unit Product Yields

Crude source:	Arabian heavy vacuum bottoms + catalytic cracker HCO			
	Conversion Level			
	40	40	65	80
Feed				
Gravity, °API	5.4			
Sulfur, wt %	4.7			
Nitrogen, wt %	0.35			
Ni/V, wt ppm	189			
CCR, wt %	20.8			
Product yields, vol %				
C_4	1.07	1.02	1.45	2.21
C_5–329°F	5.50	5.20	7.60	12.00
329–698°F	19.18	19.10	31.50	42.80
698–1022°F+	30.77	31.10	36.96	34.41
1022°F	48.00	48.00	28.00	16.00
Total	104.52	104.32	105.51	107.41
1022°F+ sulfur, wt %	1.2	1.6	1.6	2.3
Hydrogen consumption, SCF B fresh feed	942	870	1239	1590

Downloaded from Digital Engineering Library @ McGraw-Hill (www.digitalengineeringlibrary.com)
Copyright © 2004 The McGraw-Hill Companies. All rights reserved.
Any use is subject to the Terms of Use as given at the website.

CHEVRON LUMMUS GLOBAL EBULLATED BED BOTTOM-OF-THE-BARREL HYDROCONVERSION (LC-FINING) PROCESS

TABLE 8.7.5 LC-Fining Unit Product Properties

	Arabian heavy 65 vol % conversion			
Boiling range, °F	C_5–329	329–698	698–1022	1022+
Wt % on feed	5.27	26.50	33.71	28.25
Vol % on feed	7.60	31.50	36.95	28.00
Gravity, °API	61.2	31.2	19.0	4.6
Sulfur, wt %	0.01	0.11	0.53	1.6
Nitrogen, wt %	0.02	0.08	0.19	0.45
Aniline point, °F		122	163	
Cetane index		41		
Conradson carbon, wt %				26.3
Metals: Vanadium, wt ppm				48
Nickel, wt ppm				26
Viscosity, CST @ 74°F		4.6		
210°F		1.2	7.8	
300°F			3.1	70
350°F				30
C_7, Asphaltenes, wt %				9.3

CATALYSTS

A series of catalysts are available for use in LC-Fining units. The first-generation catalysts in commercial use had adequate HDM/HDS activity with acceptable sediment levels. These were less expensive than more recently developed, enhanced contaminant removal/sediment control catalysts. New-generation catalysts are needed to produce low-sulfur fuel oils (from vacuum bottoms) of 1 wt % sulfur or less with minimum sediment levels (≤0.15 wt %) for pipeline stability. The other requirement of a good LC-Fining catalyst is to maintain improved reactor operability/stability at high-temperature/high-residual conversions.

The residual hydroprocessing catalysts are small ($^1/_{32}$ to $^1/_8$ in), extruded, cylindrical pellets made from an aluminum base. The pellets are impregnated with active metals (Co, Ni, Mo, W, and other proprietary materials) that have good hydrogenation, demetallation, desulfurization, and sediment control activity. Catalyst manufacturing processes are tailored to manipulate physical and mechanical properties such as size (length and diameter), attrition resistance, crush strength, pore size distribution, pore volume, and effective surface area. Catalytic performance is affected by the complicated nature of the "active site" and dispersion and distribution of activators and promoters.

Pore size control and distribution are key factors in the behavior and formulation of residual conversion catalysts. The pore sizes need to be sufficiently large to allow the diffusion of the large residual/asphaltene molecules that require upgrading. Unfortunately as the pore diameter increases, the surface area and the hydrogenation activity decrease. The diffusion of large molecules is reduced further because of pore mouth plugging due to carbon laydown and metal sulfide buildup from vanadium and nickel atoms that are removed from the residual feed. Metal sulfides are formed from the oxidative state of the catalyst in the LC-Fining reactor environment (presulfiding reactions with sulfur in heavy oils, etc.).

Catalysts are also optimized for specific functions—such as metals removal, sulfur removal, carbon residue reduction, and high conversion—while maintaining a clean product low in organic sediments. The catalyst system developed by BP for its LC-Fining unit at Texas City utilizes a proprietary demetallization catalyst in the first reactor and a high-activity nickel/Mo desulfurization catalyst in the second and third reactors.

Downloaded from Digital Engineering Library @ McGraw-Hill (www.digitalengineeringlibrary.com)
Copyright © 2004 The McGraw-Hill Companies. All rights reserved.
Any use is subject to the Terms of Use as given at the website.

CHEVRON LUMMUS GLOBAL EBULLATED BED BOTTOM-OF-THE-BARREL HYDROCONVERSION (LC-FINING) PROCESS

One of the key features of the LC-Fining process is the use of countercurrent catalyst addition to optimize catalyst usage. Fresh catalyst is added to the third reactor, then reused by withdrawing it and adding it to the second reactor. The catalyst can then be used a third time by withdrawing it from the second reactor and adding that material to the first reactor. Catalyst cascading results in higher overall kinetics rate constants and therefore better overall catalyst utilization based on the concentration of metals in the spent catalyst discharged from the first stage. This mode of addition and withdrawal has the added benefit of exposing the most highly converted residual to the most active catalyst. This reduces the sediment formation in the last reactor and thus allows reactor operability and conversion limits to be extended.

INVESTMENT COSTS

Compared to other residual hydrogenation processes, the LC-Fining process has several intrinsic advantages:

- Very high conversion levels
- Low investment cost
- Lower operating costs
- Lower hydrogen losses
- More efficient hydrogen and heat recovery
- Lower maintenance

Much of the cost of a hydrogenation unit is connected to the gas recycle rate; high gas recycle rate results in high compressor, piping, furnace, heat exchanger, and separator costs. The LC-Fining process is the lowest-cost commercially proven residual hydrogenation process due to the low total hydrogen rate and the proprietary low-pressure recovery system. The low-pressure recovery system saves 8 to 10 percent of the capital investment of an LC-Fining unit, which translates to $10 million to $30 million U.S. or more, depending on plant size. Gas losses are also maintained at a low level by using low hydrogen circulation rates.

When the integrated hydrotreater/hydrocracker is incorporated into the LC-Fining unit, additional savings in investment of as much as 40 percent of the cost of separate hydrotreating facilities are possible.

Depending on feedstock properties, operating severities, product requirements, and processing objectives, the typical ISBL investment cost of an LC-Fining unit ranges from $2000 to $5000 U.S. per BPSD.

Downloaded from Digital Engineering Library @ McGraw-Hill (www.digitalengineeringlibrary.com)
Copyright © 2004 The McGraw-Hill Companies. All rights reserved.
Any use is subject to the Terms of Use as given at the website.

Downloaded from Digital Engineering Library @ McGraw-Hill (www.digitalengineeringlibrary.com)
Copyright © 2004 The McGraw-Hill Companies. All rights reserved.
Any use is subject to the Terms of Use as given at the website.

Source: HANDBOOK OF PETROLEUM REFINING PROCESSES

P · A · R · T · 9

ISOMERIZATION

Downloaded from Digital Engineering Library @ McGraw-Hill (www.digitalengineeringlibrary.com)
Copyright © 2004 The McGraw-Hill Companies. All rights reserved.
Any use is subject to the Terms of Use as given at the website.

Downloaded from Digital Engineering Library @ McGraw-Hill (www.digitalengineeringlibrary.com)
Copyright © 2004 The McGraw-Hill Companies. All rights reserved.
Any use is subject to the Terms of Use as given at the website.

Source: HANDBOOK OF PETROLEUM REFINING PROCESSES

CHAPTER 9.1
UOP BENSAT PROCESS

Dana K. Sullivan
UOP LLC
Des Plaines, Illinois

The introduction of reformulated gasoline with mandated limits on benzene content has caused many refiners to take steps to reduce the benzene in their gasoline products. The major source of benzene in most refineries is the catalytic reformer. Reformate typically contributes 50 to 75 percent of the benzene in the gasoline pool.

The two basic approaches to benzene reduction involve prefractionation of the benzene and benzene precursors in a naphtha splitter before reforming, postfractionation in a reformate splitter of the benzene after it is formed, or a combination of the two (Fig. 9.1.1). The benzene-rich stream must then be treated to eliminate the benzene by using extraction, alkylation, isomerization, or saturation (Figs. 9.1.2 and 9.1.3).

If the refiner has an available benzene market, the benzene-rich stream can be sent to an extraction unit to produce petrochemical-grade benzene. Alkylation of the benzene may also be an attractive option if propylene is available, as in a fluid catalytic cracking (FCC) refinery. An isomerization unit saturates the benzene and also increases the octane of the stream by isomerizing the paraffins to a higher-octane mixture. Saturation in a stand-alone unit is a simple, low-cost option.

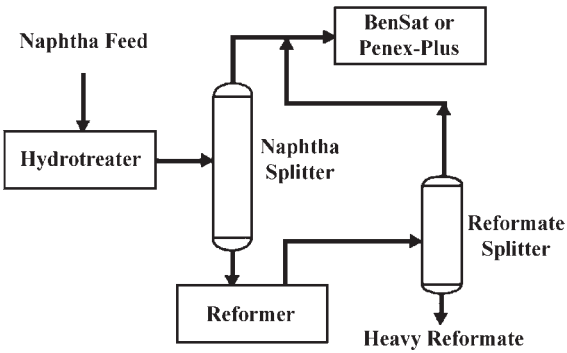

FIGURE 9.1.1 Fractionation for benzene reduction.

Downloaded from Digital Engineering Library @ McGraw-Hill (www.digitalengineeringlibrary.com)
Copyright © 2004 The McGraw-Hill Companies. All rights reserved.
Any use is subject to the Terms of Use as given at the website.

UOP BENSAT PROCESS

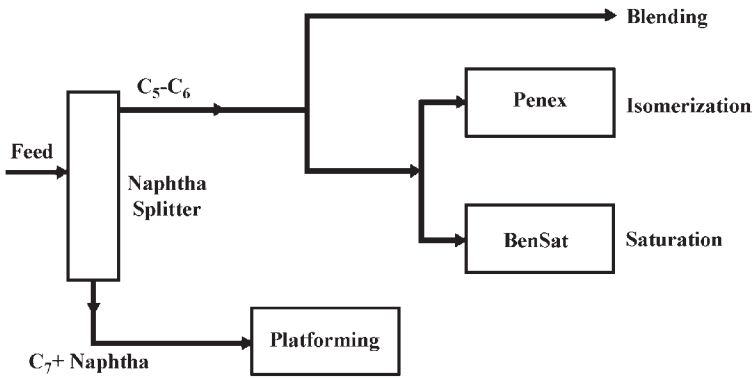

FIGURE 9.1.2 Prefractionation options.

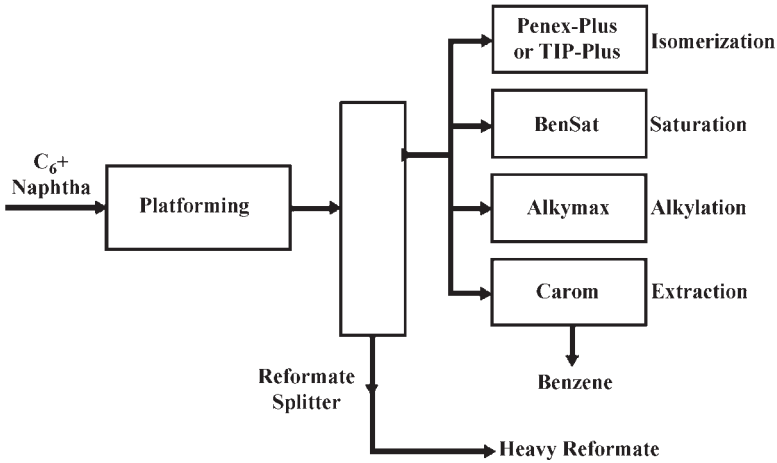

FIGURE 9.1.3 Postfractionation options.

PROCESS DISCUSSION

The UOP* BenSat* process was developed to treat C_5-C_6 feedstocks with high benzene levels. Because almost all the benzene is saturated to cyclohexane over a fixed bed of catalyst, no measurable side reactions take place. Process conditions are moderate, and only a slight excess of hydrogen above the stoichiometric level is required. The high heat of reaction associated with benzene saturation is carefully managed to control the temperature rise across the reactor. Product yield is greater than 100 liquid volume percent (LV %), given the volumetric expansion associated with saturating benzene and the lack of any yield losses from cracking to light ends.

*Trademark and/or service mark of UOP.

Downloaded from Digital Engineering Library @ McGraw-Hill (www.digitalengineeringlibrary.com)
Copyright © 2004 The McGraw-Hill Companies. All rights reserved.
Any use is subject to the Terms of Use as given at the website.

UOP BENSAT PROCESS

The product has a lower octane than the feed as a result of the conversion of the high-octane benzene into lower-octane cyclohexane. However, the octane can be increased by further processing the BenSat product in an isomerization unit, such as a UOP Penex unit (see Chap. 9.3).

PROCESS FLOW

The BenSat process flow is shown in Fig. 9.1.4. The liquid feed stream is pumped to the feed-effluent exchanger and to a preheater, which is used only during start-up. Once the unit is on-line, the heat of reaction provides the required heat input to the feed via the feed-effluent exchanger. Makeup hydrogen is combined with the liquid feed, and flow continues into the reactor. The reactor effluent is exchanged against fresh feed and then sent to a stabilizer for removal of light ends.

CATALYST AND CHEMISTRY

Saturating benzene with hydrogen is a common practice in the chemical industry for the production of cyclohexane. Three moles of hydrogen are required for each mole of benzene saturated. The saturation reaction is highly exothermic: the heat of reaction is 1100 Btu per pound of benzene saturated. Because the benzene-cyclohexane equilibrium is strongly influenced by temperature and pressure, reaction conditions must be chosen carefully.

The UOP BenSat process uses a commercially proven noble metal catalyst, which has been used for many years for the production of petrochemical-grade cyclohexane. The catalyst is selective and has no measurable side reactions. Because no cracking occurs, no appreciable coke forms on the catalyst to reduce activity. Sulfur contamination in the feed reduces catalyst activity, but the effect is not permanent. Catalyst activity recovers when the sulfur is removed from the system.

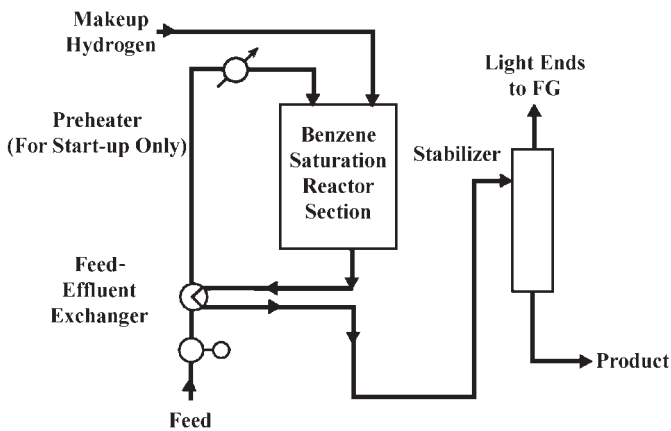

FIGURE 9.1.4 BenSat process flow.

Downloaded from Digital Engineering Library @ McGraw-Hill (www.digitalengineeringlibrary.com)
Copyright © 2004 The McGraw-Hill Companies. All rights reserved.
Any use is subject to the Terms of Use as given at the website.

UOP BENSAT PROCESS

FEEDSTOCK REQUIREMENTS

Light straight-run naphthas must be hydrotreated to remove sulfur. Light reformates usually have very low sulfur contents, and so hydrotreating may not be required. Any olefins and any heavier aromatics, such as toluene, in the feed are also saturated. Table 9.1.1 shows typical feedstock sources and compositions. The makeup hydrogen can be of any reasonable purity and is usually provided by a catalytic reformer.

COMMERCIAL EXPERIENCE

The estimated erected cost (EEC) for a light reformate, fresh-feed capacity of 10,000 barrels per stream day (BPSD) at a feed benzene level of 20 percent by volume is $5.6 million.

Estimated erected costs are inside battery limits, U.S. Gulf Coast open-shop construction (2002). The EEC consists of a materials and labor estimate; design, engineering, and contractor's fees; overheads; and expense allowance. The quoted EEC does not include such off-site expenses as cost and site preparation of land, power generation, electrical substations, off-site tankage, or marine terminals. The off-site costs vary widely with the location and existing infrastructure at the specific site. In addition, off-site cost depends on the process unit. A summary of utility requirements is shown in Table 9.1.2.

There are four BenSat units in operation. BenSat catalyst and technology are also used in four additional operating UOP Penex-Plus units.

TABLE 9.1.1 Typical Feed Compositions, LV %

		Light reformate	
Component	LSR	Light cut	Heartcut
C_5 paraffins	28	29	0
C_5 naphthenes	4	0	0
C_6 paraffins	35	34	47
C_6 naphthenes	17	3	3
C_7+	8	16	24
Benzene	8	18	26
Total	100	100	100

Note: LSR = light straight run.

TABLE 9.1.2 Utilities

Electric, kW	184
Medium-pressure steam, kg/h (klb/h)	7400 (16.3)
Condensate,* kg/h (klb/h)	7400 (16.3)
Cooling water, m^3/h (gal/min)	119.5 (526)

*Quantity exported.

Downloaded from Digital Engineering Library @ McGraw-Hill (www.digitalengineeringlibrary.com)
Copyright © 2004 The McGraw-Hill Companies. All rights reserved.
Any use is subject to the Terms of Use as given at the website.

Source: HANDBOOK OF PETROLEUM REFINING PROCESSES

CHAPTER 9.2
UOP BUTAMER PROCESS

Nelson A. Cusher
UOP LLC
Des Plaines, Illinois

INTRODUCTION

The first successful efforts in the research and development of catalytic systems for the isomerization of normal paraffins came in the early 1930s. The requirement for high-octane aviation gasoline during World War II accelerated the application of early isomerization research. Light olefinic hydrocarbons were available from the newly developed fluid catalytic cracking (FCC) process and from other mainly thermal operations. These olefinic hydrocarbons could be alkylated with isobutane (iC_4) to produce a high-octane gasoline blending component. However, the supply of isobutane from straight-run sources and other refinery processing was insufficient, and a new source of supply had to be found. Isobutane produced from the new normal paraffin isomerization process met that need.

The first commercial butane isomerization unit went on-stream in late 1941. By the end of the war, 38 plants were in operation in the United States and 5 in allied countries for a total capacity of approximately 50,000 barrels per stream day (BPSD). Five principal isomerization processes, including one developed by UOP, were used in the United States. All were based on Friedel-Crafts chemistry and used aluminum chloride in some form.

The wartime units fulfilled the needs of the time. However, despite many improvements, the units remained difficult and costly to operate. Corrosion rates were excessive, plugging of catalyst beds and equipment was common, and catalyst consumption was high. The units were characterized by high maintenance and operating costs and low on-stream efficiency.

The introduction of UOP*'s Platforming* process in 1949 and the rapid spread of such catalytic reforming over dual-functional catalysts in the 1950s served to focus attention on the development of similar catalysts for paraffin isomerization. The term *dual functional* refers to the hydrogenation and controlled-acidity components of a catalyst. Isomerization was known to be one of several reactions that occurred during catalytic reforming, and so isolating this reaction for use with feeds that did not require any of the other reactions was a natural next step.

Although the earlier of these dual-functional catalysts eliminated many of the shortcomings of the wartime aluminum chloride catalyst systems, they required relatively high

*Trademark and/or service mark of UOP.

Downloaded from Digital Engineering Library @ McGraw-Hill (www.digitalengineeringlibrary.com)
Copyright © 2004 The McGraw-Hill Companies. All rights reserved.
Any use is subject to the Terms of Use as given at the website.

UOP BUTAMER PROCESS

operating temperatures. At these temperatures, unfavorable equilibriums limited per-pass conversion. Further research was conducted, and in 1959, UOP made available to the industry a butane isomerization process, UOP's Butamer* process, that used a highly active, low-temperature hydroisomerization catalyst capable of achieving butane conversion at temperature levels equivalent to the wartime Friedel-Crafts systems without the attendant corrosion or sludge formations. Industry acceptance of the UOP process was rapid, and in late 1959, the first Butamer unit, the first commercial butane isomerization unit to use a low-temperature, dual-functional catalyst system, was placed on-stream on the United States West Coast.

PROCESS DESCRIPTION

The Butamer process is a fixed-bed, vapor-phase process promoted by the injection of trace amounts of organic chloride. The reaction is conducted in the presence of a minor amount of hydrogen, which suppresses the polymerization of olefins formed as intermediates in the isomerization reaction. Even though the chloride is converted to hydrogen chloride, carbon steel construction is used successfully because of the dry environment. The process uses a high-activity, selective catalyst that promotes the desired conversion of normal butane (nC_4) to isobutane at low temperature and, hence, at favorable equilibrium conditions.

Regardless of the iC_4 content of the feed, the butane fraction leaving the unit contains approximately 60 percent by volume of iC_4. Therefore, to obtain optimum plant performance, the refiner wants to charge a butane cut containing the highest practical content of nC_4.

The catalytic reaction is highly selective and efficient and results in a minimum of hydrocracking to light ends or the formation of heavy coproduct. Volumetric yield of iC_4 product based on an nC_4 feed typically approximates slightly more than 100 percent.

PROCESS CHEMISTRY

Isomerization by dual-functional catalysts is thought to operate through an olefin intermediate. The formation of this intermediate is catalyzed by the metallic component, which is assumed for this discussion to be platinum:

$$CH_3 - CH_2 - CH_2 - CH_3 \xrightarrow{Pt} CH_3 - CH_2 - CH = CH_2 + H_2 \qquad (9.2.1)$$

This reaction is, of course, reversible, and because these catalysts are used under substantial hydrogen pressure, the equilibrium is far to the left. However, the acid function (H^+A^-) of the catalyst consumes the olefin to form a carbonium ion and thus permits more olefin to form despite the unfavorable equilibrium:

$$CH_3 - CH_2 - CH = CH_2 + H^+A^- \rightarrow CH_3 - CH_2 - \underset{+}{CH} - CH_3 + A^- \qquad (9.2.2)$$

The usual rearrangement ensues:

$$CH_3 - CH_2 - \underset{+}{CH} - CH_3 \rightarrow CH_3 - \underset{+}{\overset{\overset{CH_3}{|}}{C}} - CH_3 \qquad (9.2.3)$$

*Trademark and/or service mark of UOP.

Downloaded from Digital Engineering Library @ McGraw-Hill (www.digitalengineeringlibrary.com)
Copyright © 2004 The McGraw-Hill Companies. All rights reserved.
Any use is subject to the Terms of Use as given at the website.

UOP BUTAMER PROCESS

The isoolefin is then formed by the reverse analog of Eq. (9.2.2):

$$CH_3-\overset{\overset{\displaystyle CH_3}{|}}{C}-CH_3 + A^- \rightarrow CH_3-\underset{\underset{\displaystyle +}{|}}{\overset{\overset{\displaystyle CH_3}{|}}{C}}=CH_2 + H^+A^- \tag{9.2.4}$$

The isoparaffin is finally created by hydrogenation:

$$CH_3-\overset{\overset{\displaystyle CH_3}{|}}{C}=CH_2 + H_2 \xrightarrow{Pt} CH_3-\overset{\overset{\displaystyle CH_3}{|}}{CH}-CH_3 \tag{9.2.5}$$

PROCESS VARIABLES

The degree of isomerization that occurs in the Butamer process is influenced by the following process variables.

Reactor Temperature

The reactor temperature is the main process control for the Butamer unit. An increase in temperature increases the iC_4 content of the product toward its equilibrium value and slightly increases cracking of the feed to propane and lighter.

Liquid Hourly Space Velocity (LHSV)

An increase in LHSV tends to decrease the iC_4 in the product at a constant temperature when other conditions remain the same.

Hydrogen-to-Hydrocarbon Ratio (H2/HC)

The conversion of nC_4 to iC_4 is increased by reducing the H_2/HC ratio; however, the hydrogen effect is slight over the usual operating range. Significant capital savings do result when the H_2/HC ratio is low enough to eliminate the recycle hydrogen compressor and product separator. UOP's standard (and patented) design calls for a H_2/HC ratio of 0.03 molar and allows operation with once-through hydrogen.

Pressure

Pressure has no effect on equilibrium and only a minor influence on the conversion of normal butane to isobutane.

PROCESS CONTAMINANTS

Water poisons the Butamer catalyst. A simple but effective molecular-sieve drying system is used on unit hydrocarbon and gas feeds. Sulfur is a temporary poison that inhibits catalyst

Downloaded from Digital Engineering Library @ McGraw-Hill (www.digitalengineeringlibrary.com)
Copyright © 2004 The McGraw-Hill Companies. All rights reserved.
Any use is subject to the Terms of Use as given at the website.

UOP BUTAMER PROCESS

activity. The effect of sulfur entering the reaction system is to lower the conversion per pass of normal butane to isobutane.

Butamer catalyst exposed to sulfur essentially recovers its original activity when the sulfur is eliminated from the feed. Also, the effect of sulfur on the Butamer system is minimal because the molecular-sieve feed dryers are also capable of economically removing this material from typical butane fractions. Should a potential feed of relatively high sulfur content be encountered, the bulk of this content would be mercaptan sulfur that is readily removed by simple caustic extraction, such as UOP's Merox* process. The residual sulfur remaining after extraction would then be removed by the feed-drying system of the molecular sieve. Another catalyst poison is fluoride, which also degrades the molecular sieves used for drying. Butamer feeds derived from an HF alkylation unit contain such fluorides, which are removed by passing them over a hot bed of alumina.

The proper design of simple feed-pretreatment facilities effectively controls contaminants and minimizes catalyst consumption.

ISOMERIZATION REACTORS

One characteristic of the Butamer process is that catalyst deactivation begins at the inlet of the first reactor and proceeds slowly as a rather sharp front downward through the bed. The adverse effect that such deactivation can have on unit on-stream efficiency is avoided by installing two reactors in series. Each reactor contains 50 percent of the total required catalyst. Piping and valving are arranged to permit isolation of the reactor containing the spent catalyst while the second reactor remains in operation. After the spent catalyst has been replaced, the relative processing positions of the two reactors are reversed. During the short time when one reactor is off-line for catalyst replacement, the second reactor is fully capable of maintaining continuous operation at design throughput, yield, and conversion. Thus, run length is contingent only on the scheduling of shutdown for normal inspection and maintenance.

In addition to the advantages associated with maximizing on-stream efficiency, a two-reactor system effectively reduces catalyst consumption. Reactors are typically sized so that by the time approximately 75 percent of the total catalyst bed is spent, isomerization decreases to an unacceptable level, and some catalyst replacement is needed. In a single-reactor unit, 25 percent of the original catalyst load, although still active, is discarded when the reactor is unloaded. In a two-reactor system, no active catalyst need be discarded because 50 percent replacement is made when catalyst in the first reactor has been spent. Catalyst utilization is thus 100 percent.

The choice of a single-reactor or a two-reactor system depends on the particular situation and must be made by evaluating the advantages of essentially continuous operation and increased catalyst utilization against the expense of the somewhat more costly two-reactor installation. Both systems are commercially viable, and Butamer plants of both types are in operation.

PROCESS FLOW SCHEME

The overall process-flow scheme for the Butamer system depends on the specific application. Feed streams of about 30 percent or more iC_4 are advantageously enriched in nC_4 by charging the total feed to a deisobutanizer column. Feeds that are already rich in nC_4 are

*Trademark and/or service mark of UOP.

Downloaded from Digital Engineering Library @ McGraw-Hill (www.digitalengineeringlibrary.com)
Copyright © 2004 The McGraw-Hill Companies. All rights reserved.
Any use is subject to the Terms of Use as given at the website.

UOP BUTAMER PROCESS

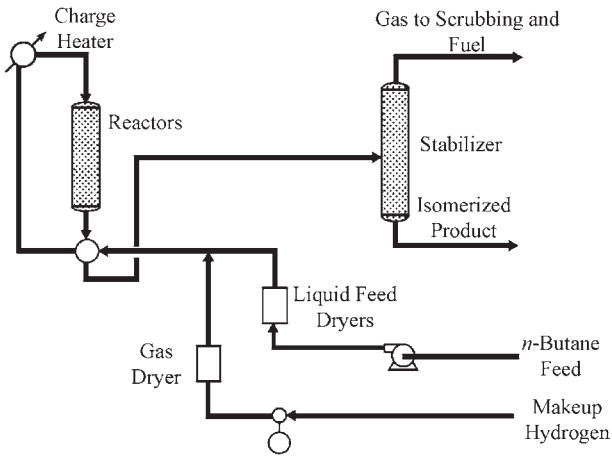

FIGURE 9.2.1 UOP Butamer process.

charged directly to the reactor section. A simplified flow scheme is depicted in Fig. 9.2.1. An nC_4 concentrate, recovered as a deisobutanizer sidecut, is directed to the reactor section, where it is combined with makeup hydrogen, heated, and charged to the Butamer reactor. Reactor effluent is cooled and flows to a stabilizer for removal of the small amount of light gas coproduct. Neither a recycle gas compressor nor a product separator is required because only a slight excess of hydrogen is used over that required to support the conversion reaction. Stabilizer bottoms is returned to the deisobutanizer, where any iC_4 present in the total feed or produced in the isomerization reactor is recovered overhead. Unconverted nC_4 is recycled to the reactor section by way of the deisobutanizer sidecut. The system is purged of pentane and heavier hydrocarbons, which may be present in the feed, by withdrawing a small drag stream from the deisobutanizer bottoms.

The Butamer process may also be incorporated into the design of new alkylation plants or into the operation of existing alkylation units. For this type of application, the inherent capabilities of the iC_4 fractionation facilities in the alkylation unit may be used to prepare a suitable Butamer feed with a high nC_4 content and to recover unconverted nC_4 for recycle.

The major historical use of the Butamer process has been the production of iC_4 for the conversion of C_3 and C_4 refinery olefins to high-octane alkylate. A more recent demand for iC_4 has developed in conjunction with the manufacture of methyl tertiary butyl ether (MTBE), which is a high-octane gasoline blending component particularly useful in reformulated gasolines. Isobutane is dehydrogenated to isobutylene and then made into MTBE. Unconverted butenes and nC_4 are recycled as appropriate to achieve essentially 100 percent conversion of the feed butanes to MTBE.

COMMERCIAL EXPERIENCE

More than 70 UOP Butamer units have been commissioned to date, and 5 others are in engineering design or construction. Product design capacities range from 800 to more than 30,000 BPSD.

Typical yields and investment and operating costs are shown in Tables 9.2.1, 9.2.2, and 9.2.3.

Downloaded from Digital Engineering Library @ McGraw-Hill (www.digitalengineeringlibrary.com)
Copyright © 2004 The McGraw-Hill Companies. All rights reserved.
Any use is subject to the Terms of Use as given at the website.

UOP BUTAMER PROCESS

TABLE 9.2.1 Estimated Yields*

feed	MTA	m^3/h	BPSD	SCF/day	wt % on
		Feedstock			
Propane	978		37		0.85
Isobutane	29,325		996		25.50
n-butane	82,282		2693		71.55
Isopentane	1,805		56		1.57
n-pentane	610		18		0.53
Total	115,000		3800		100.00
Chemical hydrogen (100% H_2 purity)		65.6		55,600	0.04
		Products			
Isobutane:					
Propane	978		37		0.85
Isobutane	104,190		3540		90.60
n-butane	3,922		128		3.41
Total	109,089		3705		94.86
Heavy-end by-product:					
Isobutane	69		2		0.06
n-butane	2,702		89		2.35
Isopentane	1,058		32		0.92
n-pentane	978		30		0.85
Total	4,807		153		4.18
Light gas:					
Methane	252			39,300	0.22
Ethane	357			29,800	0.31
Propane	541			31,300	0.47
Total	1,150			100,400	1.00

*Basis: Feedstock type: field butane. Hydrogen requirement: does not include that dissolved in the separator liquid. Isobutane purity: 96.5 vol %.

Note: MTA = metric tons per annum; BPSD = barrels per stream day; SCF = standard cubic feet.

TABLE 9.2.2 Estimated Investment Requirements for Butamer Unit with Deisobutanizer Column*

	$ U.S.
Materials and labor	10,400,000
Design, engineering, and contractors' fees	4,500,000
Estimated erected cost	14,900,000
Allowance for catalyst, chemicals, and noble metal on catalyst	280,000

*Basis: Feed rate: 115,000 MTA (3,800 BPSD). U.S. Gulf Coast erection to UOP standards exclusive of off-site costs, third quarter 2001. Allowance for catalyst and chemicals reflects current prices FOB point of manufacture.

Downloaded from Digital Engineering Library @ McGraw-Hill (www.digitalengineeringlibrary.com)
Copyright © 2004 The McGraw-Hill Companies. All rights reserved.
Any use is subject to the Terms of Use as given at the website.

UOP BUTAMER PROCESS

TABLE 9.2.3 Estimated Operating Requirements*

Utility requirements	Deisobutanizer	Butamer unit	$ U.S. per stream day
Power, kW	200	300	600
Medium-pressure steam:			
At 14.1 kg/cm^2, 1000 kg/h		5.0	
At 200 lb/in^2 gage, 1000 lb/h		11.1	936
Low-pressure steam:			
At 3.5 kg/cm^2, 1000 kg/h	16.3		
At 50 lb/in^2 gage, 1000 lb/h	35.9		2153
Cooling water, m^3/h (gal/min)	35 (155)	89 (390)	77
Total			3766
Catalyst and chemical consumption, $ U.S. per stream day		523	523
Labor allowance/shift:			
Operator			0.50
Helper			0.50

*Basis: Feed rate 115,000 MTA (3800 BPSD). Utility cost basis: electric power $0.05/kW; medium-pressure steam $3.50/klb; low-pressure steam $2.50/klb. Maintenance allowance 3% of erected cost.

Downloaded from Digital Engineering Library @ McGraw-Hill (www.digitalengineeringlibrary.com)
Copyright © 2004 The McGraw-Hill Companies. All rights reserved.
Any use is subject to the Terms of Use as given at the website.

Downloaded from Digital Engineering Library @ McGraw-Hill (www.digitalengineeringlibrary.com)
Copyright © 2004 The McGraw-Hill Companies. All rights reserved.
Any use is subject to the Terms of Use as given at the website.

Source: HANDBOOK OF PETROLEUM REFINING PROCESSES

CHAPTER 9.3
UOP PENEX PROCESS

Nelson A. Cusher
UOP LLC
Des Plaines, Illinois

INTRODUCTION

A component of refinery gasoline pools that frequently offers the best opportunity for quality improvement is the pentane-hexane fraction, or light straight-run (LSR) naphtha. The LSR is characterized by a low octane number, ordinarily 60 to 70 research octane number (RON), clear. Historically, this fraction, which constitutes approximately 10 percent of a typical gasoline pool in the United States and often a higher percentage in Europe, has been blended directly into gasoline without additional processing except perhaps treating for mercaptan removal. The low octane rating could be increased by approximately 16 to 18 numbers because of its excellent lead susceptibility. The low octane placed the C_5-C_6 straight run in the position of being that segment of the gasoline pool helped most by the addition of lead and least in need of upgrading by processing.

As the petroleum industry moved toward the marketing of motor fuels with reduced or zero lead levels, accommodating the LSR in the gasoline pool became increasingly difficult. The conversion of these C_5 and C_6 paraffins to the corresponding branched isomers to increase their RON, clear, octane number was recognized as a logical and necessary step. One option that UOP* offers to accomplish this upgrading is the Penex* process, which uses a highly active, low-temperature hydroisomerization catalyst. The reliability of this catalyst has been commercially demonstrated since 1959 in butane isomerization (UOP's Butamer* process) and since 1969 in C_5-C_6 isomerization.

As a result of U.S. reformulated gasoline legislation for benzene reduction during the 1990s, a variation of UOP's Penex process is being used to saturate all the benzene in the LSR cut and boost the octane of this gasoline fraction.

PROCESS DISCUSSION

The UOP's Penex process is specifically designed for the catalytic isomerization of pentane, hexanes, and mixtures thereof. The reactions take place in the presence of hydrogen, over a fixed bed of catalyst, and at operating conditions that promote isomerization and

*Trademark and/or service mark of UOP.

Downloaded from Digital Engineering Library @ McGraw-Hill (www.digitalengineeringlibrary.com)
Copyright © 2004 The McGraw-Hill Companies. All rights reserved.
Any use is subject to the Terms of Use as given at the website.

UOP PENEX PROCESS

minimize hydrocracking. Operating conditions are not severe, as reflected by moderate operating pressure, low temperature, and low hydrogen partial pressure requirements.

Ideally, this isomerization catalyst would convert all the feed paraffins to the high-octane-number branched structures: normal pentane (nC_5) to isopentane (iC_5) and normal hexane (nC_6) to 2,2- and 2,3-dimethylbutane. The reaction is controlled by a thermodynamic equilibrium that is more favorable at low temperature.

Table 9.3.1 shows typical charge and product compositions for a C_5-C_6 Penex unit. The compositions of both the C_5 and C_6 fractions correspond to a close approach to equilibrium at the operating temperature.

With C_5 paraffins, interconversion of normal pentane and isopentane occurs. The C_6-paraffin isomerization is somewhat more complex. Because the formation of 2- and 3-methylpentane and 2,3-dimethylbutane is limited by equilibrium, the net reaction involves mainly the conversion of normal hexane to 2,2-dimethylbutane. All the feed benzene is hydrogenated to cyclohexane, and a thermodynamic equilibrium is established between methylcyclopentane and cyclohexane. The octane rating shows an appreciation of some 14 numbers.

PROCESS FLOW

As shown in Fig. 9.3.1, light naphtha feed is charged to one of the two dryer vessels. These vessels are filled with molecular sieves, which remove water and protect the catalyst. After mixing with makeup hydrogen, the feed is heat-exchanged against reactor effluent. It then enters a charge heater before entering the reactors. Two reactors normally operate in series.

The reactor effluent is cooled before entering the product stabilizer. In new Penex designs, both the recycle gas compressor and the product separator have been eliminated. Only a slight excess of hydrogen above chemical consumption is used. The makeup hydrogen, which can be of any reasonable purity, is typically provided by a catalytic reformer. The stabilizer overhead vapors are caustic scrubbed for removal of the HCl formed from organic chloride added to the reactor feed to maintain catalyst activity. After scrubbing, the overhead gas then flows to fuel. The stabilized, isomerized liquid product from the bottom of the column then passes to gasoline blending.

Alternatively, the stabilizer bottoms can be separated into normal and isoparaffin components by fractionation or molecular-sieve separation or a combination of the two meth-

TABLE 9.3.1 Typical C_5-C_6 Chargestock and Product Compositions

	Percent of total	Chargestock	Product
C_5 paraffins, wt %:	47.5		
Isopentane		42.0	77.0
n-C_5		58.0	23.0
C_6 paraffins, wt %:	45.2		
2,2-dimethylbutane		0.9	31.6
2,3-dimethylbutane		5.0	10.4
Methylpentanes		48.2	46.9
n-C_6		45.9	11.1
C_6 cyclic, wt %:	7.3		
Methylcyclopentane		57.0	52.0
Cyclohexane		17.0	48.0
Benzene		26.0	0
Unleaded octane numbers:			
Research		70.1	83.8
Motor		66.8	81.1

Downloaded from Digital Engineering Library @ McGraw-Hill (www.digitalengineeringlibrary.com)
Copyright © 2004 The McGraw-Hill Companies. All rights reserved.
Any use is subject to the Terms of Use as given at the website.

UOP PENEX PROCESS

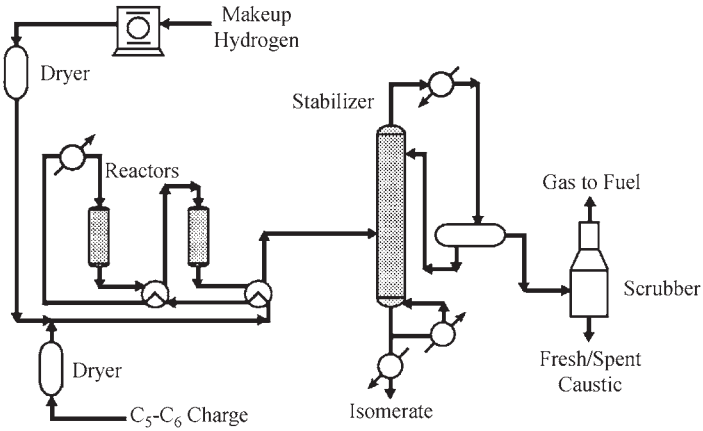

FIGURE 9.3.1 UOP Penex process.

ods to obtain recycle of the normal paraffins and low-octane methylpentanes (MeC_5). Product octanes in the range of 87 to 92 RON, clear, can be achieved by selecting one of the various possible schemes.

The least capital-intensive recycle flow scheme is achieved by combining the Penex process with a deisohexanizer column. The deisohexanizer column concentrates the low-octane methylpentanes into the sidecut stream. This sidecut stream combines with the fresh feed before entering the Penex reactor. The deisohexanizer column overhead, which is primarily isopentane, 2,2-dimethylbutane, and 2,3-dimethylbutane, is recovered for gasoline blending. A small bottoms drag stream, consisting of C_6 naphthenes and C_7's, is also removed from the deisohexanizer column and used for gasoline blending or as reformer feed.

An efficient recycle operation is obtained by combining the Penex process with UOP's Molex* process, which uses molecular sieves to separate the stabilized Penex product into a high-octane isoparaffin stream and a low-octane normal paraffin stream. In this system, fresh feed together with the recovered low-octane normal paraffin stream is charged to the Penex unit. The isomerized product is denormalized in the Molex unit and recovered for gasoline blending.

Many configurations of separation equipment are possible, as shown in Fig. 9.3.2. The optimum arrangement depends on the specific chargestock composition and the required product octane number.

In addition to increasing octane, another benefit of all Penex-based flow schemes is the saturation of all benzene to cyclohexane. This aspect is particularly important to refiners who want to reduce the level of benzene in their gasoline pool.

Some feedstocks, such as light reformate, can contain high levels of benzene. The performance of the Penex process can be compromised when processing these feedstocks because benzene hydrogenation is a highly exothermic reaction. The heat generated by the benzene hydrogenation reaction can cause the reactors to operate at conditions that are less favorable for octane upgrading. For these applications, UOP offers the Penex-Plus* process, which includes two reactor sections. The first section is designed to saturate the benzene to cyclohexane. The second section is designed to isomerize the feed for an overall octane increase. Each reactor is operated at conditions that favor the intended reactions for maximum conversion.

*Trademark and/or service mark of UOP.

Downloaded from Digital Engineering Library @ McGraw-Hill (www.digitalengineeringlibrary.com)
Copyright © 2004 The McGraw-Hill Companies. All rights reserved.
Any use is subject to the Terms of Use as given at the website.

UOP PENEX PROCESS

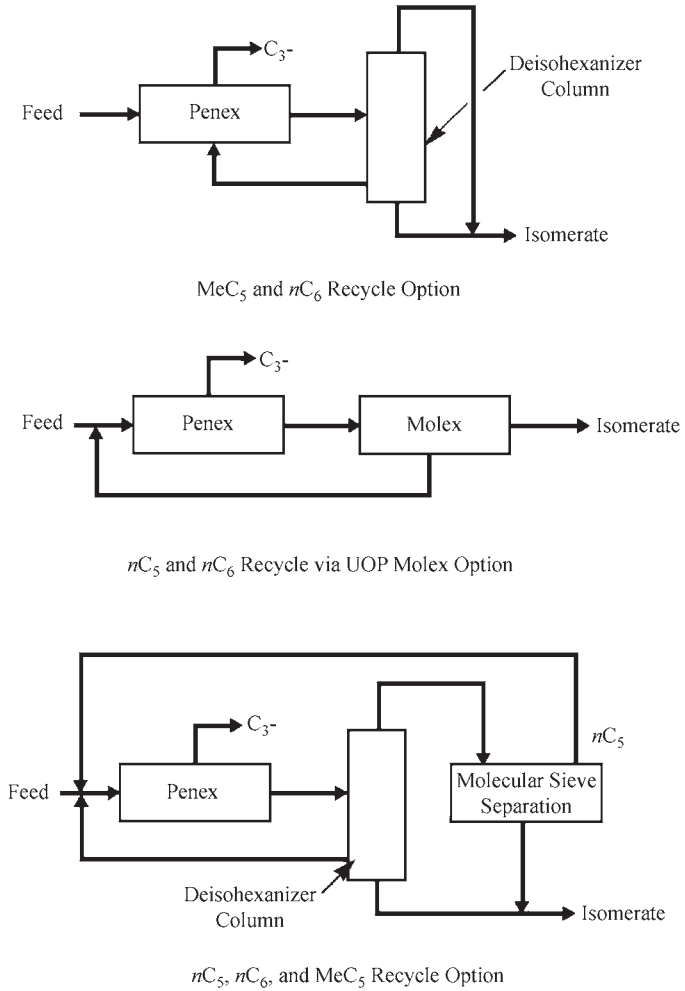

FIGURE 9.3.2 Penex standard flow options.

UOP also offers the BenSat* process. This process is similar to the first reactor section of a Penex-Plus unit. Benzene is saturated to cyclohexane with no side reactions. A significant volumetric increase occurs with the BenSat process.

PROCESS APPLICATIONS

As mentioned earlier, the primary purpose of the Penex process is to improve the octane of LSR naphtha. The octane levels for a typical straight-run C_5-C_6 stock are characteristic of the various operating modes (Table 9.3.2).

*Trademark and/or service mark of UOP.

Downloaded from Digital Engineering Library @ McGraw-Hill (www.digitalengineeringlibrary.com)
Copyright © 2004 The McGraw-Hill Companies. All rights reserved.
Any use is subject to the Terms of Use as given at the website.

UOP PENEX PROCESS

If the required octane number can be met by recycle of the methylpentanes, the refiner probably would choose fractionation for capital reasons. Where the cost of utilities is high, the refiner might choose a Molex unit, which would separate both nC_5 and nC_6 for recycle. The utility cost would be lower for separating both of these in a Molex unit than it would be for separating the methylpentanes by fractionation, and the refiner would achieve a higher RON.

Separation and recycle during paraffin isomerization are not new. Such options have been installed on many of the isomerization units in operation since the late 1980s. This change is a response to lead phaseout and benzene reduction in gasoline.

The effect of lead elimination on the LSR portion of gasoline can be seen in Table 9.3.3. The octane improvement brought about by modern isomerization techniques can be broken down further. The C_6 portion of the straight run is about 55 RON, clear, and this number is increased to 80 and 93 by once-through and recycle isomerization, respectively. The corresponding figures for the C_5 fraction are 75, 86, and 93.

The important figures, however, are the lead susceptibilities, or the difference between leaded and unleaded octane numbers. As shown in Table 9.3.3, the susceptibility of the entire pool is 7 RONs and that of the C_5-C_6 fraction is 17 to 18. These figures show the principal reason why no one was interested in C_5-C_6 isomerization prior to the worldwide movement toward lead elimination.

The data show that once-through isomerization almost compensates for lead elimination in the LSR fraction and recycle isomerization more than makes up for it. To look at the figures another way, in a typical gasoline pool containing 10 percent LSR naphtha, isomerization provides a way of increasing the pool RON by 2 or more numbers with essentially no yield loss.

Reformulated gasoline legislation in Europe and the United States is limiting aromatics concentrations in gasoline. Similar legislation is being enacted or is under considera-

TABLE 9.3.2 Typical Feed and Product Octane

	RON, clear
Charge	69
Product	
Option 1: no recycle	83
Option 2: recycle of 2- and 3-MeC_5+nC_6	88
Option 3: recycle of nC_5+nC_6	89
Option 4: recycle of nC_5+nC_6+2- and 3-MeC_5	92

Note: RON = research octane number.

TABLE 9.3.3 Lead Susceptibilities

	Octane number	
	RON, clear	RON + 0.6 g tetraethyl lead/L
U.S. gasoline pool	89	96
Straight-run pentane-hexane:		
Without isomerization	68–70	86–87
Once-through isomerization	83–84	96–97
Isomerized with maximum recycle	92–93	101–103

Downloaded from Digital Engineering Library @ McGraw-Hill (www.digitalengineeringlibrary.com)
Copyright © 2004 The McGraw-Hill Companies. All rights reserved.
Any use is subject to the Terms of Use as given at the website.

UOP PENEX PROCESS

tion in other parts of the world. This limitation on the aromaticity of gasoline further enhances the importance of high-octane aliphatic components such as alkylate and isomerized C_5-C_6.

THERMODYNAMIC EQUILIBRIUM CONSIDERATIONS, CATALYSTS, AND CHEMISTRY

Paraffin-isomerization catalysts fall mainly into two principal categories: those based on Friedel-Crafts catalysts as classically typified by aluminum chloride and hydrogen chloride and dual-functional hydroisomerization catalysts.

The Friedel-Crafts catalysts represented a first-generation system. Although they permitted operation at low temperature, and thus a more favorable isomerization equilibrium, they lost favor because these systems were uneconomical and difficult to operate. High catalyst consumption and a relatively short life resulted in high maintenance costs and a low on-stream efficiency.

These problems were solved with the development of second-generation dual-functional hydroisomerization catalysts. These catalysts included a metallic hydrogenation component in the catalyst and operated in a hydrogen environment. However, they had the drawback of requiring a higher operating temperature than the Friedel-Crafts systems.

The desire to operate at lower temperatures, at which the thermodynamic equilibrium is more favorable, dictated the development of third-generation catalysts. The advantage of these low-temperature [below 200°C (392°F)] catalysts contributed to the relative nonuse of the high-temperature versions. Typically, these noble-metal, fixed-bed catalysts contain a component to provide high catalytic activity. They operate in a hydrogen environment and employ a promoter. Because hydrocracking of light gases is slight, liquid yields are high. The first of these catalysts was commercialized in 1959 in the UOP Butamer process for butane isomerization.

An improved version of these third-generation catalysts is used in the Penex process. Paraffin isomerization is most effectively catalyzed by a dual-function catalyst containing a noble metal and an acid function. The reaction is believed to proceed through an olefin intermediate that is formed by the dehydrogenation of the paraffin on the metal site. The following reactions use butane for simplicity:

$$CH_3 - CH_2 - CH_2 - CH_3 \overset{Pt}{\leftrightarrow} CH_3 - CH_2 - CH = CH_2 + H_2 \tag{9.3.1}$$

The equilibrium conversion of paraffin is low at paraffin isomerization conditions. However, sufficient olefin must be present to convert a carbonium ion by the strong acid site:

$$CH_3 - CH_2 - CH = CH_2 + [H^+][A^-] \rightarrow CH_3 - CH_2 - \overset{+}{CH} - CH_3 + A \tag{9.3.2}$$

Through the formation of the carbonium ion, the olefin product is removed, and equilibrium is allowed to proceed. The carbonium ion in the second reaction undergoes skeletal isomerization, probably through a cycloalkyl intermediate:

$$CH_3 - CH_2 - \overset{+}{CH} - CH_3 \rightarrow \begin{array}{c} C \quad\quad CH_3 \\ /H^+\backslash/ \\ C - C \end{array} \rightarrow CH_3 - \underset{+}{\overset{CH_3}{\overset{|}{C}}} - CH_3 \tag{9.3.3}$$

Downloaded from Digital Engineering Library @ McGraw-Hill (www.digitalengineeringlibrary.com)
Copyright © 2004 The McGraw-Hill Companies. All rights reserved.
Any use is subject to the Terms of Use as given at the website.

UOP PENEX PROCESS

This reaction proceeds with difficulty because it requires the formation of a primary carbonium ion at some point in the reaction. Nevertheless, the strong acidity of the isomerization catalyst provides enough driving force for the reaction to proceed at high rates. The isoparaffinic carbonium ion is then converted to an olefin through loss of a proton to the catalyst site:

$$\mathrm{Ch_3 - \overset{\overset{\displaystyle Ch_3}{|}}{\underset{\underset{\displaystyle +}{|}}{C}} - Ch_3 + A^- \rightarrow Ch_3 - \overset{\overset{\displaystyle Ch_3}{|}}{C} = Ch_2 + [H^+][A^-]} \tag{9.3.4}$$

In the last step, the isoolefin intermediate is hydrogenated rapidly back to the analogous isoparaffin:

$$\mathrm{Ch_3 - \overset{\overset{\displaystyle CH_3}{|}}{C} = Ch_2 + H_2 \rightarrow Ch_3 - \overset{\overset{\displaystyle CH_3}{|}}{CH} - CH_3} \tag{9.3.5}$$

Equilibrium limits the maximum conversion possible at any given set of conditions. This maximum is a strong function of the temperature at which the conversion takes place. A more favorable equilibrium exists at lower temperatures.

Figure 9.3.3 shows the equilibrium plot for the pentane system. The maximum isopentane content increases from 64 mol % at 260°C to 82 mol % at 120°C (248°F). Neopentane and cyclopentane have been ignored because they seem to occur only in small quantities and are not formed under isomerization conditions.

The hexane equilibrium curve shown in Fig. 9.3.4 is somewhat more complex than that shown in Fig. 9.3.3. The methylpentanes have been combined because they have nearly the same octane rating. The methylpentane content in the C_6-paraffin fraction remains nearly constant over the entire temperature range. Similarly, the fraction of 2,3-dimethylbutane is almost constant at about 9 mol % of the C_6 paraffins. Theoretically, as the temperature is reduced, 2,2-dimethylbutane can be formed at the expense of normal hexane. This reaction is highly desirable because nC_6 has a RON of 30. The RON of 2,2-dimethylbutane is 93.

Of course, the petroleum refiner is more interested in octane ratings than isomer distributions. Figure 9.3.5 shows the unleaded research octane ratings of equilibrium mixtures

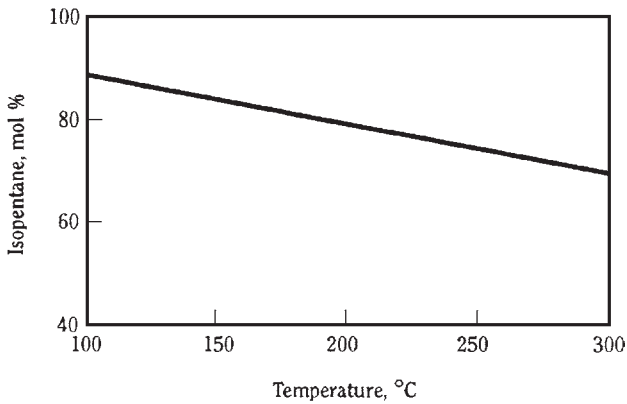

FIGURE 9.3.3 C_5 paraffin equilibrium plot.

Downloaded from Digital Engineering Library @ McGraw-Hill (www.digitalengineeringlibrary.com)
Copyright © 2004 The McGraw-Hill Companies. All rights reserved.
Any use is subject to the Terms of Use as given at the website.

UOP PENEX PROCESS

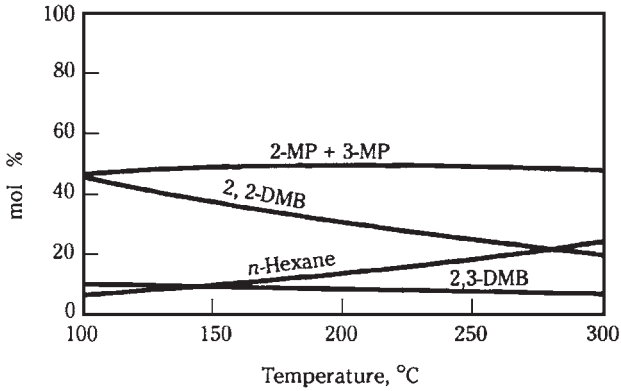

FIGURE 9.3.4 C_6 paraffin equilibrium plot.

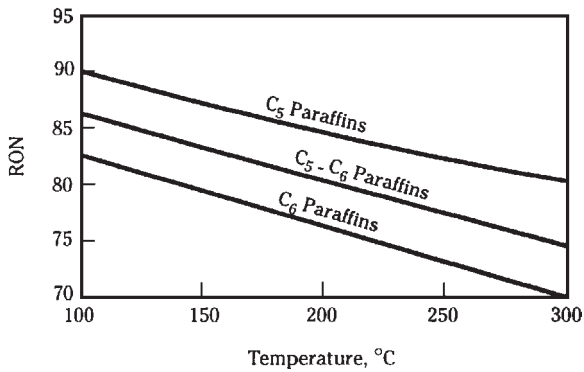

FIGURE 9.3.5 Unleaded RON ratings of equilibrium fractions.

plotted against the temperature characteristic of that equilibrium for a typical chargestock. Both the C_5 and the C_6 paraffins show an increase in octane ratings as the temperature is reduced.

Because equilibrium imposes a definite upper limit on the amount of desirable branched isomers that can exist in the reactor product, operating temperatures are thought to provide a simple basis for catalyst comparison or classification. However, temperature is only an approximate comparison that at best can discard a catalyst whose activity is so low that it might be operated at an unfavorably high temperature. Further, two catalysts that operate in the same general low-temperature range may differ in the closeness with which they can approach equilibrium in the presence of reasonable amounts of catalyst.

FEEDSTOCK REQUIREMENTS

To maintain the high activity of the Penex catalyst, the feedstock must be hydrotreated. However, costly prefractionation to sharply limit the levels of C_6 cyclic and C_7 compounds

Downloaded from Digital Engineering Library @ McGraw-Hill (www.digitalengineeringlibrary.com)
Copyright © 2004 The McGraw-Hill Companies. All rights reserved.
Any use is subject to the Terms of Use as given at the website.

UOP PENEX PROCESS

is not required. In fact, the Penex process affords the refiner with remarkably good flexibility in the choice of feedstocks, both at the time of design and even after the unit has been constructed. The latter is important because changes in the overall refinery processing scheme may occur in response to changing market situations. These changes could require that the composition of the isomerization feed be modified to achieve optimal results for the entire refinery.

The Penex system can be applied to the processing of feeds containing up to 15 percent C_7 with minimal or no effect on design requirements or operating performance. Generally, the best choice is to operate with lower levels of C_7+ material because these compounds are better suited for upgrading in a reforming process. Charge containing about 5.0 percent or even higher amounts of benzene is completely acceptable in the Penex chargestock and will not produce carbon on the catalyst. When the feed has extremely high levels of benzene, a Penex-Plus unit is recommended. (The "Plus" section can be retrofitted to an existing Penex unit should the refiner want to process high-benzene feedstocks in an existing Penex unit.) The low-octane $C_6 -$ cut recovered from raffinate derived from aromatic-extraction operations typically contains a few percent of olefins and is completely acceptable as Penex feed without prehydrogenation.

Sulfur is an undesirable constituent of the Penex feed. However, it is easily removed by conventional hydrotreating. Sulfur reduces the rate of isomerization and, therefore, the product octane number. Its effect is only temporary, however, and once it has been removed from the plant, the catalyst regains its normal activity.

Water, other oxygen-containing compounds, and nitrogen compounds are the only impurities normally found in the feedstock that will irreversibly poison the Penex catalyst and shorten its life. Fresh feed and makeup hydrogen are dried by a simple, commercially proven desiccant system.

COMMERCIAL EXPERIENCE

Industry acceptance of the UOP's Penex process has been widespread. The first Penex unit was placed on-stream in 1958. By early 2002, more than 120 UOP Penex units had been commissioned, and more than 5 others were in engineering design or construction.

A summary of typical commercial Penex unit yields, product properties, capital costs, utility requirements, and overall operating costs is presented in Tables 9.3.4 through 9.3.9.

Downloaded from Digital Engineering Library @ McGraw-Hill (www.digitalengineeringlibrary.com)
Copyright © 2004 The McGraw-Hill Companies. All rights reserved.
Any use is subject to the Terms of Use as given at the website.

UOP PENEX PROCESS

TABLE 9.3.4 Typical Estimated Yields for Once-through Processing

	Reactor feed	Reactor product
	C_4+ streams, BPD	
iC_4	10	109
nC_4	170	159
iC_5	1,700	3,215
nC_5	2,369	940
Cyclo-C_5	172	121
2,2-dimethylbutane	100	1,565
2,3-dimethylbutane	197	473
2-methylpentane	1,234	1,502
3-methylpentane	899	761
nC_6	2,076	477
Methylcyclopentane	328	290
Cyclo-C_6	278	279
Benzene	277	0
C_7	190	164
Total	10,000	10,136
	C_4+ properties	
Specific gravity	0.662	0.651
Reid vapor pressure, kg/cm^2 (lb/in^2)	0.77 (10.9)	0.96 (13.7)
Octane number		
RON, clear	69.3	83.9
RON+3 cm^3 tetraethyl lead/U.S. gal	89.1	98.1
MON, clear	67.4	81.9
MON+3 cm^3 tetraethyl lead/U.S. gal	87.9	99.6
Hydrogen consumption, SCF/day		1,953,000
Light-gas yields, SCF/day		
C_1		15,000
C_2		7,600
C_3		156,700

Note: BPD = barrels per day; RON = research octane number; MON = motor octane number; SCF = standard cubic feet; *i* and *n* indicate iso and normal forms, respectively.

Downloaded from Digital Engineering Library @ McGraw-Hill (www.digitalengineeringlibrary.com)
Copyright © 2004 The McGraw-Hill Companies. All rights reserved.
Any use is subject to the Terms of Use as given at the website.

UOP PENEX PROCESS

TABLE 9.3.5 Typical Estimated Yields: Penex with Molex Recycle*

Component	Fresh feed to reactor	From Molex to reactor	Stabilizer bottoms	Isomerate product from Molex
		C_4+ streams, BPD		
iC_4	10	0	210	210
nC_4	170	0	163	163
iC_5	1,700	102	4,195	4,093
nC_5	2,369	1,253	1,319	66
Cyclo-C_5	172	3	123	120
2,2-dimethylbutane	100	40	1,653	1,613
2,3-dimethylbutane	197	13	544	531
2-methylpentane	1,234	43	1,776	1,733
3-methylpentane	899	23	931	908
nC_6	2,076	555	585	30
Methylcyclopentane	328	7	268	261
Cyclo-C_6	278	6	261	255
Benzene	277	0	0	0
C_7	190	4	176	172
Total	10,000	2,049	12,204	10,155
		C_4+ properties		
Specific gravity	0.662	0.643	0.648	0.649
Reid vapor pressure, kg/cm^2 (lb/in^2)	0.77 (10.9)	0.82 (11.7)	0.98 (13.9)	1.01 (14.4)
Octane number				
RON, clear	69.3	56.6	83.4	88.8
RON+3 cm^3 tetraethyl lead/U.S. gal	89.1	81.4	97.8	101.1
MON, clear	67.4	55.8	81.4	86.6
MON + 3 cm^3 tetraethyl lead/U.S. gal	87.9	80.6	99.3	103.1
Hydrogen consumption, SCF/day				2,039,000
Light-gas yields, SCF/day:				
C_1				17,300
C_2				8,700
C_3				173,400

*Basis: 10,000 BPD.

Downloaded from Digital Engineering Library @ McGraw-Hill (www.digitalengineeringlibrary.com)
Copyright © 2004 The McGraw-Hill Companies. All rights reserved.
Any use is subject to the Terms of Use as given at the website.

TABLE 9.3.6 Typical Estimated Yields of Penex with Deisohexanizer Sidecut Recycle

Component	Fresh feed to reactor	From deisohexanizer to reactor	Stabilizer bottoms	Isomerate product from deisohexanizer	Deisohexanizer drag
			C_4+ streams, bbl/day		
iC_4	2	0	315	315	0
nC_4	49	0	94	94	0
iC_5	2,433	0	3,381	3,381	0
nC_5	1,885	0	1,033	1,033	0
Cyclo-C_5	100	0	70	70	0
2,2-dimethylbutane	57	59	2,813	2,754	0
2,3-dimethylbutane	222	369	898	527	2
2-methylpentane	1,532	1,743	2,906	1,142	20
3-methylpentane	992	1,282	1,506	190	35
nC_6	1,487	856	940	3	82
Methylcyclopentane	561	443	518	0	76
Cyclo-C_6	179	285	501	0	216
Benzene	195	0	0	0	0
C_7	306	177	345	0	168
Total	10,000	5,214	15,320	9,509	599
			C_4+ properties		
Specific gravity	0.661	0.678	0.656	0.640	0.724
Reid vapor pressure, kg/cm^2 (lb/in^2)	0.80 (11.4)	0.40 (5.7)	0.89 (12.6)	1.17 (16.7)	0.25 (3.6)
Octane number					
RON, clear	73.2	72.5	82.6	88.5	77.0
RON+3 cm^3 tetraethyl lead/U.S. gal	91.4	90.5	97.1	101.2	90.8
MON, clear	71.1	71.0	81.0	87.2	69.9
MON+3 cm^3 tetraethyl lead/U.S. gal	90.5	88.7	98.7	105.1	85.3

Downloaded from Digital Engineering Library @ McGraw-Hill (www.digitalengineeringlibrary.com)
Copyright © 2004 The McGraw-Hill Companies. All rights reserved.
Any use is subject to the Terms of Use as given at the website.

UOP PENEX PROCESS

TABLE 9.3.7 Typical Penex Estimated Investment Costs

	Once-through, million $ U.S.	Penex deisohexanizer, million $ U.S.	Penex-Molex, million $ U.S.
Material and labor	6.5	12.0	18.2
Design, engineering, and contractor's expenses	2.7	4.3	6.3
Total estimated erected cost of ISBL unit	9.2	16.3	24.5

Note: ISBL = inside battery limits; basis = 10,000 BPD.

TABLE 9.3.8 Typical Penex Estimated Utility Requirements*

	Options		
	Once-through	Penex deisohexanizer	Penex-Molex
Electric power, kW	375	975	830
Medium-pressure steam usage (to condensate), 1000 kg/h (klb/h)	9.4 (20.8)	12.0 (26.4)	9.6 (21.2)
Low-pressure steam usage (to condensate), 1000 kg/h (klb/h)	—	24.2 (53.4)	13.4 (29.6)
Cooling water, m^3/h (gal/min)	136 (600)	262 (1153)	277 (1220)

*Basis: 10,000 BPD.

TABLE 9.3.9 Typical Penex Estimated Operating Requirements*

	Once-through, million $ U.S.	Penex-deisohexanizer, million $ U.S.	Penex- Molex, million $ U.S.
Initial catalyst, adsorbent, and noble metal inventory	4.5	4.9	5.2
Annual catalyst and adsorbent costs	0.6	0.7	0.7
Annual chemical cost	0.1	0.1	0.1
Catalyst and chemical operating cost, $/bbl	0.2	0.2	0.2
Number of operators	1.5	2.5	2.5

*Basis: 10,000 BPD and 2001 prices.

Downloaded from Digital Engineering Library @ McGraw-Hill (www.digitalengineeringlibrary.com)
Copyright © 2004 The McGraw-Hill Companies. All rights reserved.
Any use is subject to the Terms of Use as given at the website.

Downloaded from Digital Engineering Library @ McGraw-Hill (www.digitalengineeringlibrary.com)
Copyright © 2004 The McGraw-Hill Companies. All rights reserved.
Any use is subject to the Terms of Use as given at the website.

Source: HANDBOOK OF PETROLEUM REFINING PROCESSES

CHAPTER 9.4
UOP TIP AND ONCE-THROUGH ZEOLITIC ISOMERIZATION PROCESSES

Nelson A. Cusher
UOP LLC
Des Plaines, Illinois

INTRODUCTION

Light straight-run (LSR) naphtha fractions made in the refinery are predominantly C_5's and C_6's. Some C_7's are also present. They are highly paraffinic and have clear research octane numbers (RONC) usually in the 60s. The nonnormal components have higher octanes than normal paraffins (Table 9.4.1) and are excellent gasoline-blending feedstocks. For the refiner who wants to upgrade the octane of a gasoline pool and has use for a high-purity normal paraffin product, UOP*'s IsoSiv* separation technology is a good fit. However, if octane improvement is of primary importance, isomerization technology is the best choice.

Paraffin isomerization to upgrade the octane of light-naphtha streams has been known to the refining industry for many years and has gained importance since the onset of the worldwide reduction in the use of lead antiknock compounds. This technology continues to be important in view of current U.S. legislation on reformulated gasoline.

The most cost-effective means to upgrade an LSR feedstock in a grassroots situation is UOP's Penex* process, which is discussed further in Chap. 9.3. However, refiners with idle hydroprocessing equipment, such as old catalytic reformers or hydrodesulfurization units, can consider converting this equipment to a UOP Once-Through (O-T) Zeolitic Isomerization process (formerly known as the Shell Hysomer† process). The process scheme is similar to that of a simple hydrotreater, as shown in Fig. 9.4.1, and conversions can be accomplished quickly and at low cost. With O-T Zeolitic Isomerization, a 10 to 12 octane-number increase for the C_5–71°C (160°F) light naphtha can be achieved.

For those refiners who need more octane than can be achieved from the once-through operation, an additional 8 to 10 RONC can be gained by adding molecular sieve adsorption to the O-T Zeolitic Isomerization process. Molecular sieve adsorption is used to extract the unreacted normal paraffins so they can be recycled to extinction. This approach

*Trademark and/or service mark of UOP.
†Trademark and/or service work of Shell Oil.

Downloaded from Digital Engineering Library @ McGraw-Hill (www.digitalengineeringlibrary.com)
Copyright © 2004 The McGraw-Hill Companies. All rights reserved.
Any use is subject to the Terms of Use as given at the website.

UOP TIP AND ONCE-THROUGH ZEOLITIC ISOMERIZATION PROCESSES

TABLE 9.4.1 Properties of Common Gasoline Components

	Molecular weight	Boiling point,* °F	Density, * lb/gal	RONC
Isobutane	58.1	10.9	4.69	100+
n-butane	58.1	31.1	4.86	93.6
Neopentane	72.1	49.0	4.97	116
Isopentane	72.1	82.2	5.20	92.3
n-pentane	72.1	96.9	5.25	61.7
Cyclopentane	70.0	120.7	6.25	100
2,2-dimethylbutane	86.2	121.5	5.54	91.8
2,3-dimethylbutane	86.2	136.4	5.54	101.7
2-methylpentane	86.2	140.5	5.57	73.4
3-methylpentane	86.2	145.9	5.44	74.5
n-hexane	86.2	155.7	5.48	94.8
Methylcyclopentane	84.2	161.3	6.28	91.3
2,2-dimethylpentane	100.2	174.6	5.64	92.8
Benzene	78.1	176.2	7.36	100+
2,4-dimethylpentane	100.2	176.9	5.64	83.1
Cyclohexane	84.2	177.3	6.53	83
2,2,3-trimethylbutane	100.2	177.6	5.78	112
3,3-dimethylpentane	100.2	186.9	5.81	98
2,3-dimethylpentane	100.2	193.6	5.83	88.5
2,4-dimethylpentane	100.2	194.1	5.68	55
3-methylhexane	100.2	197.5	5.76	65
Toluene	92.1	231.1	7.26	100+
Ethylbenzene	106.2	277.1	7.26	100+
Cumene	120.2	306.3	7.21	100+
1-methyl-2-ethylbenzene	120.2	329.2	7.35	100+
n-decane	142.3	345.2	6.11	−53

*The values for °C and kg/m³ can be found in Table 10.5.1.

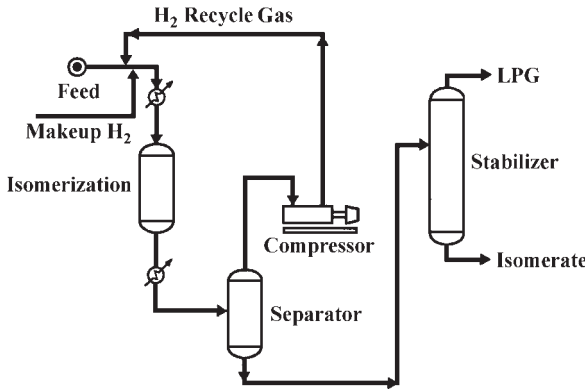

FIGURE 9.4.1 UOP Once-Through Zeolitic Isomerization process.

Downloaded from Digital Engineering Library @ McGraw-Hill (www.digitalengineeringlibrary.com)
Copyright © 2004 The McGraw-Hill Companies. All rights reserved.
Any use is subject to the Terms of Use as given at the website.

UOP TIP AND ONCE-THROUGH ZEOLITIC ISOMERIZATION PROCESSES

of complete isomerization is referred to as UOP's TIP* process. Because O-T Zeolitic Isomerization is an integral part of the TIP process, the ensuing discussion begins with the once-through operation and concludes with a discussion of TIP.

O-T ZEOLITIC ISOMERIZATION PROCESS

Process Chemistry

Thermodynamically, low temperatures are preferred for obtaining maximum amounts of branched paraffins in the reaction product. Operation below 150°C (302°F) for maximum activity requires a catalyst that uses a halide activator. For these catalysts, feed drying is required to eliminate any corrosion or catalyst stability concerns.

The catalyst used in the O-T Zeolitic Isomerization process, however, is based on a strongly acidic zeolite with a recoverable noble-metal component. No external acid activators are used and the catalyst does not produce a corrosive environment. Therefore, feed drying is not necessary.

The catalyst base behaves as an acid of the Brönsted type because it has a high activity for normal-pentane isomerization in the absence of a metal component. At a relatively low hydrogen partial pressure, the carbonium ion concentration generated by the activated low-sodium zeolite is apparently higher than it would have been if the paraffin-olefin equilibrium had been established. This excessive carbonium ion concentration leads to not only high initial conversion but also unstable operation and low selectivity under preferred operating conditions (Fig. 9.4.2). This figure also shows that incorporation of the metal function stabilizes the conversion and lowers the initial activity. These results are to be ascribed to the lower olefin and carbonium ion concentration in the presence of the dual-function catalyst as a result of the paraffin-olefin equilibrium.

The reaction mechanism on the new catalyst is shown in Fig. 9.4.3. Carbonium ions and isoparaffins are generated from normal paraffins by a combination of hydride-ion abstraction and hydride-ion transfer reactions. In the adsorbed state, skeletal rearrangement reactions occur. This reaction is the horizontal path shown in Fig. 9.4.3. Alternatively, while the normal pentane is in the carbonium ion state (*n*P+ or *i*P+), it may surrender a proton to form an olefin, which in turn is hydrogenated to form a paraffin (these two paths are vertical).

Even a minute amount of the noble metal stabilizes the conversion to isopentane, provided that the noble metal is well dispersed and distributed throughout the zeolite (Table 9.4.2). However, in commercial applications, more than the minimum amount of noble metal is required. Normally the catalyst contains a few tenths of a percent of precious metal. Proper catalyst preparation methods and start-up procedures are essential for optimal results.

Process Description

The O-T Zeolitic Isomerization process is a fixed-bed, vapor-phase process for the catalytic isomerization of low-octane normal pentane or normal hexane or both to high-octane isoparaffins. The isomerization reaction is carried out at 245 to 270°C (470 to 520°F) and 21 to 35 kg/cm^2 (300 to 500 lb/in^2 gage) in the presence of hydrogen. Equipment requirements are a reactor vessel, heater, recycle hydrogen compressor, feed-product heat exchanger, product cooler, phase separator drum, and product stabilizer section.

*Trademark and/or service mark of UOP.

Downloaded from Digital Engineering Library @ McGraw-Hill (www.digitalengineeringlibrary.com)
Copyright © 2004 The McGraw-Hill Companies. All rights reserved.
Any use is subject to the Terms of Use as given at the website.

UOP TIP AND ONCE-THROUGH ZEOLITIC ISOMERIZATION PROCESSES

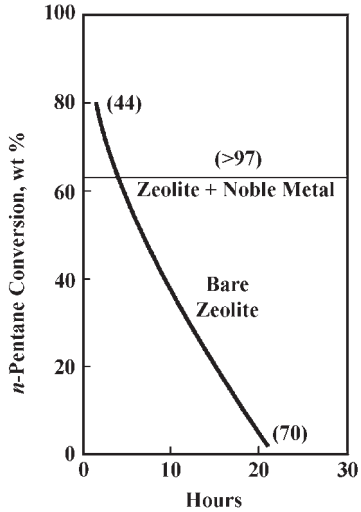

FIGURE 9.4.2 Effect of noble-metal addition on *n*-pentane isomerization. (Selectivity for isopentane overcracking is indicated in parentheses.)

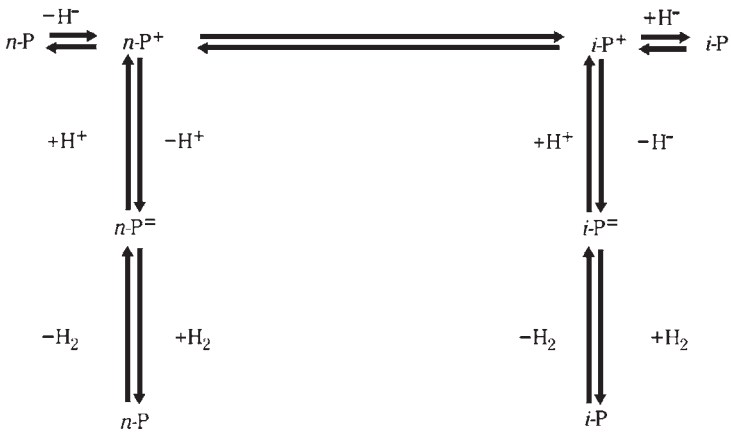

FIGURE 9.4.3 Isomerization reaction path.

A comparison of catalytic reforming and O-T Zeolitic Isomerization appears in Table 9.4.3. A brief discussion about the required equipment from the perspective of converting an existing hydrotreater follows.

Reactors. With catalytic reformers that were originally designed for a weight hourly space velocity (WHSV) comparable to that of the O-T Zeolitic Isomerization process, no major modifications to the reactors are required except to eliminate interstage

Downloaded from Digital Engineering Library @ McGraw-Hill (www.digitalengineeringlibrary.com)
Copyright © 2004 The McGraw-Hill Companies. All rights reserved.
Any use is subject to the Terms of Use as given at the website.

UOP TIP AND ONCE-THROUGH ZEOLITIC ISOMERIZATION PROCESSES

TABLE 9.4.2 Influence of Metal Load on Zeolite on Hydroisomerization of n-Pentane.

mol metal/100 g zeolite	First-order rate constant
0.000	0.12
0.025	1.5
0.25	1.6
2.00	2.0
5.4	2.3

TABLE 9.4.3 Comparison of Catalytic Reforming and O-T Zeolitic Isomerization

	Catalytic reforming	O-T Zeolitic Isomerization
Feed composition	C_7+	C_5-C_6
Feed gravity, °API	52–62	88–90
Operating pressure, kg/cm^2 (lb/in^2 gage)	14–35 (200–500)	21–35 (300–500)
Operating temperature, °C (°F)	About 510 (950)	About 260 (500)
Feed, WHSV	1–5	1–3
H_2/HC ratio, mol/mol	5–10	1–4
H_2, SCFB	500–1700 produced	About 70 required
Heat of reaction	Highly endothermic	Nearly isothermal
Reid vapor pressure, kg/cm^2 (lb/in^2 gage)		
Feed	0.05–0.07 (0.7–1.0)	0.8–1.0 (12–14)
Product	0.2–0.4 (3–6)	0.9–1.1 (13–16)
Catalyst regeneration	Continuous to about 1 year periodic	Every 2 to 3 years

Note: WHSV = weight hourly space velocity; HC = hydrocarbon; SCFB = standard cubic feet per barrel.

heating. Because of the difference in feed densities, the O-T Zeolitic Isomerization catalyst requirement is typically about 20 percent less than the reformer catalyst requirement.

If the O-T Zeolitic Isomerization unit is to be designed for a lower WHSV or if recycle of normal paraffins to obtain the maximum octane increase is desired, converting from internal to external insulation can achieve about a 25 to 30 percent increase in reactor volume. This increase is possible because of the relatively low operating temperature for the O-T Zeolitic Isomerization process; however, the material used to construct the reactor shell should be checked for pressure or temperature limitations.

Compressors. The recycle-compressor capacity for a reformer is usually more than adequate for the O-T Zeolitic Isomerization process. A 25 kg/cm2 (350 lb/in2 gage) reformer will have about twice the capacity required for the O-T Zeolitic Isomerization process. In plants containing two compressors, each with a 50 percent capacity, one compressor can be shut down.

Makeup hydrogen for the O-T Zeolitic Isomerization process can be reformer net gas. If the reformer supplying the hydrogen is a low-pressure unit, a small makeup compressor is required. For a O-T Zeolitic Isomerization unit processing 5000 barrels per day (BPD) of feed, hydrogen makeup is typically about 500,000 standard cubic feet per day (SCF/day).

Downloaded from Digital Engineering Library @ McGraw-Hill (www.digitalengineeringlibrary.com)
Copyright © 2004 The McGraw-Hill Companies. All rights reserved.
Any use is subject to the Terms of Use as given at the website.

UOP TIP AND ONCE-THROUGH ZEOLITIC ISOMERIZATION PROCESSES

Heaters and Heat Exchangers. Heat exchange equipment and heaters are usually more than adequate. Interstage reheaters between reactors are not required because the isomerization reaction is mildly exothermic.

Feed Pump. Because of differences in feed gravity, feed rate, vapor pressure, and possible net positive suction head (NPSH), a new feed pump may be required.

Stabilizer System. In the O-T Zeolitic Isomerization process, the amount of light ends produced is substantially less than in the reforming process. In any case, where a reformer has been converted to an O-T Zeolitic Isomerization unit, the stabilizer feed rate is higher even though the stabilizer overhead product is lower than in the reforming operation. The small amount of light ends plus a bottoms product with a higher vapor pressure may dictate an increased reflux rate or a column retray or both.

Commercial Information

The need for a high-octane product to replace the octane lost with lead phaseout and benzene reduction in the gasoline pool has placed more emphasis on isomerization. As previously noted, the attractiveness of the O-T Zeolitic Isomerization process is that it can be adapted to an existing idle hydrotreater, catalytic reformer, or other hydroprocessing unit with minimal investment. The actual time to modify a unit ranges from a few days to a few weeks.

Commercial Installations. As of early 2002, more than 30 O-T Zeolitic Isomerization units have been commissioned to process 1000 to 13,500 BPD of feed. About half of these are catalytic-reformer or hydrotreater conversions. One unit was assembled from assorted surplus refinery equipment. Of the conversions, one unit is arranged so that it can be operated as either a reformer or a O-T Zeolitic Isomerization unit by switching a few spool pieces.

The oldest of the converted units started up in 1970 in La Spezia, Italy. This unit was integrated with a catalytic reformer so that both units have a common recycle-gas compressor system, product-cooling train, and stabilizer section. Combinations of this sort often result in capital savings of 20 to 40 percent compared to stand-alone isomerization and reforming units. In 10 years of operation, the catalyst in the La Spezia unit was regenerated in situ four times. Typical cycle lengths for O-T Zeolitic Isomerization units are 3 to 4 years.

Typical Performance. Paraffin isomerization is limited by thermodynamic equilibrium so that a once-through, or single-pass, isomerization reactor provides only partial conversion of the normal paraffins. In the reactor, C_5-C_6 paraffins are isomerized to a near-equilibrium mixture, and aromatics become saturated to naphthenes, which, in turn, are partially converted into paraffins. Olefins in the feed are saturated, and C_7+ paraffins are mostly hydrocracked to C_3 to C_6 paraffins.

Tables 9.4.4 and 9.4.5 provide a summary of typical O-T Zeolitic Isomerization yields, product properties, conversion costs, utility requirements, and overall operating costs. Typical C_5+ isomerate yield is 97 to 98 liquid volume percent (LV %) on feed and the octane number is increased by about 10 to 12, resulting in an isomerate quality of 77 to 80 RONC.

Usually no new major equipment is required when a reformer is converted to an O-T Zeolitic Isomerization unit of the same feed capacity. Thus, the only costs are for new piping and instrumentation, engineering, and a charge of O-T Zeolitic Isomerization catalyst. For a unit with a feed rate of 5000 BPD, capital costs will total $3.0 to $4.5 million. This

Downloaded from Digital Engineering Library @ McGraw-Hill (www.digitalengineeringlibrary.com)
Copyright © 2004 The McGraw-Hill Companies. All rights reserved.
Any use is subject to the Terms of Use as given at the website.

UOP TIP AND ONCE-THROUGH ZEOLITIC ISOMERIZATION PROCESSES

TABLE 9.4.4 Typical Estimated Performance, O-T Zeolitic Isomerization Unit, 10,000 BPD

Component	Fresh feed to reactor	Product
Hydrogen consumption, m^3/h (1000 SCF/day)	2018 (1710)	—
Light gas yield, m^3/h (1000 SCF/day):		
C_1	—	333 (283)
C_2	—	180 (152)
C_3	—	292 (248)
C_4 + streams, LV % on feed:		
iC_4	0.10	2.50
nC_4	0.58	1.41
iC_5	16.84	30.39
nC_5	29.07	16.17
Cyclo-C_5	1.69	1.24
2,2-dimethylbutane	0.51	8.26
2,3-dimethylbutane	1.93	3.74
2-methylpentane	12.08	14.43
3-methylpentane	8.80	9.21
nC_6	19.35	8.24
Methylcyclopentane	1.95	3.35
Cyclo-C_6	3.41	0.96
Benzene	1.75	0.0
C_7	1.94	0.97
Total	100.00	100.87
C_4+ properties:		
Specific gravity	0.659	0.648
Reid vapor pressure, kg/cm^3 (lb/in^2)	0.8 (10.8)	1.0 (14.2)
Octane number:		
RON, clear	68.1	79.5
RON + 3 cm^3 TEL/U.S. gal	88.4	95.5
MON, clear	66.4	77.6
MON + 3 cm3 TEL/U.S. gal	87.3	96.3

Note: BPD = barrels per day; SCF = standard cubic feet; RON = research octane number; MON = motor octane number; TEL = tetraethyl lead; *i* = iso; *n* = normal.

amount is only about half of the cost of a grassroots installation. Expected catalyst life is 10 to 15 years.

TIP PROCESS

General Description

Some refiners need more octane from the LSR naphtha fraction than is possible from the O-T Zeolitic Isomerization process. As previously noted, the TIP process combines the O-T Zeolitic Isomerization process with UOP's naphtha IsoSiv process to yield an 87 to 90 RONC product, an improvement of approximately 20 numbers. The TIP unit can be built grassroots, or a UOP IsoSiv unit can be added to an existing O-T Zeolitic Isomerization unit to convert it to a TIP unit. In this type of revamp, generally all existing equipment can be used.

Downloaded from Digital Engineering Library @ McGraw-Hill (www.digitalengineeringlibrary.com)
Copyright © 2004 The McGraw-Hill Companies. All rights reserved.
Any use is subject to the Terms of Use as given at the website.

UOP TIP AND ONCE-THROUGH ZEOLITIC ISOMERIZATION PROCESSES

TABLE 9.4.5 O-T Zeolitic Isomerization Conversion Economics and Performance*

Total capital required, $/BPSD	750
Utilities, per BPSD feed:	
Fuel consumed (90% efficiency), million kcal/h (million Btu/h)	0.0006 (0.0025)
Water at 17°C rise, m^3/day (gal/min)	0.33 (0.06)
Power, kWh	0.05
Steam at 10.5 kg/cm^2 (150 lb/in^2 gage), saturated, kg/h (lb/h)	0.5 (1.1)
Hydrogen consumption, m^3/day (SCF/h)	2.7–6.1 (4–9)
Typical performance:	
Isomerate, RONC	77–80
C_5+ isomerate yield, LV %	97–98
Catalyst expected life, years	10–15

*Basis: Battery limits; U.S. Gulf Coast, 2001, 4000–6000 BPSD, including new stabilizer, new piping and instrumentation, engineering, and catalyst.

The TIP process uses adsorption technology to remove and recycle the unconverted normal paraffins. During the adsorption step, a shape-selective molecular sieve removes all the unconverted normal paraffins from the isomerate to allow the branched-chain isomers to pass through. These adsorbed normals are then desorbed by stripping with recycle hydrogen and passed directly into the isomerization reactor. Because the entire process is carried out in the vapor phase, utility requirements are low. The entire process operates at a constant low pressure. The presence of hydrogen during the desorption step prevents the buildup of coke on the adsorbent. Like the catalyst, the adsorbent can be regenerated in situ if an upset condition causes coking.

Process Description of TIP

The TIP process is a constant-pressure vapor-phase process operating at a moderate pressure, 14 to 35 kg/cm^2 (200 to 500 lb/in^2 gage) range, and moderate temperatures, 245 to 370°C (475 to 700°F). Hydrogen at a sufficient partial pressure must be present during isomerization to prevent coking and deactivation of the catalyst. A simplified schematic flow sheet is shown in Fig. 9.4.4.

Hydrotreated fresh feed is mixed with the hot recycle stream of hydrogen and C_5-C_6 normal paraffins prior to entering the isomerization reactor. A small stream of makeup hydrogen is also added to the feed of the reactor. The reactor effluent, at near-equilibrium isomerization composition, is cooled and flashed in a separator drum. The liquid product, which contains some unconverted low-octane normal paraffins, is vaporized and passed into a bed of molecular-sieve adsorbent, where the straight-chain normals are adsorbed for recycle back to the isomerization reactor. The branched-chain isomers and cyclic hydrocarbons, which have molecular diameters greater than the diameter of pores in the molecular-sieve adsorbent, cannot be adsorbed and exit from the absorbent bed essentially free of normal paraffins. This isomerate product is stabilized as required to remove any excess hydrogen, 1 to 2 percent cracked products, and any propane or butane introduced with the makeup hydrogen. The hydrogen purge gas from the separator is circulated by means of a recycle compressor through a heater and is then used as a purge gas to strip the normal paraffins previously adsorbed on the molecular-sieve adsorbent bed. The hydrogen plus desorbed normals is then mixed with the fresh feed upstream of the isomerization reactor. The isomerization section and the adsorption section of a TIP unit share a common recycle hydrogen loop.

Feedstocks that contain an appreciable amount of heptanes or nonnormal components use an alternative feed point (Fig. 9.4.4). The fresh feed enters the system just upstream of

Downloaded from Digital Engineering Library @ McGraw-Hill (www.digitalengineeringlibrary.com)
Copyright © 2004 The McGraw-Hill Companies. All rights reserved.
Any use is subject to the Terms of Use as given at the website.

UOP TIP AND ONCE-THROUGH ZEOLITIC ISOMERIZATION PROCESSES

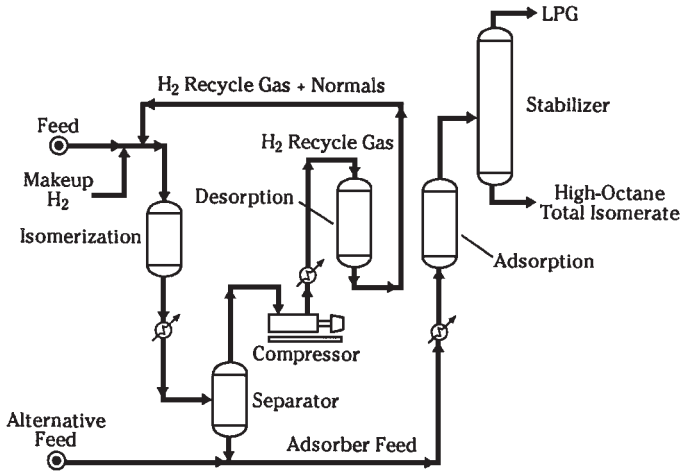

FIGURE 9.4.4 TIP flow scheme.

the adsorbers rather than at the isomerization reactor. This feed-entry point allows the nonnormal components and isoheptanes to pass into the final isomerate product without first passing through the isomerization reactor, where some of the heptanes are hydrocracked to liquefied petroleum gas (LPG). With feedstocks having a low normal-paraffin content, it is also more efficient to have the fresh feed enter the system just upstream of the adsorbers to recover the nonnormal components. Only the adsorbed normal paraffins are then sent to the resulting smaller isomerization reactor.

Feeds with high levels of benzene can be processed initially in either the reactor section or the adsorption section. Benzene is saturated completely to cyclohexane in the reactor section, thereby producing a benzene-free isomerate product. For feeds with high levels of benzene, presaturation in a separate reactor at a high space velocity is used to remove the heat of saturation from the TIP reactor. This technology is known as TIP-Plus.* Sending the feed to the adsorption section allows the high-octane benzene to pass into the isomerate product. For feeds that are best processed in the adsorber section first but need to minimize benzene in the product, the saturation-section effluent can be sent to the adsorption section of the TIP-Plus process. The refiner needs to evaluate both octane and benzene target levels to determine the proper feed point.

The TIP unit is normally designed with the capability for an in situ oxidative regeneration of the catalyst and the adsorbent to minimize downtime in the event of an unexpected upset that might coke the catalyst or the adsorbent.

Commercial Information

As of early 2002, more than 30 TIP units were in operation worldwide. Tables 9.4.6 and 9.4.7 provide a summary of typical TIP process yields, product properties, capital costs, utility requirements, and overall operating costs. A 0.6 power factor applied to the ratio of fresh-feed rates can be used with the cost given in Table 9.4.7 for a quick estimate of the

*Trademark and/or service mark of UOP.

Downloaded from Digital Engineering Library @ McGraw-Hill (www.digitalengineeringlibrary.com)
Copyright © 2004 The McGraw-Hill Companies. All rights reserved.
Any use is subject to the Terms of Use as given at the website.

UOP TIP AND ONCE-THROUGH ZEOLITIC ISOMERIZATION PROCESSES

TABLE 9.4.6 Typical Estimated Yields for the TIP Process, 10,000 BPD

Component	Fresh feed to reactor	Adsorber feed	Recycle paraffins	Isomerate product
H_2 consumption, m^3/h (1000 SCF/day)	2175 (1844)	—	—	—
Light gas yield, m^3/h (1000 SCF/day):				
C_1	—	190 (161)	—	—
C_2	—	81 (69)	—	—
C_3	—	311 (264)	—	—
C_4+ streams, BPSD:				
iC_4	10	337	194	288
nC_4	58	1,035	1,247	136
iC_5	1,684	5,254	1,446	4,523
nC_5	2,907	3,188	3,411	142
Cyclo-C_5	169	153	33	132
2,2-dimethylbutane	51	1,052	215	910
2,3-dimethylbutane	193	528	98	458
2-methylpentane	1,208	2,042	368	1,771
3-methylpentane	880	1,307	230	1,134
nC_6	1,935	1,272	1,301	22
Methylcyclopentane	195	397	68	344
Cyclo-C_6	341	113	19	98
Benzene	175	0	0	0
C_7	194	103	15	89
Total	10,000	16,781	8,645	10,047
C_4+ properties:				
Specific gravity	0.659	0.642	0.632	0.640
Reid vapor pressure, kg/cm^2 (lb/in^2)	0.8 (10.8)	1.2 (16.7)	1.4 (20.6)	1.3 (19.2)
Octane number:				
RON, clear	68.1	79.7	70.7	88.3
RON+3 cm^3 TEL/U.S. gal	88.4	95.6	90.1	100.9
MON, clear	66.4	77.7	69.4	85.8
MON+3 cm3 TEL/U.S. gal	87.3	96.4	90.4	102.5

investment costs for different-size TIP units. Utilities and catalyst-adsorbent requirements tend to increase in direct proportion to an increase in fresh feed rate.

Wastes and Emissions

No wastes or emissions are created by the O-T Zeolitic Isomerization or TIP processes. Product stabilization, however, does result in small amounts of LPG ($C_3 + C_4$, rich in iC_4) and in stabilizer vent ($H_2 + C_1 + C_2$) products. The stabilizer vent products are usually used as fuel. The LPG is a valuable by-product that is blended elsewhere in the refinery.

Downloaded from Digital Engineering Library @ McGraw-Hill (www.digitalengineeringlibrary.com)
Copyright © 2004 The McGraw-Hill Companies. All rights reserved.
Any use is subject to the Terms of Use as given at the website.

UOP TIP AND ONCE-THROUGH ZEOLITIC ISOMERIZATION PROCESSES

TABLE 9.4.7 TIP Process: Economics and Performance

Economics:	
Investment,* $/BPSD	3200–4000
Catalyst and adsorbent inventory, $/BPSD	240
Utilities:	
Fuel consumed (90% furnace efficiency), million kcal/h (million Btu/h)	7.8 (31)
Water at 17°C rise (31°F), m^3/day (gal/min)	2159 (396)
Power, kWh	1455
Steam at 10.5 kg/cm^2 (150 lb/in^2 gage) kg/h (lb/h)	2.8 (6.2)
Hydrogen consumption (70% hydrogen purity), 1000 m^3/day (1000 SCF/h)	17.7 (26)

*Battery limits, U.S. Gulf Coast, 2001, feed rate 4000–6000 BPSD.

Downloaded from Digital Engineering Library @ McGraw-Hill (www.digitalengineeringlibrary.com)
Copyright © 2004 The McGraw-Hill Companies. All rights reserved.
Any use is subject to the Terms of Use as given at the website.

Downloaded from Digital Engineering Library @ McGraw-Hill (www.digitalengineeringlibrary.com)
Copyright © 2004 The McGraw-Hill Companies. All rights reserved.
Any use is subject to the Terms of Use as given at the website.

Source: HANDBOOK OF PETROLEUM REFINING PROCESSES

CHAPTER 9.5
UOP PAR-ISOM PROCESS

Nelson A. Cusher
UOP LLC
Des Plaines, Illinois

Light straight-run (LSR) naphtha fractions are predominantly C_5's and C_6's. Some C_7's are also present. They are highly paraffinic and have clear research octane numbers (RONC) usually in the 60s. This fraction, which constitutes 10 percent of a typical gasoline pool in the United States, is usually upgraded with paraffin isomerization technology.

The use of paraffin isomerization technology to upgrade the octane of light naphtha streams has been known to the refining industry for many years and has gained importance since the onset of the worldwide reduction in the use of lead antiknock compounds and benzene. This technology continues to be important in view of current U.S. and European legislation on reformulated gasoline.

The most cost-effective means to upgrade an LSR feedstock in a grassroots situation is the UOP* Penex* process. This process relies on a highly active chlorided alumina catalyst to produce an isomerate product with a RONC of 82 to 85. However, the catalyst is sensitive to contaminants and is not regenerable.

Alternatively, refiners with idle processing equipment such as old catalytic reformers or hydrodesulfurization units can consider converting this equipment to the UOP Once-Through (O-T) Zeolitic Isomerization process (formerly known as the Shell Hysomer† process). These conversions can be accomplished quickly and at low cost to provide a 10 to 12 octane number increase for the light naphtha. Zeolitic catalysts are tolerant of contaminants and are regenerable, but operate at relatively high temperatures that limit the maximum octane that can be achieved.

With the commercialization of the UOP Par-Isom process, the refiner has another option for light paraffin isomerization. The key to this new process is the LPI-100 catalyst, an innovative, high-performance sulfated metal oxide catalyst with activity approaching that of chlorided alumina catalysts, but with the benefit of being both robust and regenerable. The basic formulation for LPI-100 catalyst was originally developed by Cosmo Research Institute and Mitsubishi Heavy Industries in Japan. With the UOP Par-Isom process, an LSR feedstock can be upgraded to 79 to 82 RONC.

*UOP, Penex, Par-Isom, LPI-100, and HS-10 are service marks and/or trademarks of UOP.
† Hysomer is a service mark and/or trademark of Shell Oil.

Downloaded from Digital Engineering Library @ McGraw-Hill (www.digitalengineeringlibrary.com)
Copyright © 2004 The McGraw-Hill Companies. All rights reserved.
Any use is subject to the Terms of Use as given at the website.

UOP PAR-ISOM PROCESS

PROCESS DISCUSSION

The UOP Par-Isom process is specifically designed for the catalytic isomerization of pentanes, hexanes, and mixtures thereof. The reactions take place in the presence of hydrogen, over a fixed bed of catalyst, and at operating conditions that promote isomerization and minimize hydrocracking. The unit operates at moderate temperature and pressure.

Ideally, an isomerization catalyst would convert all the feed paraffins to the high-octane-number branched structures: nC_5 to isopentane and nC_6 to 2,2- and 2,3-dimethylbutane. These reactions are controlled by a thermodynamic equilibrium that is more favorable at low temperature. The Penex process operates at a lower temperature than the Par-Isom process, which in turn operates at a lower temperature than the Once-Through Zeolitic Isomerization process. Consequently, the Penex process produces the highest product octane, followed by the Par-Isom process, with the Once-Through Zeolitic Isomerization process offering the lowest product octane.

Table 9.5.1 shows typical charge and product compositions for a C_5-C_6 Par-Isom unit. With C_5 paraffins, interconversion of normal pentane and isopentane occurs. The C_6 paraffin isomerization is somewhat more complex. Since the formation of 2- and 3-methylpen-

TABLE 9.5.1 Typical Estimated Performance, Par-Isom Isomerization Unit 10,000 BPD

Hydrogen consumption	1,602,000 SCF/day
Light-gas yield	
C_1	137,000 SCF/day
C_2	67,000 SCF/day
C_3	246,000 SCF/day

Component	Fresh feed to reactor	Product
Flow rate, BPD		
IC_4	10	278
NC_4	58	135
IC_5	1,684	3,185
NC_5	2,907	1,368
Cyclo-C_5	169	169
2,2-Dimethylbutane	51	984
2,3-Dimethylbutane	193	461
2-Methylpentane	1,208	1,555
3-Methylpentante	880	903
NC_6	1,935	572
Methylcyclopentane	195	216
Cyclo-C_6	341	121
Benzene	175	0
C_7	194	86
Total	**10,000**	**10,033**
C_4+ properties:		
Specific gravity	0.659	0.647
Reid vapor pressure, kg/cm^2 (lb/in^2 absolute)	0.8 (10.8)	1.0 (14.6)
Octane number		
RONC, clear	68.1	81.8
RONC + 3 cm^3 tetraethyl lead/U.S. gal	88.4	97.1
MONC, clear	66.4	79.9
MONC + 3 cm^3 tetraethyl lead/U.S. gal	87.3	97.8

Downloaded from Digital Engineering Library @ McGraw-Hill (www.digitalengineeringlibrary.com)
Copyright © 2004 The McGraw-Hill Companies. All rights reserved.
Any use is subject to the Terms of Use as given at the website.

UOP PAR-ISOM PROCESS

tane and 2,3-dimethylbutane is limited by equilibrium, the net reaction involves mainly the conversion of normal hexane to 2,2-dimethylbutane. All the feed benzene is hydrogenerated to cyclohexane, and a thermodynamic equilibrium is established between methylcyclopentane and cyclohexane. The octane rating shows an increase of some 13.7 numbers.

PROCESS FLOW SCHEME

The Par-Isom process flow scheme is shown in Fig. 9.5.1 and is identical to the O-T Zeolitic Isomerization process flow scheme. In fact, since the two processes operate over the same pressure range, LPI-100 catalyst is a drop-in replacement for HS-10 catalyst that results in a 2 to 3 octane number improvement.

The light naphtha feed is combined with makeup and recycle hydrogen before being directed to the charge heater where the reactants are heated to reaction temperature. A fired heater is not required in the Par-Isom process, due to the much lower reaction temperature needed for LPI-100 catalyst than for zeolitic catalysts. Hot oil or high-pressure steam can be used as the heat source in this exchanger. The heated combined feed is then sent to the isomerization reactor.

The reactor effluent is cooled and then sent to a product separator where the recycle hydrogen is separated from the other products. Recovered recycle hydrogen is directed to the recycle compressor and then returned to the reaction section. The liquid product is sent to a stabilizer column where the light ends and dissolved hydrogen are removed. The stabilized isomerate product can be sent directly to gasoline blending.

Alternatively, the stabilizer bottoms can be fractionated in a deisohexanizer column to concentrate the normal hexane and low-octane methylpentanes into a sidecut stream. This sidecut stream combines with the fresh feed before entering the Par-Isom reactor. The deisohexanizer column overhead, which is primarily isopentane, 2,2-dimethylbutane, and 2,3-dimethylbutane, is recovered for gasoline blending. A small bottoms drag stream, consisting of C_6 naphthenes and C_7's, is also removed from the deisohexanizer column and used for gasoline blending or as reformer feed. Product octanes in the range of 85 to 87 RONC can be achieved with this flow scheme.

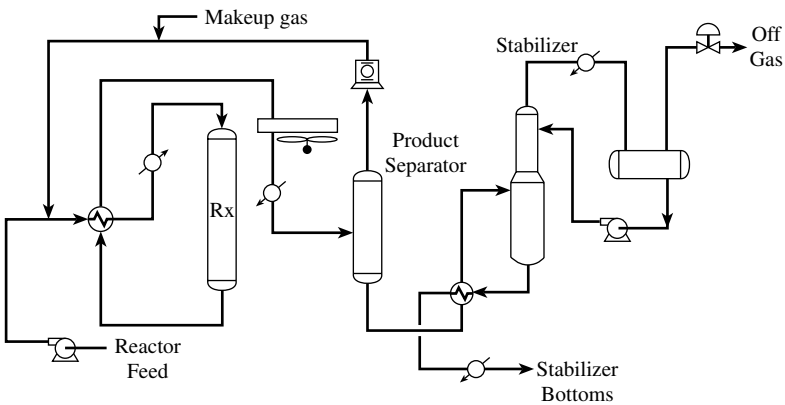

FIGURE 9.5.1 Par-Isom process flow scheme.

Downloaded from Digital Engineering Library @ McGraw-Hill (www.digitalengineeringlibrary.com)
Copyright © 2004 The McGraw-Hill Companies. All rights reserved.
Any use is subject to the Terms of Use as given at the website.

UOP PAR-ISOM PROCESS

CATALYST INFORMATION

Sulfated metal oxide catalysts can be considered to be solid superacids and exhibit high activity for paraffin isomerization reactions. Sulfated metal oxide catalysts form the basis of the new generation of isomerization catalysts that have been actively discussed in the scientific literature in recent years. These catalysts are most commonly tin oxide (SnO_2), zirconium oxide (ZrO_2), titanium oxide (TiO_2), or ferric oxide (Fe_2O_3) that have been sulfated by the addition of sulfuric acid or ammonium sulfate. Sulfated alumina is not an active catalyst for hydrocarbon reactions.

Sulfated metal oxide catalysts have now been commercialized with the introduction of UOP's LPI-100 catalyst. Activity of this new catalyst is considerably higher than that of traditional zeolitic catalysts, equivalent to about 85°C (150°F) lower reaction temperature. The lower reaction temperature allows for significantly higher product octane, about 82 RONC for a typical feed or 3 numbers higher than a zeolitic catalyst. LPI-100 catalyst is robust and is not permanently deactivated by water or oxygenates in the feedstock. It is also fully regenerable by using a simple oxidation procedure that is comparable to that practiced for zeolitic catalysts. The high activity of the sulfated metal oxide catalyst makes it an ideal candidate for (1) revamping existing zeolitic isomerization units for higher capacity, (2) revamping idle hydrotreaters and reformers for isomerization service, or (3) new units where the full performance advantage of chlorided alumina catalysts is not required or where catalyst stability due to feedstock contaminants is a concern.

COMMERCIAL INFORMATION

As of 2002, eight Par-Isom units have been commissioned that process between 900 and 7500 BPD of feed. Three additional units are in the design/construction phase.

Table 9.5.2 provides a summary of Par-Isom investment costs and utility requirements. Information is provided for a grassroots unit. Note that no new major equipment is required when an O-T Zeolitic Isomerization unit is converted to an O-T Par-Isom unit of the same feed capacity.

WASTES AND EMISSIONS

No wastes or emissions are created by the Par-Isom* process. Product stabilization, however, does result in small amounts of liquefied petroleum gas (LPG) ($C_3 + C_4$, rich in IC_4) and stabilizer overhead ($H_2 + C_1 + C_2$) products. The stabilizer overhead products are usually used as fuel. The LPG is a valuable by-product that is blended elsewhere in the refinery.

Downloaded from Digital Engineering Library @ McGraw-Hill (www.digitalengineeringlibrary.com)
Copyright © 2004 The McGraw-Hill Companies. All rights reserved.
Any use is subject to the Terms of Use as given at the website.

UOP PAR-ISOM PROCESS

TABLE 9.5.2 O-T Par-Isom Process Economics and Performance

Economics	
New unit cost, $/BPSD	870
Utilities, per BPSD feed	
Electric power (new unit only), kW	0.07
Fuel consumed (conversion only @ 90% efficiency), kcal/h (Btu/h)	61 (240)
Water 17°C rise, m^3/day (gal/min)	0.16 (0.03)
MP steam, kg/h (lb/h)	0.46 (1.00)
LP steam, kg/h (lb/h)	0.55 (1.21)
Hydrogen consumption, m^3/day (SCF/h)	2.7–6.1 (4–9)
Typical performance	
Isomerate research octane number, clear	79–82
C_5+ isomerate yield, LV %	97–98
Catalyst expected life, years	5–10
Basis: Battery limits; U.S. Gulf Coast, 2002; 10,000 BPSD feed, including stabilizer	

Downloaded from Digital Engineering Library @ McGraw-Hill (www.digitalengineeringlibrary.com)
Copyright © 2004 The McGraw-Hill Companies. All rights reserved.
Any use is subject to the Terms of Use as given at the website.

Downloaded from Digital Engineering Library @ McGraw-Hill (www.digitalengineeringlibrary.com)
Copyright © 2004 The McGraw-Hill Companies. All rights reserved.
Any use is subject to the Terms of Use as given at the website.

Source: HANDBOOK OF PETROLEUM REFINING PROCESSES

P · A · R · T · 10

SEPARATION PROCESSES

Downloaded from Digital Engineering Library @ McGraw-Hill (www.digitalengineeringlibrary.com)
Copyright © 2004 The McGraw-Hill Companies. All rights reserved.
Any use is subject to the Terms of Use as given at the website.

Downloaded from Digital Engineering Library @ McGraw-Hill (www.digitalengineeringlibrary.com)
Copyright © 2004 The McGraw-Hill Companies. All rights reserved.
Any use is subject to the Terms of Use as given at the website.

Source: HANDBOOK OF PETROLEUM REFINING PROCESSES

CHAPTER 10.1

CHEVRON LUMMUS GLOBAL ON-STREAM CATALYST REPLACEMENT TECHNOLOGY FOR PROCESSING HIGH-METAL FEEDS

David E. Earls
Chevron Lummus Global
Richmond, California

INTRODUCTION

In processing less expensive, high-metal feeds, the need for frequent catalyst change-outs can make conventional fixed-bed residuum hydrotreating technology uneconomical. Chevron Lummus Global (CLG) developed on-stream catalyst replacement (OCR) to remove metals from feed before it is hydrotreated in fixed-bed residuum desulfurization (RDS) units. The ability to add and withdraw catalyst from the high-pressure, moving-bed OCR reactor while it is onstream gives refiners the opportunity to process heavier, high-metal feeds or to achieve deeper desulfurization while maintaining fixed-bed run lengths and improving product properties.

DEVELOPMENT HISTORY

Development of the OCR process started in 1979 as part of the research on new reactor concepts which might be applied to synthetic fuels and heavy oil upgrading. Most of these alternative fuels are difficult to upgrade to transportation fuels. Typically high in nitrogen, sulfur, and metals, they tend to deactivate catalyst very rapidly. Consequently, conventional fixed-bed hydrotreating processes can not upgrade these feedstocks economically. CLG determined that if fresh catalyst could be continually moved through a reactor, then catalytic activity could be maintained without shutting down the unit. Theoretically, the metal capacity of the catalyst would be fully utilized in the OCR unit, thus reducing the necessary size of the downstream RDS unit and lowering total operating costs.

Downloaded from Digital Engineering Library @ McGraw-Hill (www.digitalengineeringlibrary.com)
Copyright © 2004 The McGraw-Hill Companies. All rights reserved.
Any use is subject to the Terms of Use as given at the website.

CHEVRON LUMMUS GLOBAL ON-STREAM CATALYST REPLACEMENT
TECHNOLOGY FOR PROCESSING HIGH-METAL FEEDS

Using cold model and catalytic testing, CLG showed that with the proper equipment design these process improvements could be obtained. The feasibility of the process was proved during the operation of a 200 barrel per day (BPD) demonstration unit a ChevronTexaco's Richmond refinery in 1985. Critical to the design's success was the proof that the valves could operate reliably at the high temperatures and pressures required for residuum upgrading.

PROCESS DESCRIPTION

CLG's OCR process is a countercurrent, moving-bed technology that removes metals and other contaminants from feedstocks prior to processing in fixed-bed residuum hydrotreating reactors. In the OCR rector, residuum and hydrogen flow upward through the reactor, and the catalyst flows downward. This process removes the metals and carbon residue that cause plugging and catalyst deactivation in conventional fixed-bed RDS units. Figure 10.1.1 shows the OCR reactor system, including the equipment used to transfer catalyst into and out of the reactor. OCR reactors can be paired and serve as pretreatment beds for two parallel trains of fixed-bed reactors. In this case, only one set of catalyst transfer vessels is needed to move catalyst for two OCR reactors.

Caalyst Transfer System

In a parallel train system, catalyst transfer is done, on average, once a week to and from each OCR reactor. The amount of catalyst transferred varies from 1.5 to 8 percent of the OCR reactor catalyst capacity. The quantity removed is dictated by the nickel and vanadium content of the feed and the metals concentration on the removed catalyst. The transfer rate is adjusted to allow for changes in operating requirements. Once the requirements are defined, the catalyst is added and withdrawn batchwise on a regular schedule to maintain the required OCR activity.

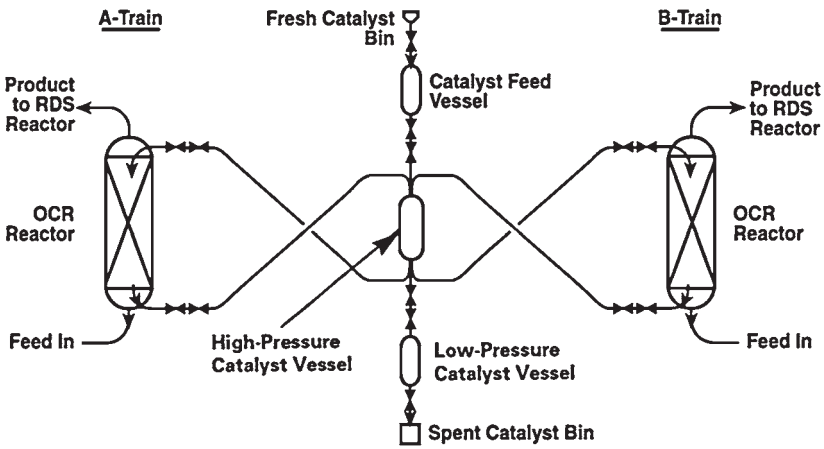

FIGURE 10.1.1 OCR reactor system. CLG's OCR technology adds and removes catalysts from a high-pressure reactor while it is operating, thus providing refiners the opportunity to process less expensive, high-metal feeds.

Downloaded from Digital Engineering Library @ McGraw-Hill (www.digitalengineeringlibrary.com)
Copyright © 2004 The McGraw-Hill Companies. All rights reserved.
Any use is subject to the Terms of Use as given at the website.

CHEVRON LUMMUS GLOBAL ON-STREAM CATALYST REPLACEMENT
TECHNOLOGY FOR PROCESSING HIGH-METAL FEEDS

All the steps required to transfer the catalyst are controlled by a computer-driven, automatic sequencer. Use of the automatic sequencer minimizes the need for operator attention and ensures consistent adherence to all necessary procedures. Operation of the OCR catalyst transfer system is easily monitored by the existing RDS board operator.

Catalyst transfer in and out of the OCR reactor is accomplished in a series of steps which do not interrupt the operation of the unit:

1. Fresh catalyst is transferred by gravity into the low-pressure catalyst feed vessel.
2. There, flush oil (usually a heavy gas oil) is added, and the mixture is transferred as a slurry to the high-pressure catalyst vessel (HPCV).
3. The low-pressure catalyst feed vessel is then isolated, and the pressure in the HPCV is equalized with the top of the OCR reactor.
4. The fresh catalyst is then transferred as a slurry to the top of the OCR reactor.
5. Once the transfer is complete, as indicated by the level in the HPCV, the double isolation valves are flushed to remove catalyst, and the HPCV is isolated from the system.

Spent catalyst is removed from the bottom of the reactor in a similar manner:

1. The HPCV is pressure-equalized with the bottom of the OCR reactor.
2. The spent catalyst is moved as a slurry in the feed residuum from the bottom of the reactor. Once the desired amount of catalyst has been transferred, as indicated by the level in the HPCV, the transfer is stopped and the valves and lines are flushed with oil.
3. The double isolation valves are closed, and the HPCV is isolated from the OCR reactor and depressurized. The spent catalyst is washed of residuum and cooled.
4. The catalyst is transferred as a slurry to the low-pressure catalyst vessel, where the flush oil is drained.
5. The spent catalyst flows by gravity into the spent catalyst bin for disposal.

Since the catalyst is transferred in a low-velocity oil slurry, catalyst attrition is prevented and the system's lines and valves are protected from erosion. OCR lines are smaller than main process lines, and special full port valves are used in the catalyst transfer lines. These valves are flushed clear of catalyst before closing, to minimize valve wear.

OCR Reactor

A schematic drawing of the OCR reactor is shown in Fig. 10.1.2. The catalyst bed in the OCR unit is essentially a fixed bed, which intermittently moves down the reactor. The catalyst level in the OCR reactor is monitored by a level detector at the top of the reactor. As fresh catalyst is added at the top of the reactor, residuum is fed into the bottom. Both move through the reactor in a countercurrent flow, causing the dirtiest, most reactive residuum to contact the oldest catalyst first. The upflow of the residuum through the OCR reactor slightly expands the catalyst bed. This slight expansion enhances residuum/catalyst contact, minimizes reactor plugging, and creates a consistent pressure drop, thus providing for optimum flow patterns through the reactor. Meanwhile, the fully spent OCR catalyst is removed at the bottom of the reactor.

The specially designed cone at the bottom of the reactor allows for plug flow of the catalyst to the removal port at the bottom of the reactor. This plug flow ensures that the most metal-loaded, least active catalyst is removed from the reactor. Consequently, catalyst activity is maximized and cost is minimized.

Downloaded from Digital Engineering Library @ McGraw-Hill (www.digitalengineeringlibrary.com)
Copyright © 2004 The McGraw-Hill Companies. All rights reserved.
Any use is subject to the Terms of Use as given at the website.

CHEVRON LUMMUS GLOBAL ON-STREAM CATALYST REPLACEMENT
TECHNOLOGY FOR PROCESSING HIGH-METAL FEEDS

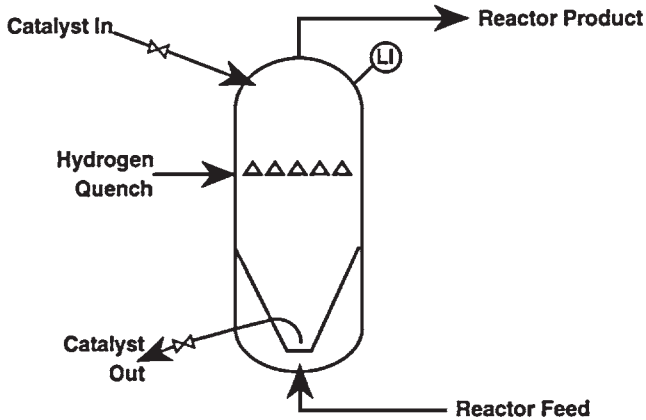

FIGURE 10.1.2 OCR reactor details. The countercurrent flow of reactants and catalyst through the OCR reactor ensures that only the most nearly spent catalyst is removed, thereby minimizing catalyst usage and cost.

Bed plugging is one of the most common causes for premature shutdown of fixed-bed hydroprocessing units. Particulates and reactive metals depositing on the top layers of the reactor cause an increase in pressure drop and maldistribution of the liquid and gas flow. This, in turn, can lead to localized hot spots and rapid coke formation. Two features of the OCR process dramatically reduce the severity of this problem in downstream fixed-bed units:

1. The most reactive feed metals are deposited on the OCR catalyst and do not enter the fixed-bed unit.
2. Particulate material in the feed is not retained in the OCR bed, but passes through to the fixed-bed unit.

Separating the problems of particulates and reactive metals allows the refiner to optimize catalyst grading for the removal of particulate material in the downstream fixed-bed units. As a result, the problem of metal or coke fouling in the RDS unit is largely neutralized by the high hydrodemetallization (HDM) catalyst activity in the OCR unit.

OCR units operate at the same temperature (approximately 730°F) and pressure (approximately 2000 lb/in^2) as their downstream RDS counterparts. Consequently, integrating OCR into the processing scheme is easy and efficient because it can use the same recycle hydrogen supply, feed pumps, and feed furnace as the fixed-bed RDS reactor.

Catalyst

CLG's RDS and VRDS catalysts are developed by Advanced Refining Technology (ART), a joint venture of ChevronTexaco and Grace Davison. A special spherical catalyst developed by CLG and ART was designed to fit the requirements of the OCR process:

- High hydrodemetallization activity and metals capacity to minimize downstream reactor volume and catalyst usage
- Moderate hydrodesulfurization (HDS) and Conradson carbon removal (HDCCR) activity to reduce coking

Downloaded from Digital Engineering Library @ McGraw-Hill (www.digitalengineeringlibrary.com)
Copyright © 2004 The McGraw-Hill Companies. All rights reserved.
Any use is subject to the Terms of Use as given at the website.

CHEVRON LUMMUS GLOBAL ON-STREAM CATALYST REPLACEMENT
TECHNOLOGY FOR PROCESSING HIGH-METAL FEEDS

- Strength and hardness to minimize breakage in handling
- Consistent shape and size to facilitate catalyst transfer and stable bed operation

Since its introduction in 1992, the OCR catalyst has exhibited low attrition, high crush strength, and exceptional selectivity for residue demetallization. The Ni + V conversion typically exceeds 60 percent for the first 60 days of operation and then gradually trends toward the expected equilibrium conversion level, 50 to 70 percent (see Fig. 10.1.3). In commercial operation catalyst is withdrawn and routinely analyzed for nickel and vanadium content. This analysis confirms that only the most spent OCR catalyst is being withdrawn—a critical factor in minimizing catalyst consumption and cost.

While the main objective of the OCR reactor is to extend catalyst life in downstream fixed-bed reactors by maintaining high HDM performance, the OCR catalyst also achieves high HDS/HDM and HDCCR/HDM activity ratios. As shown in Fig. 10.1.4, the OCR reactors' sulfur and CCR conversion has been excellent. Typically, the HDS conversion stabilizes at the HDS equilibrium objective target of 50 percent while the HDCCR conversion stabilizes at the equilibrium objective target of 30 percent. The level of HDS and HDCCR activity in the OCR reactors greatly improves the overall performance of the OCR/RDS units and significantly extends the run life of the fixed-bed catalyst.

COMMERCIAL OPERATION

CLG's OCR process has been in commercial operation since 1992. The first unit was installed as a retrofit to a CLG-licensed RDS unit at the Indemitsu Kosan Company, Ltd. (IKC) Aichi refinery (see Fig. 10.1.5). Chiyoda Corporation provided the detailed engineering for the project. The RDS unit at the Aichi refinery consists of two parallel reactor trains which process a total of 50,000 barrels per stream-day (BPSD) of atmospheric residuum (AR) that is fed to a residual fluid catalytic cracking (RFCC) unit. Prior to adding OCR, atmospheric residuum from Arabian Light was the required feed. Upgrading the RDS unit with an OCR reactor enabled IKC to switch feeds from 100 percent Arabian Light to a less expensive blend of 50 percent Arabian Light and 50 percent Arabian Heavy

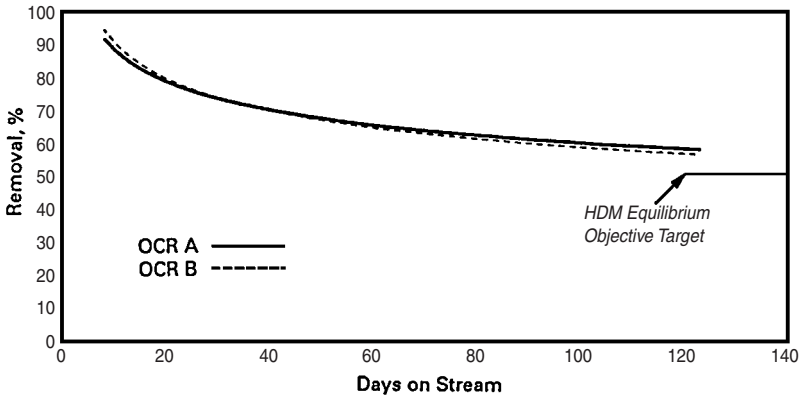

FIGURE 10.1.3 OCR hydrodemetallization performance. By maintaining consistently high HDM performance throughout the run, OCR reactors minimize catalyst consumption and optimize catalytic performance.

Downloaded from Digital Engineering Library @ McGraw-Hill (www.digitalengineeringlibrary.com)
Copyright © 2004 The McGraw-Hill Companies. All rights reserved.
Any use is subject to the Terms of Use as given at the website.

CHEVRON LUMMUS GLOBAL ON-STREAM CATALYST REPLACEMENT
TECHNOLOGY FOR PROCESSING HIGH-METAL FEEDS

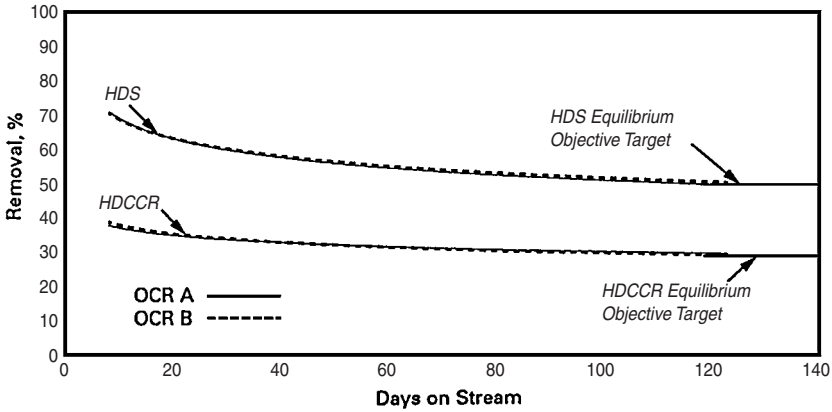

FIGURE 10.1.4 OCR hydrodesulfurization and Conradson carbon removal. The OCR reactors' excellent sulfur and Conradson carbon residue conversion enables downstream RDS units to optimize catalyst usage.

without sacrificing RFCC feed quality and fixed-bed catalyst life. Table 10.1.1 shows how the feed rate was increased, yields of naphtha and gas oil increased, and RFCC feedstock properties improved with the addition of the OCR reactors. The OCR unit also improved the activity and fouling rate of the RDS catalyst (see Fig. 10.1.6).

OCR APPLICATIONS

The driving force behind the decision to add OCR technology to an RDS processing scheme is the desire to run heavier, higher-metal feeds, because of crude oil changes or the need to cut deeper into the barrel. As the metal content of the feed rises above 100 to 150 ppm, the catalyst life cycle decreases to the point of being uneconomical. Figure 10.1.7 shows how much the relative catalyst life for a fixed-bed unit decreases as the total feed metals in the residuum increase.

When OCR is added to the processing scheme, total catalyst consumption is less than that for processing with a fixed-bed unit alone. Figure 10.1.8 shows the catalyst consumption required for a fixed-bed RDS unit operating alone versus a combined OCR/RDS processing scheme. The economy of the OCR reactor is especially apparent as the feed metals approach 200 ppm. Total catalyst consumption is lower because only the most heavily loaded catalysts are removed from an OCR. In a fixed-bed reactor, catalyst with low metal loading must be discarded with the spent catalyst at the end of the run. Since only spent catalysts are removed from an OCR reactor, the catalyst is fully utilized, thus reducing the total catalyst cost per barrel of feed processed. Coincidentally, this also minimizes the amount of spent catalyst generated per pound of metals removed. The higher metals on the spent catalyst allow for more economic reclamation of the metals from the spent OCR catalysts.

Adding an OCR in front of an RDS is also cost-effective when the goal is to maximize production of lighter, cleaner-burning transportation fuels. The OCR allows less demetallization catalyst to be used in the fixed beds, thus providing greater reactor volume for high-activity desulfurization catalyst. Achieving deeper desulfurization in the RDS unit enables refiners to produce ultralow-sulfur fuel oil as well as exceptionally clean feed for an RFCC unit.

Downloaded from Digital Engineering Library @ McGraw-Hill (www.digitalengineeringlibrary.com)
Copyright © 2004 The McGraw-Hill Companies. All rights reserved.
Any use is subject to the Terms of Use as given at the website.

CHEVRON LUMMUS GLOBAL ON-STREAM CATALYST REPLACEMENT
TECHNOLOGY FOR PROCESSING HIGH-METAL FEEDS

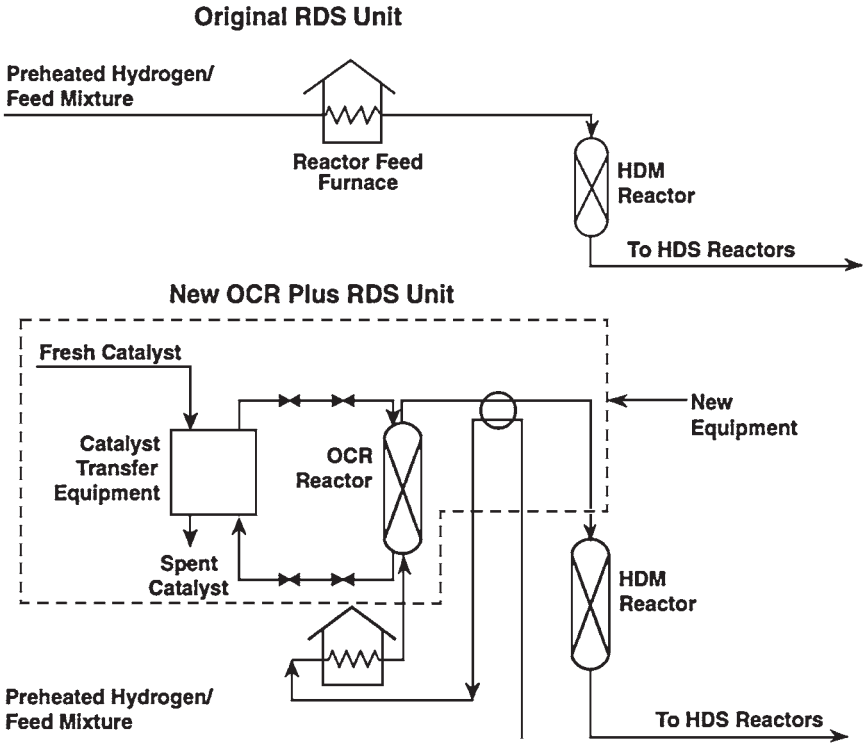

FIGURE 10.1.5 OCR retrofit of Aichi RDS hydrotreating unit. The Aichi retrofit was completed in less than a month of downtime, and consisted of adding a new OCR reactor and an OCR reactor feed/effluent exchanger to each of the two reactor trains, as well as common catalyst transfer equipment.

Using an RDS unit to prepare feed for an RFCC reactor has gained wide acceptance because high-quality mogas and middle distillates can be produced with little or no low-value by-products. To maximize operating profitability, RFCCs require feeds that are very low in contaminant metals, carbon residue, and sulfur concentration, in addition to having feed volatility sufficiently high to fully vaporize at the feed nozzle. Metals reduce catalyst selectivity and activity, resulting in increased RFCC catalyst consumption. Carbon residue contributes to high coke yields and heat balance problems. Sulfur forces refiners to invest in expensive flue gas desulfurization equipment. Additionally, sulfur in the feed appears in the finished products.

In summary, the yield, product quality, and operating efficiency produced from an RFCC unit are directly related to the quality of the feed. The OCR/RDS technology has been used to process feed for RFCC units from a variety of heavy AR feeds, including Arabian Heavy and Ratawi. Pretreating the residuum in an OCR unit enables the refiner to use less expensive feeds, achieve higher product yields, and produce better product quality while experiencing fewer feed-related operating problems. OCR can also be combined with CLG's vacuum residuum desulfurization (VRDS) technology to upgrade vacuum residuum from heavy crudes into a synthetic AR with superior RFCC feed qualities. (For a more complete discussion, see Chap. 8.1.)

Downloaded from Digital Engineering Library @ McGraw-Hill (www.digitalengineeringlibrary.com)
Copyright © 2004 The McGraw-Hill Companies. All rights reserved.
Any use is subject to the Terms of Use as given at the website.

CHEVRON LUMMUS GLOBAL ON-STREAM CATALYST REPLACEMENT
TECHNOLOGY FOR PROCESSING HIGH-METAL FEEDS

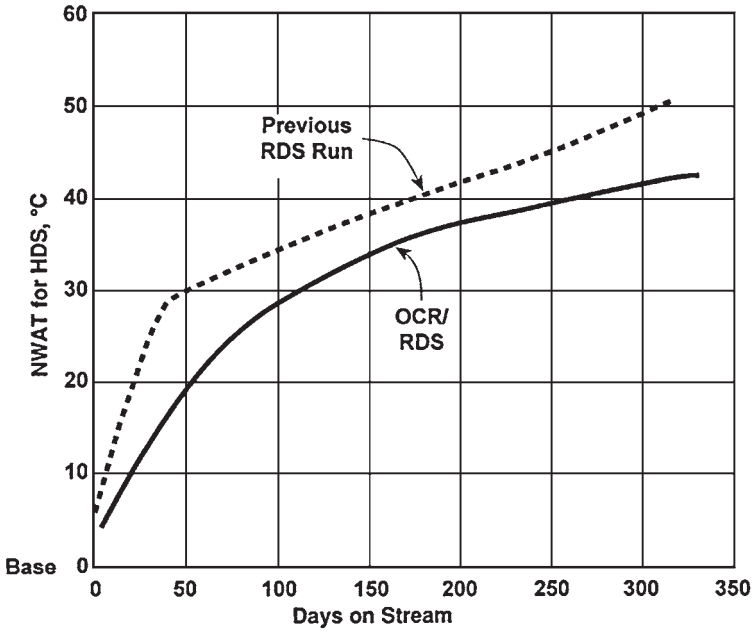

FIGURE 10.1.6 RDS catalyst performance improved with addition of OCR unit. Adding an OCR unit enabled Aichi to switch to a less expensive heavy feed, besides improving the activity of the RDS catalyst.

TABLE 10.1.1 OCR Improves RDS Operation at the Aichi Refinery

	OCR/RDS, typical RDS run after OCR	RDS, typical RDS run before OCR
Atmospheric residuum feed rate, BPSD	50,000	45,000
Properties	OCR feed	RDS feed
Gravity, °API	13.6*	15.1
Sulfur, wt %	3.5	3.1
Conradson carbon residue, wt %	11	10
Ni + V, wt ppm	75	52
RFCC feed properties		
Sulfur, wt %	0.29	0.34
Conradson carbon residue, wt %	4.6	4.7
Ni + V, wt ppm	10	10
Cracking to naphtha and gas oil, LV %	20	15.5
Conradson carbon residue removal, wt %	67	61
Run cycle	1 year	1 year

*Crude oil was 2° API lower with OCR for a substantial savings in crude oil costs; °API = degrees on American Petroleum Institute scale; LV % = liquid volume percent.

Downloaded from Digital Engineering Library @ McGraw-Hill (www.digitalengineeringlibrary.com)
Copyright © 2004 The McGraw-Hill Companies. All rights reserved.
Any use is subject to the Terms of Use as given at the website.

CHEVRON LUMMUS GLOBAL ON-STREAM CATALYST REPLACEMENT
TECHNOLOGY FOR PROCESSING HIGH-METAL FEEDS

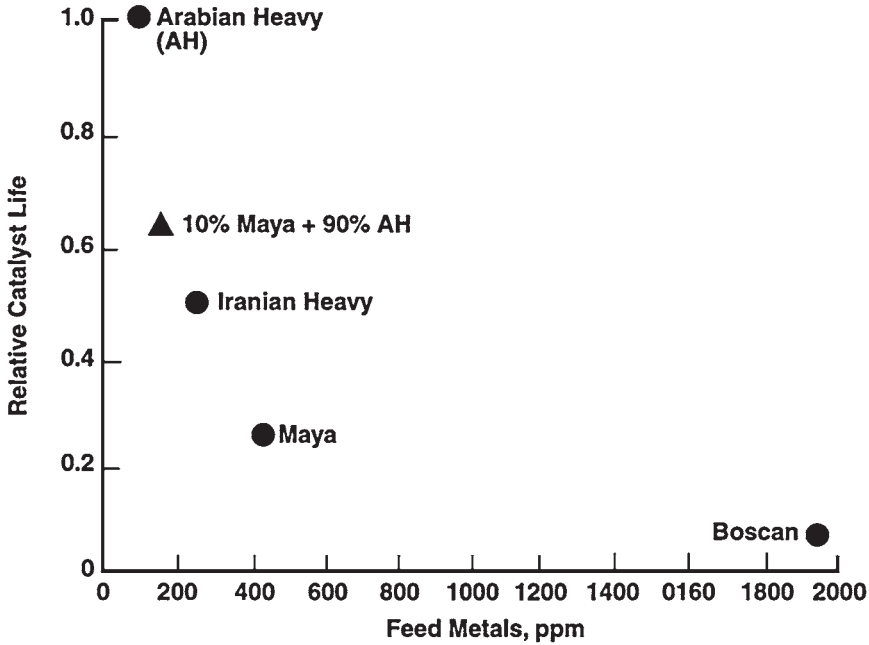

FIGURE 10.1.7 Relative RDS/VRDS catalyst life versus feed metal concentration. (VRDS is vacuum residuum desulfurization.) Conventional fixed-bed hydrotreating cannot economically process high-metal feeds.

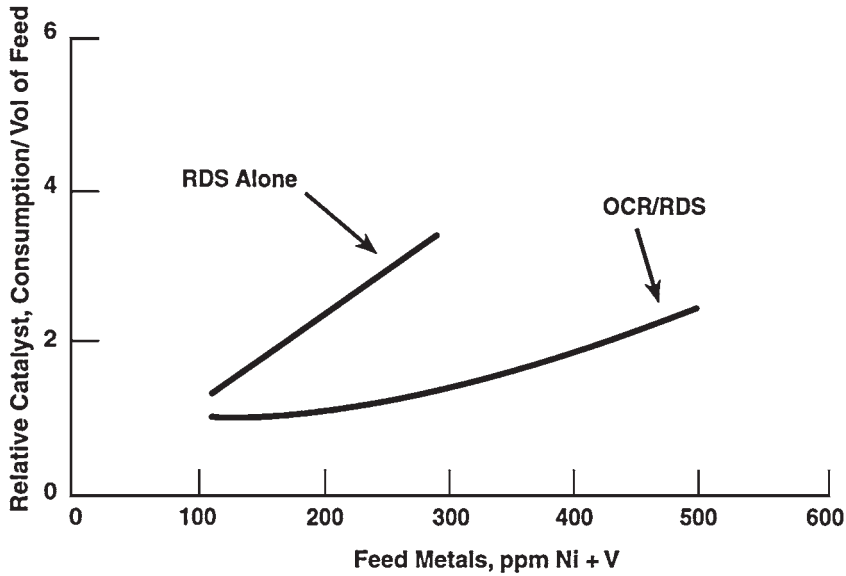

FIGURE 10.1.8 Comparison of catalyst consumption. Total catalyst cost is reduced when OCR technology is added to processing schemes designed to treat heavy, high-metal feeds. (*Note:* Based on the same reactor volume in both systems.)

Downloaded from Digital Engineering Library @ McGraw-Hill (www.digitalengineeringlibrary.com)
Copyright © 2004 The McGraw-Hill Companies. All rights reserved.
Any use is subject to the Terms of Use as given at the website.

CHEVRON LUMMUS GLOBAL ON-STREAM CATALYST REPLACEMENT
TECHNOLOGY FOR PROCESSING HIGH-METAL FEEDS

ECONOMIC BENEFITS OF OCR

The most apparent economic benefit of adding OCR to the processing scheme is the ability to run heavier, high-metal, less expensive crudes. Figure 10.1.9 shows how gains in gross margin can be made by improving unit capacity while maintaining the same fixed-bed investment. Similarly, when retrofitting an existing RDS unit with OCR technology, savings are achieved by extending catalyst life and run lengths. Each catalyst change-out in a fixed-bed unit takes approximately 4 weeks. The shorter run-length means a costly reduction in the on-stream factor. Thus, the penalties for processing a high-metal feed in a fixed-bed unit are twofold—higher catalyst cost and reduced on-stream factor. OCR eliminates these limitations by providing maximum catalyst utilization and increasing the on-stream operating factor to approximately 0.96.

The economics of the OCR process are greatly dependent on the difference in price between light and heavy crudes, and each refiner's operating constraints. At a differential of U.S. $1.80/bbl between Arab Light and Arab Heavy crude, switching from 100 percent Arabian Light to a 50/50 blend of Arabian Light and Arabian Heavy will pay back the OCR investment in less than 2 years. Alternatively, the unit throughput can be increased. In this scenario, with a product upgrade from heavy feed to low-sulfur fuel oil and to middle distillate, an increase in feed rate of 10,000 BPD will pay out in less than 2 years.

More recently, CLG has also commercialized its UpFlow Reactor (UFR) technology in China. The UFR is essentially the OCR reactor without the catalyst handling equipment. As with the OCR, the UFR's low pressure drop and the reduction in pressure drop buildup during the run are particularly well suited for revamping existing units. Installing a UFR allows for the refiner to make a cheaper initial capital investment, while designing in the flexibility to invest in an OCR with the catalyst handling equipment in the future. The OCR allows for processing more difficult, higher-metals feeds with the ability to replace catalyst on-line.

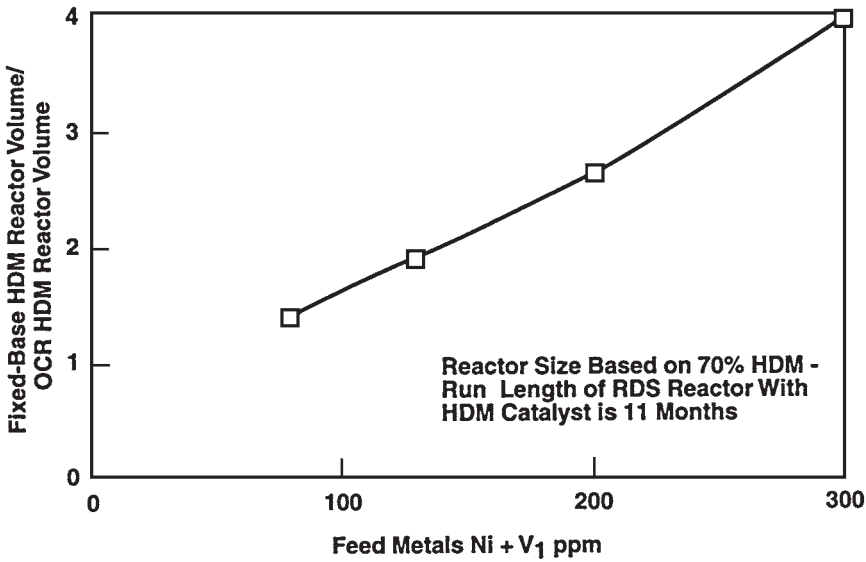

FIGURE 10.1.9 Savings in HDM reactor size with OCR. Throughput capacity of RDS units increases significantly when they are operated in conjunction with an OCR unit.

Downloaded from Digital Engineering Library @ McGraw-Hill (www.digitalengineeringlibrary.com)
Copyright © 2004 The McGraw-Hill Companies. All rights reserved.
Any use is subject to the Terms of Use as given at the website.

CHEVRON LUMMUS GLOBAL ON-STREAM CATALYST REPLACEMENT
TECHNOLOGY FOR PROCESSING HIGH-METAL FEEDS

OCR is a valuable technology for refiners trying to meet tough environmental guidelines within tight budgetary constraints. The benefits of the OCR process are summarized below:

- Ability to process less expensive, heavy, high-metal feedstocks
- No interruption in operations to remove spent catalyst or add fresh catalyst to the OCR reactor
- Prevention of guard-bed plugging problems
- Longer life for downstream residuum-hydrotreating fixed-bed catalysts
- Reduced downtime for fixed-bed catalyst change-outs
- Savings in HDM reactor size
- Additional throughput capacity with no increase in furnace capacity or NO_x emissions
- Lower overall catalyst costs
- Minimized waste from spent catalyst
- Economical recovery of metals from spent catalyst

Downloaded from Digital Engineering Library @ McGraw-Hill (www.digitalengineeringlibrary.com)
Copyright © 2004 The McGraw-Hill Companies. All rights reserved.
Any use is subject to the Terms of Use as given at the website.

Downloaded from Digital Engineering Library @ McGraw-Hill (www.digitalengineeringlibrary.com)
Copyright © 2004 The McGraw-Hill Companies. All rights reserved.
Any use is subject to the Terms of Use as given at the website.

Source: HANDBOOK OF PETROLEUM REFINING PROCESSES

CHAPTER 10.2
THE ROSE PROCESS

Tayseer Abdel-Halim and Raymond Floyd
Kellogg Brown & Root, Inc. Resid Upgrading Technology
Houston, Texas

BACKGROUND

The Residuum Oil Supercritical Extraction (ROSE™) process is the premier deasphalting technology available in industry today. This state-of-the-art process extracts high-quality deasphalted oil (DAO) from atmospheric or vacuum residues and other feedstocks. Depending on solvent selection, the DAO can be an excellent feedstock for catalytic cracking, hydrocracking, or lube oil blending. The asphaltene product from the ROSE process is often blended to fuel oil, but can also be used in the production of asphalt blending components, solid fuels, or fuel emulsions. Other possible options for the asphaltenes include use as feedstock to conversion processes such as partial oxidation, coking, or visbreaking.

The ROSE process was originally developed and commercialized by Kerr-McGee Corporation and first licensed by the company in 1979. In 1995, KBR (Kellogg Brown & Root, Inc.) acquired the ROSE process from Kerr-McGee. To date, 33 ROSE units with a total capacity of over 600,000 BPSD have been licensed and/or designed. All these units utilize supercritical fluid technology. KBR is responsible for the design or revamp of more than 400,000 BPSD of this total capacity, including the conversion of the world's largest solvent deasphalting facility for Chevron in Richmond, California, to a 50,000 BPSD ROSE unit.

ADVANTAGES

Processing residues in a ROSE unit merits serious consideration for today's refiner. A processing scheme utilizing a ROSE unit offers several operational and economic advantages over competing schemes. These advantages include

- Increased yield and improved quality of valuable DAO product compared to other deasphalting processes
- Significantly reduced fuel oil production for refineries blending vacuum residue to fuel
- Flexibility to process atmospheric/vacuum residues from varying crude sources with little difficulty

Downloaded from Digital Engineering Library @ McGraw-Hill (www.digitalengineeringlibrary.com)
Copyright © 2004 The McGraw-Hill Companies. All rights reserved.
Any use is subject to the Terms of Use as given at the website.

- State-of-the-art supercritical solvent recovery that significantly reduces operating costs compared to other solvent deasphalting processes
- Significantly lower capital and operating costs compared to other upgrading processes

ROSE DAO YIELD AND QUALITY ADVANTAGE

ROSE technology offers significant DAO yield and quality advantages compared to other technologies. Superior process performance is ensured by utilizing state-of-the-art asphaltene and DAO separator internals (ROSEMAX).

Achieving the maximum yield and quality benefits from countercurrent extraction requires that limits to mass transfer be minimized. The capacity of the separator vessels must be maximized for a given size for economical design. These issues are addressed by the new generation of ROSE separator internals. A brief discussion of the ROSEMAX internals is provided in the next few paragraphs.

A commitment to enhance performance of the asphaltene and DAO separators for two ROSE licensees prompted KBR to consider significant design improvements to the previous Kerr-McGee internals design. KBR and Koch Engineering formed a team to identify design improvements and to quantify potential benefits. A significant amount of engineering analysis, pilot-plant testing, and computer flow modeling was done to support design changes that would significantly improve performance. A major advance resulting from these efforts was the development of our new proprietary ROSEMAX separator internals that are now available to all ROSE licensees.

New packing capacity correlations were developed based on laboratory and pilot-plant test work done by Koch and KBR for both liquid-liquid and supercritical service. These correlations can be used for both structured and random dumped packing. The correlations were verified for the conditions found in the ROSE separators, i.e., very high phase rates, low interfacial tension, and near-critical and supercritical conditions. These correlations provide improved understanding of how the packing crimp size, crimp angle, and surface treatment affect extraction capacity and efficiency and coalescing capacity and efficiency. A complete understanding of how to vary packing parameters to achieve desired performance is required for proper selection of packing size and arrangement.

The use of ROSEMAX internals allows the ROSE separators to operate at about twice the phase rates of conventional separators and provides about twice the mass-transfer efficiency of conventional extraction contacting devices.

ROSE OPERATING COST SAVINGS

ROSE utility costs (steam, power, fuel, and cooling water) are typically 40 to 70 percent of the costs associated with a conventional solvent deasphalting process. These savings are primarily a result of recovering over 90 percent of the extraction solvent as a supercritical fluid. Other processes remove the solvent from the DAO by flashing at low pressure. The solvent is then compressed and condensed before being reused in the process.

These utility savings can play a significant role in minimizing total project costs associated with conversion of an existing solvent deasphalting unit to ROSE technology or for a grassroots installation.

Conventional versus Supercritical Solvent Recovery

Figure 10.2.1 illustrates the energy requirements to recover the solvent in the DAO for conventional solvent recovery processes. All the solvent exits the extractor as a solution of

Downloaded from Digital Engineering Library @ McGraw-Hill (www.digitalengineeringlibrary.com)
Copyright © 2004 The McGraw-Hill Companies. All rights reserved.
Any use is subject to the Terms of Use as given at the website.

THE ROSE PROCESS

DAO and solvent at a relatively low-temperature and high pressure (point A). The stream is heated and flashed at some higher temperature and reduced pressure (point E). At this condition the majority of the solvent flashes from the solution and is condensed. The DAO and the remaining solvent are further heated and enter the product stripper (point F) at a greatly reduced pressure, where the remaining solvent is recovered. In this scheme, all the solvent is vaporized and condensed prior to being recycled to the extraction conditions. The energy requirements for this path are proportional to the quantity of solvent that follows each course.

Figure 10.2.2 illustrates the energy requirements to recover the solvent in the DAO for a supercritical solvent recovery processes. All the solvent exits the extractor as a solution of DAO and solvent at approximately the same relatively low temperature and high-pressure conditions as the conventional scheme (point A). The DAO solvent solution flows through the ROSE exchanger, gaining heat from the recycled supercritical solvent (point B). The solution is further heated by gaining heat from the stripped DAO product and

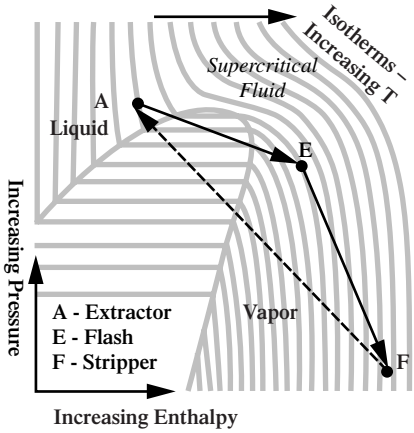

FIGURE 10.2.1 Conventional solvent recovery.

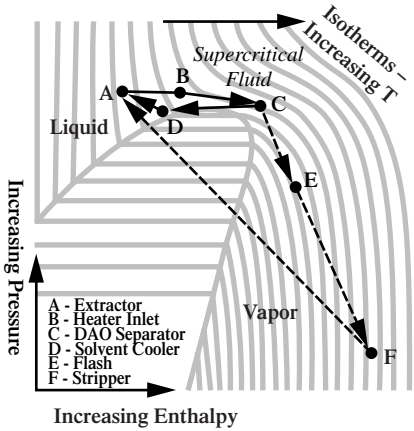

FIGURE 10.2.2 Supercritical solvent recovery.

Downloaded from Digital Engineering Library @ McGraw-Hill (www.digitalengineeringlibrary.com)
Copyright © 2004 The McGraw-Hill Companies. All rights reserved.
Any use is subject to the Terms of Use as given at the website.

steam or hot oil in the DAO separator preheater (point C). At point C, 85 to 93 percent of the solvent is recovered as a supercritical solvent. The supercritical solvent provides the majority of the heat for the DAO solvent solution (point A to point B) as it is cooled from point C to point D. The solvent is cooled to the temperature required for the extraction (point A) in a solvent cooler.

The residual solvent in the DAO product exiting from the DAO separator is recovered by flashing and stripping. In the supercritical solvent recovery scheme, only 7 to 15 percent of the extraction solvent is heated to points E and F, compared to 100 percent of the solvent in the conventional scheme.

Since the horizontal distances in Figs. 10.2.1 and 10.2.2 are proportional to the change in the solvent's enthalpy and in both schemes the same amount (about 0.5 percent) must be stripped from the DAO product (point F), the energy requirement for the supercritical solvent recovery scheme is only 34 percent of the heat energy requirement for single-effect evaporative solvent recovery.

PROCESS DESCRIPTION

Summary

In the ROSE process, DAO product is extracted from the vacuum residue (feed) with a light solvent such as *n*-butane or *n*-pentane. Asphaltene is produced as a by-product. The asphaltene product can be used as a blend component in the production of some grades of asphalt cement or in fuel oil. The asphaltenes can also be further processed by visbreaking, coking, or partial oxidation to recover additional products.

Figures 10.2.3 through 10.2.6 and the process description that follows detail a two-stage ROSE unit producing DAO and asphaltene products only. The process flows for two-stage and three-stage ROSE units are very similar. The three-stage unit contains an additional train of resin product recovery equipment similar to the product recovery equipment for the DAO and asphaltene products. Detailed process design is normally performed to identify opportunities for heat integration within the resin product recovery system.

Feed System

Vacuum residue is pumped to the feed surge drum. Feed from the drum is charged to the unit by the feed pump. The feed pump boosts the vacuum residue to a sufficiently high pressure to feed the asphaltene separator. The incoming feed is mixed with a portion of the solvent and is cooled against asphaltene solvent from the bottom of the asphaltene separator in the asphaltene/feed exchanger. The cooled feed is mixed with a second portion of the solvent prior to entering the top distributor of the asphaltene separator.

Asphaltene Separator

The feed/solvent mixture feeds the top distributor of the asphaltene separator. Additional solvent required for the extraction enters the bottom distributor of the asphaltene separator, providing countercurrent flow.

Asphaltenes are insoluble in the extraction solvent at the extraction conditions and therefore drop out of solution and exit through the bottom of the asphaltene separator. Slightly less than one volume of dissolved solvent per volume of asphaltenes exits as an

Downloaded from Digital Engineering Library @ McGraw-Hill (www.digitalengineeringlibrary.com)
Copyright © 2004 The McGraw-Hill Companies. All rights reserved.
Any use is subject to the Terms of Use as given at the website.

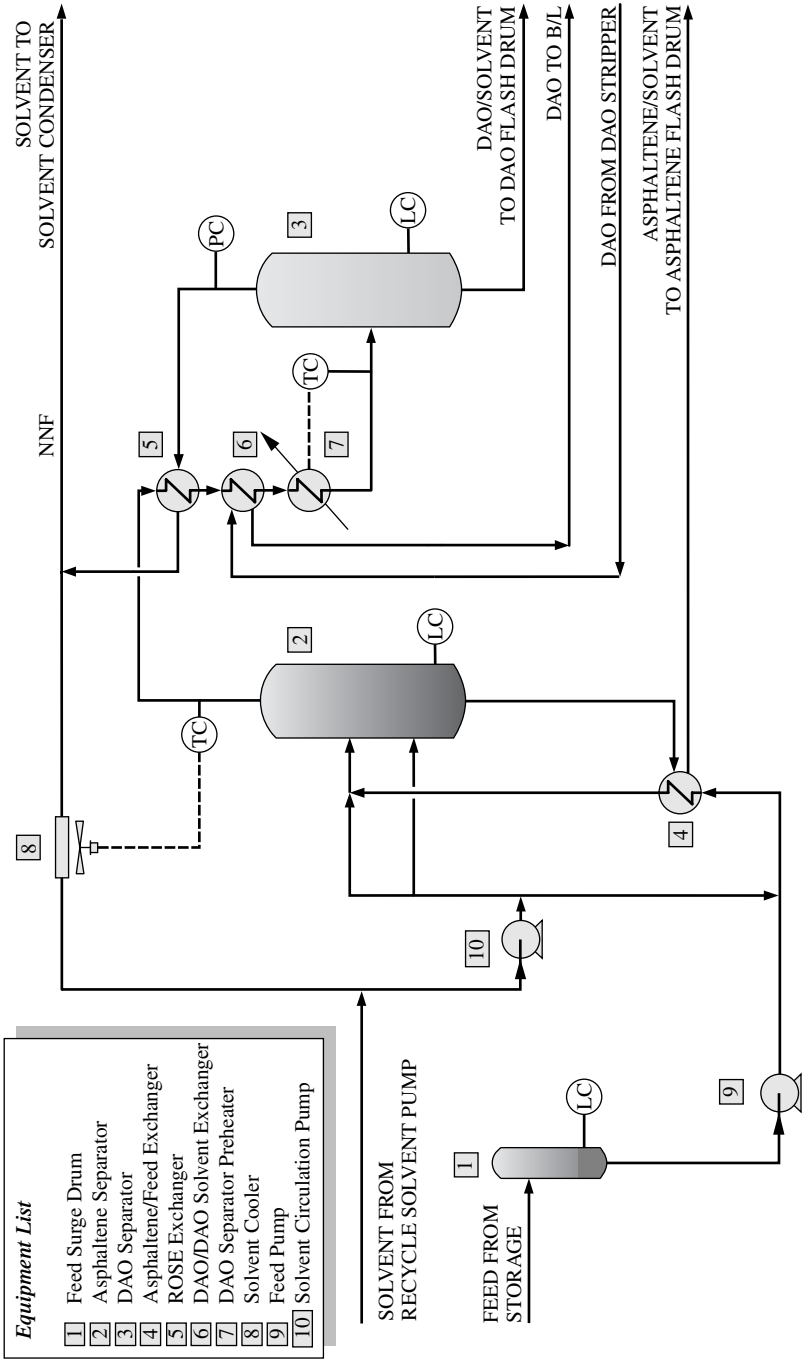

FIGURE 10.2.3 ROSE unit separator section.

Downloaded from Digital Engineering Library @ McGraw-Hill (www.digitalengineeringlibrary.com)
Copyright © 2004 The McGraw-Hill Companies. All rights reserved.
Any use is subject to the Terms of Use as given at the website.

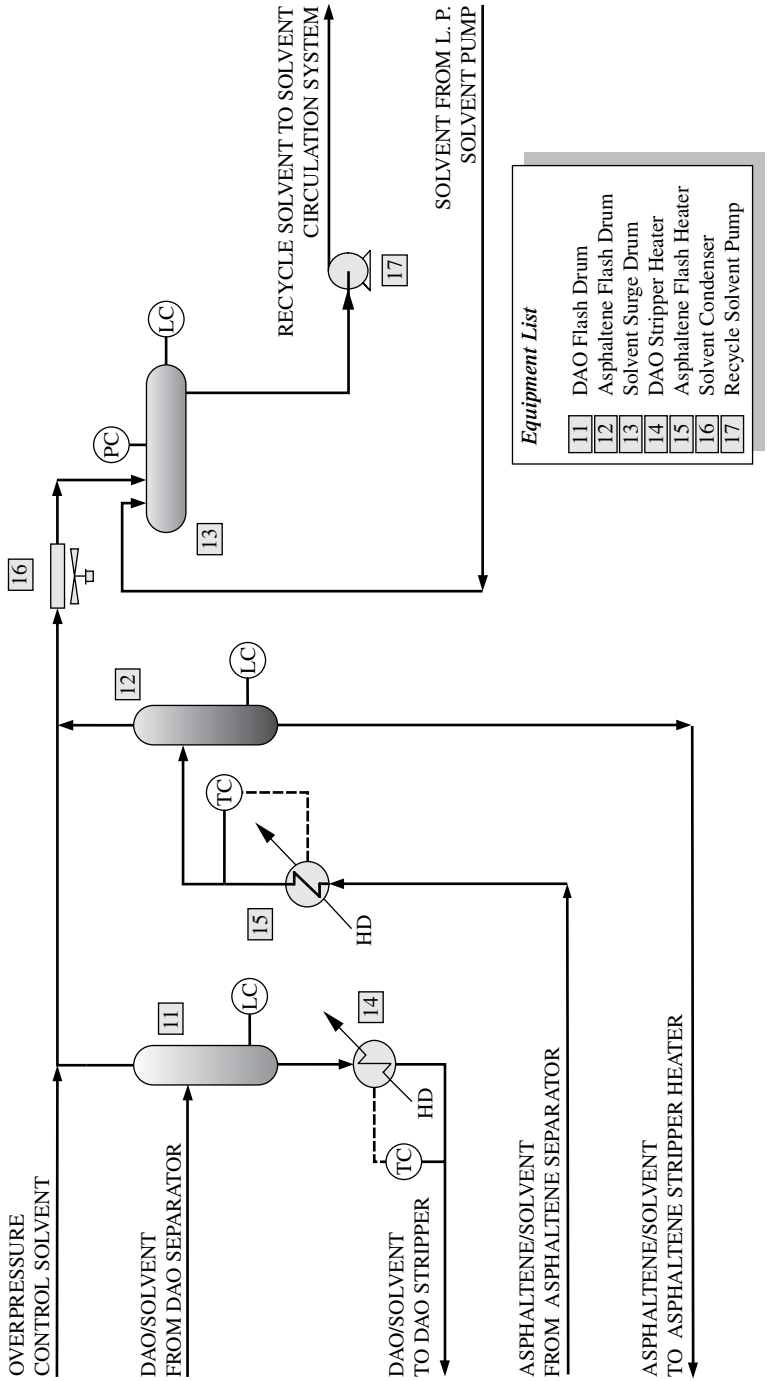

FIGURE 10.2.4 ROSE unit preflash section.

Downloaded from Digital Engineering Library @ McGraw-Hill (www.digitalengineeringlibrary.com)
Copyright © 2004 The McGraw-Hill Companies. All rights reserved.
Any use is subject to the Terms of Use as given at the website.

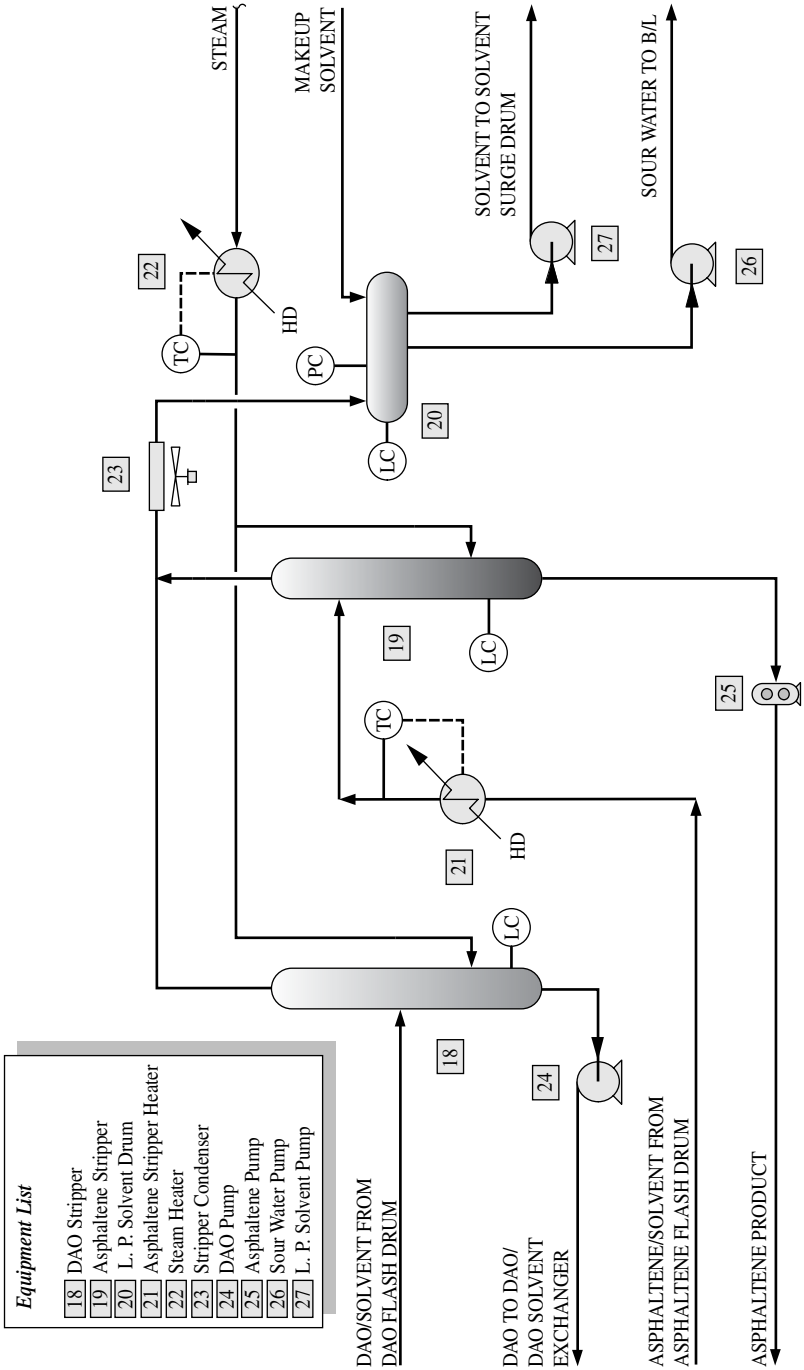

FIGURE 10.2.5 ROSE unit stripper section.

Downloaded from Digital Engineering Library @ McGraw-Hill (www.digitalengineeringlibrary.com)
Copyright © 2004 The McGraw-Hill Companies. All rights reserved.
Any use is subject to the Terms of Use as given at the website.

THE ROSE PROCESS

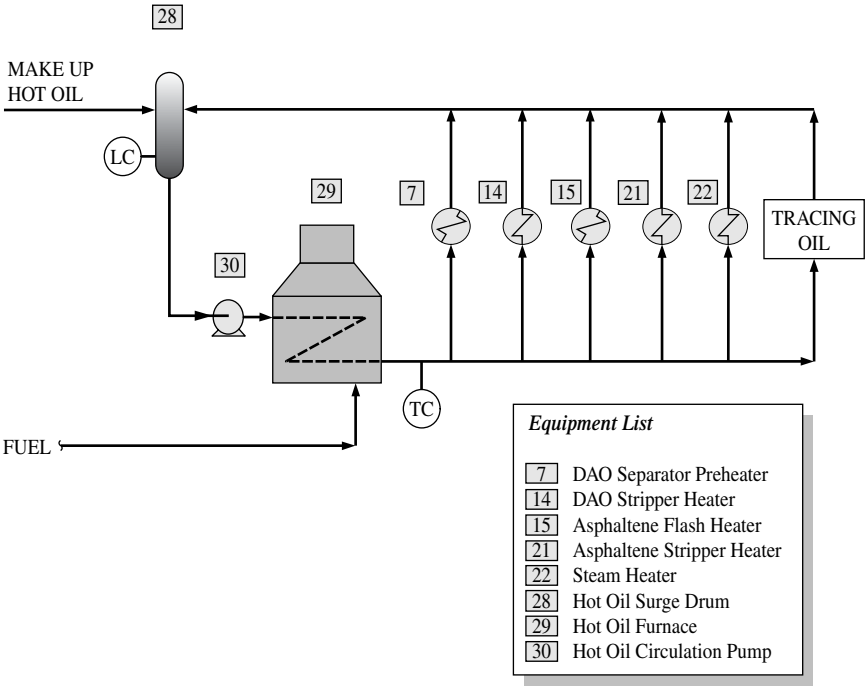

FIGURE 10.2.6 ROSE unit hot oil system.

asphaltene/solvent solution. This asphaltene/solvent solution flows to the asphaltene stripping section where the dissolved solvent is stripped from the asphaltene product.

The lighter DAO is soluble in the solvent at the extraction condition. This DAO/solvent solution, containing the majority of the solvent, exits the top of the asphaltene separator as rich solvent.

Operating temperature, solvent composition, solvent/oil ratio, and, to a lesser extent, pressure in the asphaltene separator affect product yield and quality. Since certain primary process parameters (i.e., solvent/oil ratio, solvent composition, and operating pressure) are fixed or set at relatively constant values, the asphaltene separator operating temperature is used as the primary performance control variable.

The DAO yield is effectively controlled by the asphaltene separator operating temperature. Higher operating temperatures result in less DAO product extracted overhead. Lower operating temperatures produce more DAO, but of a poorer quality. The solvent cooler controls the asphaltene separator overhead temperature, thereby controlling the DAO yield.

ROSE Exchanger and DAO Separator

The asphaltene separator overhead DAO/solvent solution (i.e., rich solvent) is heated above the critical temperature of the pure solvent by exchanging heat with recovered lean solvent in the ROSE exchanger, with DAO product in the DAO/DAO solvent exchanger,

Downloaded from Digital Engineering Library @ McGraw-Hill (www.digitalengineeringlibrary.com)
Copyright © 2004 The McGraw-Hill Companies. All rights reserved.
Any use is subject to the Terms of Use as given at the website.

THE ROSE PROCESS

and with hot oil in the DAO separator preheater. The rich solvent then enters the DAO separator.

Increasing the temperature of the solvent above its critical temperature takes advantage of the solvent's low-density properties in this region. As the temperature increases above the critical point, the density of the solvent significantly decreases to values approaching those of dense gases. At this increased temperature, the DAO is virtually insoluble in the solvent, and a phase separation occurs. Approximately 90 percent of the solvent from the rich solvent stream is recovered by this supercritical phase separation.

Supercritical phase separation in the DAO separator and subsequent heat recovery in the ROSE exchanger provide significant energy savings over conventional deasphalting processes. The conventional processes have substantial energy requirements to vaporize and condense subcritical solvent in the solvent recovery system.

The DAO phase, containing slightly less than one volume of dissolved solvent per volume of DAO product, is withdrawn from the bottom of the DAO separator. This DAO/solvent solution flows to the DAO stripping section where the remaining solvent is stripped from the DAO product.

The DAO separator operating conditions are set to achieve the density difference needed for good separation. Pressure is controlled by adjusting recycle solvent flow to the high-pressure system from the recycle solvent pump. Temperature is controlled by adjusting the hot oil flow to the DAO separator preheater.

Solvent Cooler and Solvent Circulation Pump

The recovered solvent leaves the DAO separator as lean solvent, also known as circulating solvent. Heat is recovered from the lean solvent in the ROSE exchanger. The solvent is then circulated back through the solvent cooler for temperature control of the asphaltene separator overhead. Sufficient excess duty is available to provide cooling for swings in feed temperature.

The recycle solvent from the recycle solvent pump combines with the large volume of circulating solvent from the solvent cooler. The combined flow enters the solvent circulation pump, which boosts the pressure back to the asphaltene separator operating pressure, thus making up for the pressure drop in the circulating solvent loop. Flow valves downstream of the pump provide adequate control for splitting solvent between the top and bottom distributors of the asphaltene separator.

DAO Stripping Section

The DAO/solvent solution is fed to the DAO flash drum on interface-level control from the DAO separator. At the flash drum, the pressure is reduced so that much of the solvent flashes overhead. A temperature decrease is expected from the flash. The DAO is then fed to the DAO stripper on liquid-level control from the DAO flash drum. Before entering the DAO stripper, the DAO solution is heated in the DAO stripper heater. The heater provides sufficient heat to the system to maintain the recommended operating temperature in the DAO stripper. Heat is provided by either steam or a closed-loop hot oil system.

The DAO is contacted with superheated steam in the stripper to strip any remaining solvent to low levels in the product stream. Steam reduces the partial pressure of the solvent in the stripper, thus allowing more solvent to vaporize from the DAO liquid. For good stripping and to meet flash point specifications, stripping steam rates are on flow control and are usually set at 0.5 lb/h of steam per BPD of DAO product. The steam temperature should be at or above the recommended operating temperature of the stripper. Colder

Downloaded from Digital Engineering Library @ McGraw-Hill (www.digitalengineeringlibrary.com)
Copyright © 2004 The McGraw-Hill Companies. All rights reserved.
Any use is subject to the Terms of Use as given at the website.

THE ROSE PROCESS

steam can cool the DAO and impair stripping performance. Wet steam can cause foaming and operational problems.

The DAO flash drum overhead solvent vapor is condensed in the solvent condenser. The condensed solvent is stored in the solvent surge drum. The solvent is recycled to the process under pressure control.

The DAO stripper overhead solvent vapor and steam flow through the stripper condenser, where the solvent and steam are condensed. The condensed solvent and water are separated in the low-pressure (LP) solvent drum. The water is removed on level control from the LP solvent drum and sent to the sour water system. The condensed solvent is pumped by the LP solvent pump to the solvent surge drum before being recycled to the process.

The DAO product exits the stripper bottom and is pumped on level control with the DAO pump. Heat from the DAO is then recovered in the DAO/DAO solvent exchanger by preheating rich solvent upstream of the DAO separator preheater.

Asphaltene Stripping Section

The asphaltene/solvent solution from the asphaltene separator is heated by the feed in the asphaltene/feed exchanger and the asphaltene flash heater by either steam or a closed-loop hot oil system. This heat input is required to maintain a minimum inlet temperature for asphaltene handling in the downstream asphaltene flash drum.

The hot asphaltene/solvent solution is fed to the asphaltene flash drum on interface-level control from the asphaltene separator. At the flash drum, the pressure is reduced so that much of the solvent flashes overhead. A temperature decrease is expected from the flash.

The asphaltene is then fed to the asphaltene stripper on liquid-level control from the asphaltene flash drum. Before entering the asphaltene stripper, the asphaltenes flow through the asphaltene stripper heater. The heater provides sufficient heat to the system to maintain the recommended operating temperature in the asphaltene stripper. Heat is provided by either steam or a closed-loop hot oil system.

The asphaltene is contacted with superheated steam in the stripper to strip the remaining solvent to low levels in the product stream. Steam reduces the partial pressure of the solvent in the stripper, thus allowing more solvent to vaporize from the asphaltene liquid. Stripping steam rates are on flow control and are usually set at 0.5 lb/h of steam per BPD of asphaltene product for good stripping and to meet flash point specifications.

The steam temperature should be at or above the recommended operating temperature of the stripper. Colder steam can cool the asphaltene product and impair stripping performance. Wet steam can cause foaming and operability problems.

The asphaltene flash drum overhead solvent vapor flows through the solvent condenser and is condensed. The condensed solvent is stored in the solvent surge drum. The solvent is recycled to the process.

The asphaltene stripper overhead solvent vapor and steam flow through the stripper condenser, where the solvent and steam are condensed. The condensed solvent and water are separated in the LP solvent drum. The water is removed on level control and sent to the sour water system. The condensed solvent is pumped by the LP solvent pump to the solvent surge drum before being recycled to the process.

The asphaltene product exits the stripper bottom and is pumped on level control by the asphaltene pump. Positive displacement pumps are usually required to handle the highly viscous material. The operating temperature maintains the asphaltenes at a viscosity suitable for pumping. Colder temperatures may cause pumping and handling problems. The asphaltene product can be cooled against the asphaltene solvent before it is sent to downstream fuel oil blending facilities or to other potential processes or markets.

Downloaded from Digital Engineering Library @ McGraw-Hill (www.digitalengineeringlibrary.com)
Copyright © 2004 The McGraw-Hill Companies. All rights reserved.
Any use is subject to the Terms of Use as given at the website.

THE ROSE PROCESS

The solvent recovered from the strippers is recycled to the process from the LP solvent drum. Since hydrogen sulfide (H_2S) may be present in the drum vapor, noncondensable gases are purged from the drum vapor space and directed to sour fuel gas.

The solvent condenser is designed to accept additional intermittent loads from the high-pressure solvent system's overpressure control valve. This valve opens when the DAO separator pressure increases and excess solvent must be purged from the system to maintain the proper pressure. This situation occurs primarily during start-up when charge is admitted to the liquid-filled system and additional solvent must be released to the solvent condenser to compensate for the charge volume.

The 30,000 BPD ROSE unit shown in Figs. 10.2.7 and 10.2.8 was designed to use either a mixed butane or *n*-pentane solvent to take advantage of seasonal and market demands.

PRODUCT YIELD AND QUALITIES

Many operating factors affect the DAO quality, but the two major parameters are DAO yield and extraction solvent. The highest maximum DAO yield is obtained by using *n*-pentane, the heaviest solvent tested. As lighter solvents are used, solvency is reduced and the maximum DAO yield decreases. Typical maximum DAO yield for each solvent is shown in Table 10.2.1.

For any given solvent, the DAO yield has significant impact on the DAO quality, as illustrated in Fig. 10.2.9. If a plant operates at maximum extraction using *n*-pentane, the DAO will have certain qualities. The other parameter that has significant impact on the DAO quality is the extraction solvent. The lighter the solvent, the less DAO is extracted,

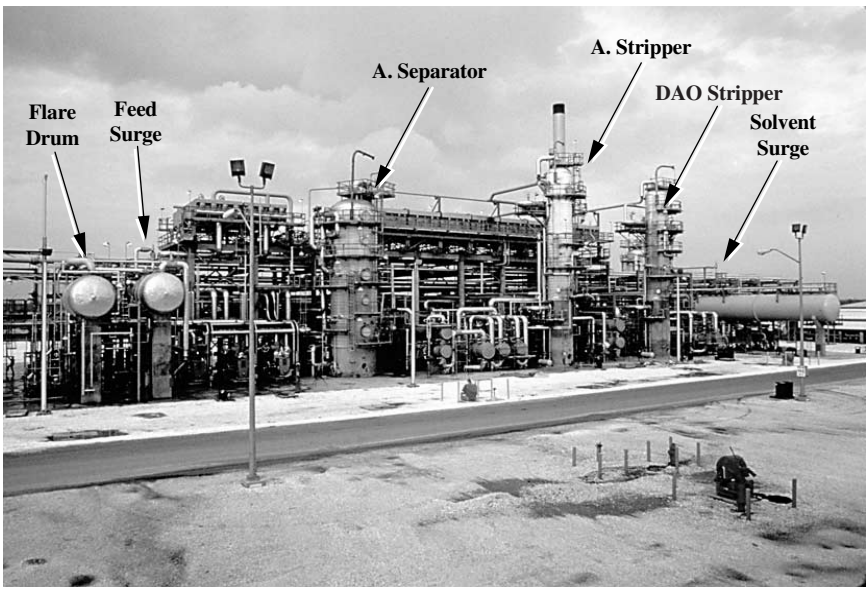

FIGURE 10.2.7 30,000 BPD ROSE unit, south side.

Downloaded from Digital Engineering Library @ McGraw-Hill (www.digitalengineeringlibrary.com)
Copyright © 2004 The McGraw-Hill Companies. All rights reserved.
Any use is subject to the Terms of Use as given at the website.

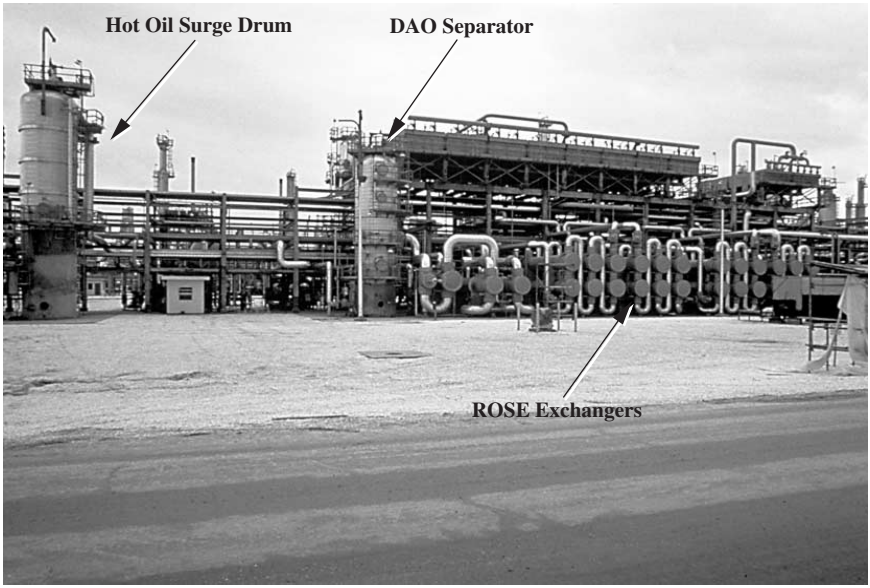

FIGURE 10.2.8 30,000 BPD ROSE unit, north side.

TABLE 10.2.1 Maximum DAO Yields

Solvent	Max. DAO yield, wt %
n-Pentane	84
n-Butane	74
i-Butane	66
Propane	50

but the DAO is always cleaner than when produced by heavier solvents. For example, DAO produced by *n*-butane will always have a higher viscosity, specific gravity, Conradson carbon, etc., than a DAO produced at the same yield by *i*-butane.

A common use of DAO is as additional fluid catalytic cracking unit (FCCU) feed. Several factors could limit FCCU's feed rate, among them feedstock quality and feed system hydraulics.

If an FCCU is feedstock-quality-limited, the optimal solvent extraction unit operation will use a light solvent to achieve the desired quality at the highest possible yield. For example, *n*-butane would produce a more acceptable DAO than *n*-pentane. Obviously, using *n*-butane instead of *n*-pentane is important to a refiner because the amount of FCCU feedstock can be increased without the detrimental effects of higher carbon and metals.

If an FCCU is operating at its hydraulic limit, the solvent extraction unit can only produce a fixed amount of DAO. Even though the FCCU feedstock quality may be satisfactory, if it is possible to shift to a lighter solvent, the refiner will benefit by producing a cleaner DAO. The cleanest DAO is produced by the lightest solvent that can achieve the desired DAO yield.

Downloaded from Digital Engineering Library @ McGraw-Hill (www.digitalengineeringlibrary.com)
Copyright © 2004 The McGraw-Hill Companies. All rights reserved.
Any use is subject to the Terms of Use as given at the website.

THE ROSE PROCESS

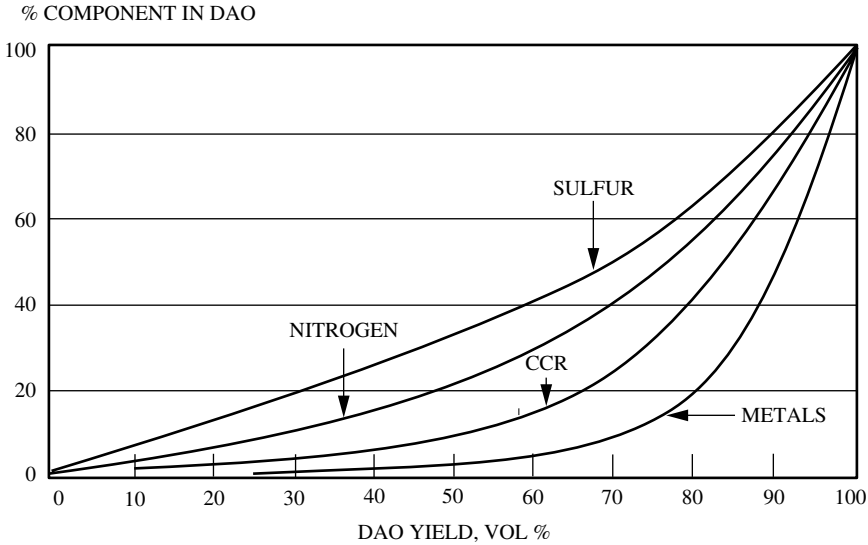

FIGURE 10.2.9 Typical contaminant distribution in DAO.

Factors such as market supply and demand and technology of downstream processes can change during the operating life of a solvent extraction unit, hence the need for a very flexible extraction unit. ROSE units are usually designed for operation over a range of solvent compositions. A light-solvent unit uses propane or *i*-butane while a heavy-solvent unit uses *n*-butane or pentane. This flexibility is made possible by the similarities in the product stripping section of *n*-pentane/*n*-butane units and *i*-butane/propane units.

The ultimate in operational flexibility is a unit that can run on all four solvents or mixtures of solvents, such as mixed butanes. This option is available at a slightly higher cost because of the flexibility inherent in the ROSE processes supercritical solvent recovery.

Since markets and technology do not always remain the same, today's bottom-of-the-barrel processing facilities must be flexible. This flexibility is inherent in a ROSE unit because of its ability to use different solvents. This flexibility, coupled with energy efficiency, makes the ROSE process the heavy oil processing technology of the future.

ROSE ECONOMICS SUMMARY

The estimated utility requirements for a grassroots ROSE unit are shown in Table 10.2.2. The figures provided in the table are the typical range of expected utility consumption. The actual values obtained in the final design will depend on process battery-limit conditions, site conditions, and optimized process conditions such as separator temperatures, stripper temperatures, and solvent/oil ratio.

The estimated installed cost for a 30,000 BPSD unit is $1250 per BPSD, U.S. Gulf Coast, second quarter of 2002.

Downloaded from Digital Engineering Library @ McGraw-Hill (www.digitalengineeringlibrary.com)
Copyright © 2004 The McGraw-Hill Companies. All rights reserved.
Any use is subject to the Terms of Use as given at the website.

THE ROSE PROCESS

TABLE 10.2.2 Utilities

*Process requirements per barrel of feed**

	Propane	Butane	Pentane
LP stripping steam, lb/bbl	12	12	12
Electricity, kWh/bbl	1.5–2.1	1.4–2.0	1.3–1.9
Process heat,† million Btu/bbl absorbed	0.097–0.147	0.070–0.104	0.057–0.086
Solvent loss, wt % of feed	0.05–0.10	0.05–0.10	0.05–0.10
Initial solvent fill, bbl/bbl	0.15	0.15	0.15
No other major chemicals or catalyst use is required.			

*Figures provided indicate typical range of expected utility consumption. Actual values will depend on process battery-limit conditions, site conditions, and optimized process conditions such as separator temperatures, stripper temperatures, and solvent/oil ratio.

†Process heat can be supplied by steam or hot oil.

BIBLIOGRAPHY

Abdel-Halim, T., and P. Shah: "Refinery Residuals as a Source of Chemical Feedstock and Value Added Products," APPEAL Resource and Training Consortium, Bangkok, Thailand, March 2002.

Abdel-Halim, T., R. Uppala, B. Bansal, R. Floyd, and D. Eastwood: "ROSE™ and Bottom-of-the-Barrel: A Synergistic Approach," Second Bottom of the Barrel Technology Conference, Istanbul, Turkey, October 2002.

Nelson, S. R., and R. G. Roodman: "ROSE: The Energy Efficient Bottom of the Barrel Alternative," 1985 Spring AICHE Meeting, Houston, Tex., March 1985.

Northup, A. H., and H. D. Sloan: "Advances in Solvent Deasphalting Technology," 1996 NPRA Annual Meeting, San Antonio, Tex., March 1996.

Patel, V. K., E. M. Roundtree, and H. D. Sloan: "Economic Benefits of ROSE/Fluid Coking Integration," 1997 NPRA Annual Meeting, San Antonio, Tex., March 1997.

Sloan, H. D., H. J. Simons, J. Griffths, and D. J. Bosworth: "Solvent Deasphalting and Gasification to Reduce Fuel Oil," 1996 European Oil Refining Conference, Antwerp, Belgium, June 1996.

Downloaded from Digital Engineering Library @ McGraw-Hill (www.digitalengineeringlibrary.com)
Copyright © 2004 The McGraw-Hill Companies. All rights reserved.
Any use is subject to the Terms of Use as given at the website.

Source: HANDBOOK OF PETROLEUM REFINING PROCESSES

CHAPTER 10.3
UOP SORBEX FAMILY OF TECHNOLOGIES

James A. Johnson
UOP LLC
Des Plaines, Illinois

INTRODUCTION

The Sorbex* name is applied to a technique, developed by UOP,* that is used to separate a component or group of components from a mixture by selective adsorption on a solid adsorbent. The Sorbex technology is a continuous process in which feed and products enter and leave the adsorbent bed at substantially constant composition. This technology simulates the countercurrent flow of a liquid feed over a solid bed of adsorbent without physically moving the solid. The principles of Sorbex technology are the same regardless of the type of separation being conducted. The following are examples of commercially proven UOP technologies based on the Sorbex principle; each makes use of a specific adsorbent-desorbent combination uniquely tailored to the specific separation:

- Parex*: separation of *para*-xylene from mixed C_8 aromatic isomers
- MX Sorbex*: *meta*-xylene from mixed C_8 aromatic isomers
- Molex*: linear paraffins from branched and cyclic hydrocarbons
- Olex*: olefins from paraffins
- Cresex*: *para*-cresol or *meta*-cresol from other cresol isomers
- Cymex*: *para*-cymene or *meta*-cymene from other cymene isomers
- Sarex*: fructose from mixed sugars

In addition to these applications, numerous other commercially interesting separations have been identified and demonstrated using the Sorbex process. These applications include monomethyl paraffins, 2,6-dimethyl naphthalene, ethylbenzene, 1-butene, ethyl toluenes, toluidines, terpenes, chloro and nitro aromatics, alpha and beta naphthols, alkyl naphthalenes, alpha olefins, and tall oil. Some of these separations have been commercialized under tolling agreements at a large-scale Sorbex plant that UOP has operated in Shreveport, Louisiana.

*Trademark and/or service mark of UOP.

Downloaded from Digital Engineering Library @ McGraw-Hill (www.digitalengineeringlibrary.com)
Copyright © 2004 The McGraw-Hill Companies. All rights reserved.
Any use is subject to the Terms of Use as given at the website.

UOP SORBEX FAMILY OF TECHNOLOGIES

The general principles of Sorbex technology are described in this chapter. Specific details on some of the Sorbex applications may be found in Chaps. 2.6 and 10.7.

PRINCIPLES OF ADSORPTIVE SEPARATION

Adsorbents can be visualized as porous solids. When the adsorbent is immersed in a liquid mixture, the pores fill with liquid, but the equilibrium distribution of components inside the pore is different from the distribution in the surrounding bulk liquid. The component distributions inside and outside the pores can be related to one another by enrichment factors analogous to relative volatilities in distillation. The adsorbent is said to be selective for any components that are more concentrated inside the pores than in the surrounding bulk liquid.

Adsorption has long been used for the removal of contaminants present at low concentrations in process streams. In some instances, the objective is removal of specific compounds. In other cases, the objective is improvement of general properties, such as color, taste, odor, or storage stability. Common adsorbents are generally classified as polar or nonpolar. Polar, or hydrophilic, adsorbents include silica gel, activated alumina, molecular sieves, and various clays. Nonpolar adsorbents include activated carbons and other types of coal-derived carbons. Polar adsorbents are used when the components to be removed are more polar than the bulk process liquid; nonpolar adsorbents are used when the target components are less polar. Particularly useful are those adsorbents based on synthetic crystalline zeolites, which are generically referred to as *molecular sieves.* A wide variety of selectivities can be obtained in molecular sieves by varying the silica/alumina ratio, crystalline structure, and nature of the replaceable cations in the crystal lattice.

In one commercial separation, linear paraffins are separated from branched-chain and cyclic hydrocarbons by adsorption on 5A molecular sieves. The diameter of the pores is such that only the linear molecules may enter, and branched or cyclic molecules are completely excluded. In this case, the selectivity for linear hydrocarbons is infinite, and the adsorbent acts as a true molecular sieve. Adsorbents that completely exclude unwanted components are rare. In most applications, the pores are large enough to admit molecules of all the components present, and selectivity is the result of electronic interactions between the surface of the adsorbent pores and the individual components.

Adsorption is more efficient than conventional techniques such as liquid-liquid extraction or extractive distillation for many commercially important separations. Considerable development work has identified many adsorbents that are much more selective for specific components than any known solvents. In addition, adsorptive separation exhibits much higher mass-transfer efficiency than conventional extraction or extractive distillation. For example, laboratory chromatographs commonly achieve separation efficiencies equivalent to many thousands of theoretical equilibrium stages in columns of modest length. Such high mass-transfer efficiency stems from the use of small particles of adsorbent with high interfacial area and the absence of significant axial mixing.

In contrast, the trays of conventional liquid-liquid extractors and distillation columns are designed to obtain almost complete axial mixing in each physical stage. Thus, the number of theoretical equilibrium stages is essentially limited to the number of physical stages installed. In theory, this limitation can be partly overcome by the use of packed columns. However, if the packing is small enough to provide interfacial area comparable to that of an adsorbent, maintaining uniform countercurrent flow of the vapor and liquid phases becomes difficult. This flow limitation is less troublesome in an adsorptive system because only one fluid phase is involved.

Downloaded from Digital Engineering Library @ McGraw-Hill (www.digitalengineeringlibrary.com)
Copyright © 2004 The McGraw-Hill Companies. All rights reserved.
Any use is subject to the Terms of Use as given at the website.

UOP SORBEX FAMILY OF TECHNOLOGIES

THE SORBEX CONCEPT

In spite of the potential advantages of adsorptive separation, it did not achieve wide commercial acceptance until the introduction of the UOP Sorbex process in the early 1960s. Prior to the Sorbex process, adsorptive processes were designed much as laboratory chromatographs. Feed was introduced in pulses, and the composition of products varied with time. Integrating such an intermittent process with continuous processes operating both upstream and downstream was difficult. The Sorbex process, for the first time, offered a truly continuous adsorptive separation process that produced products with essentially constant compositions.

The easiest way to understand the Sorbex process is to think of it as a countercurrent flow of liquid feed and solid adsorbent (Fig. 10.3.1). For simplicity, assume the feed is a binary mixture of components A and B, and the adsorbent has a selective attraction for component A. In practice, the feed to a Sorbex unit may contain a multitude of components from which one or more components would be selectively recovered.

The positions of injection and withdrawal of the four net streams divide the adsorbent bed in four zones:

- *Zone 1: adsorption of component A.* This zone is between the point of feed injection and raffinate withdrawal. As the feed flows down through zone 1, countercurrent to the solid adsorbent flowing upward, component A is selectively adsorbed from the feed into the pores of the adsorbent. At the same time, the desorbent (component D) is desorbed from the pores of the adsorbent to the liquid stream to make room for A in the pores.
- *Zone 2: desorption of component B.* This zone is between the point of feed injection and extract withdrawal. At the fresh-feed point, the upward-flowing solid adsorbent contains the quantity of component A that was adsorbed in zone 1. However, the pores will also contain a large amount of component B, because the adsorbent has just been in contact with fresh feed. The liquid entering the top of zone 2 contains no B, only A and D.

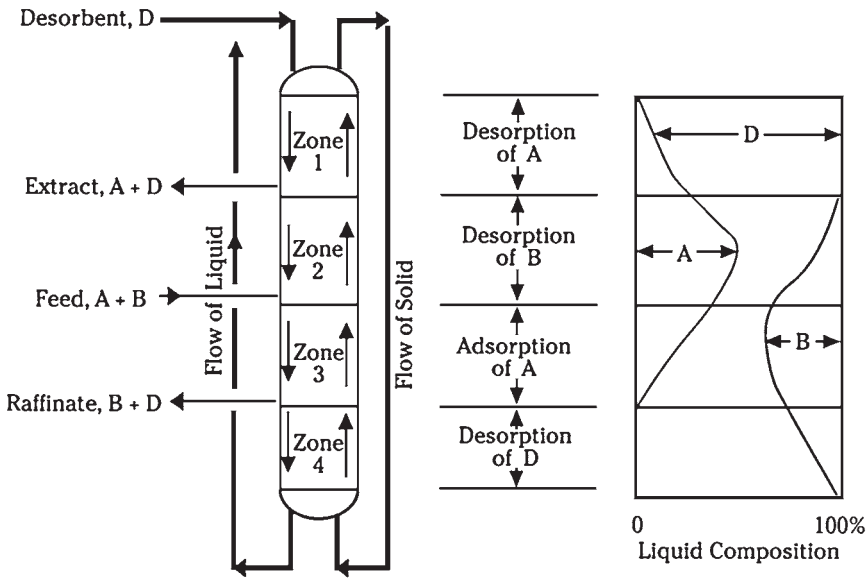

FIGURE 10.3.1 Moving-bed analogy.

Downloaded from Digital Engineering Library @ McGraw-Hill (www.digitalengineeringlibrary.com)
Copyright © 2004 The McGraw-Hill Companies. All rights reserved.
Any use is subject to the Terms of Use as given at the website.

UOP SORBEX FAMILY OF TECHNOLOGIES

Thus, B is gradually displaced from the pores by A and D as the adsorbent moves up through zone 2. At the top of zone 2, the pores of the adsorbent contain only A and D.

- *Zone 3: desorption of component A.* This zone is between the point of desorbent injection and extract withdrawal. The adsorbent entering zone 3 carries only components A and D. The liquid entering the top of the zone consists of pure D. As the liquid stream flows downward, component A in the pores is displaced by D. A portion of the liquid leaving the bottom of zone 3 is withdrawn as extract; the remainder flows downstream into zone 2 as reflux.
- *Zone 4: isolation zone.* The main purpose of zone 4 is to segregate the feed components in zone 1 from the extract in zone 3. At the top of zone 3, the adsorbent pores are completely filled with component D. The liquid entering the top of zone 4 consists of B and D. Properly regulating the flow rate of zone 4 prevents the flow of component B into zone 3 and avoids contamination of the extract.
- *Zone 4: isolation zone.* The main purpose of zone 4 is to segregate the feed components in zone 1 from the extract in zone 3. At the top of zone 3, the adsorbent pores are completely filled with component D. The liquid entering the top of zone 4 consists of B and D. Properly regulating the flow rate of zone 4 prevents the flow of component B into zone 3 and avoids contamination of the extract.

The desorbent liquid must have a boiling point significantly different from those of the feed components. In addition, the desorbent must be capable of displacing the feed components from the pores of the adsorbent. Conversely, the feed components must be able to displace the desorbent from the adsorbent pores. Thus, the chosen desorbent must be able to compete with the feed components for any available active pore space in the solid adsorbent solely on the basis of concentration gradients.

DESCRIPTION OF THE PROCESS FLOW

In practice, actually moving a solid bed of adsorbent is difficult. The biggest problem in commercial-size units is ensuring uniform plug flow across large-diameter vessels while minimizing axial mixing. In the Sorbex process, the countercurrent flow of liquid feed and solid adsorbent is accomplished without physical movement of the solid. Instead, countercurrent flow is *simulated* by periodically changing the points of liquid injection and withdrawal along a stationary bed of solid adsorbent. In this *simulated moving-bed* technique, the concentration profile shown in Fig. 10.3.1 actually moves down the adsorbent chamber. As the concentration profile moves, the points of injection and withdrawal of the net streams to the adsorbent chamber are moved along with it.

A simplified flow diagram for a typical Sorbex unit is shown in Fig. 10.3.2. The separation takes place in the adsorbent chamber, which is divided into a number of adsorbent beds. Each bed of adsorbent is supported from below by a specialized grid that also contains a highly engineered flow distributor. Each flow distributor is connected to the rotary valve by a "bed line." The flow distributors between each adsorbent bed are used to inject or withdraw liquid from the chamber or to simply redistribute the liquid over the cross-sectional area of the adsorbent chamber. The numbers of adsorbent beds and bed lines vary with the Sorbex application.

In the Sorbex process, four major streams are distributed to and from the adsorbent chamber by the rotary valve. These *net* streams include

- *Feed in:* raw mixture of all feed components

Downloaded from Digital Engineering Library @ McGraw-Hill (www.digitalengineeringlibrary.com)
Copyright © 2004 The McGraw-Hill Companies. All rights reserved.
Any use is subject to the Terms of Use as given at the website.

UOP SORBEX FAMILY OF TECHNOLOGIES

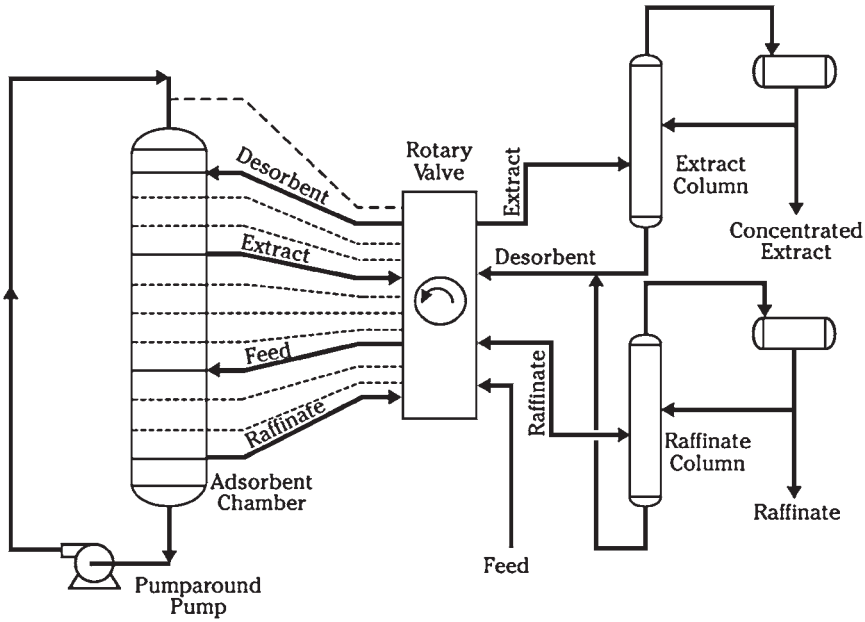

FIGURE 10.3.2 Sorbex flow diagram.

- *Dilute extract out:* selectively adsorbed component or components diluted with desorbent
- *Dilute raffinate out:* rejected components diluted with desorbent
- *Desorbent in:* recycle desorbent from the fractionation section

At any given time, only four of the bed lines are actively carrying the net streams into and out of the adsorbent chamber. The movement of the net streams along the adsorbent chamber is effected by a unique rotary valve, specifically developed by UOP for the Sorbex process. Although, in principle, this switching action could be duplicated with a large number of separate on/off control valves, the UOP rotary valve simplifies the operation of the Sorbex unit and improves reliability.

Functionally, the adsorbent chamber has no top or bottom. A pumparound pump is used to circulate process liquid from the last adsorbent bed at the bottom of the adsorbent chamber to the first bed at the top of the chamber. The concentration profile in the adsorbent chamber moves smoothly down past the last bed, through the pump, and back into the first bed. The actual liquid flow rate within each of the four zones is different because the rate of addition or withdrawal of each net stream is different. As the concentration profile moves down the adsorbent chamber, the zones also move down the chamber. The overall liquid circulation rate is controlled by the pumparound pump. This pump operates at four different flow rates, depending on which zone is passing through the pump.

The dilute extraction from the rotary valve is sent to the extract column for separation of the extract from the desorbent. The dilute raffinate from the rotary valve is sent to the raffinate column for separation of the raffinate from the desorbent. The desorbent from the bottom of both the extract and raffinate columns is recycled to the adsorbent chamber through the rotary valve.

Downloaded from Digital Engineering Library @ McGraw-Hill (www.digitalengineeringlibrary.com)
Copyright © 2004 The McGraw-Hill Companies. All rights reserved.
Any use is subject to the Terms of Use as given at the website.

UOP SORBEX FAMILY OF TECHNOLOGIES

COMPARISON WITH FIXED-BED ADSORPTION

Comparing the characteristics of continuous Sorbex operation with the batch operation of conventional liquid chromatography is interesting. In a conventional chromatographic separation (Fig. 10.3.3), pulses of feed and desorbent are alternately charged to a fixed bed of adsorbent. Once again, assume that the feed is a binary mixture of components A and B. As the feed components move through the adsorbent bed, they gradually separate as the less strongly adsorbed component B moves faster than the more strongly adsorbed component A. A second pulse of feed must be delayed long enough to ensure that the fast-moving band of component B from the second pulse does not overtake the slow-moving band of component A from the first pulse.

A mathematical comparison of the Sorbex process with batch chromatography has shown that the batch operation requires 3 to 4 times more adsorbent inventory than the Sorbex process does and twice as much circulation of desorbent. This large difference in adsorbent requirement can be explained in physical terms without going into the details of the mathematical analysis. In the Sorbex process, every portion of the adsorbent bed is performing a useful function at all times. In batch chromatography, portions of the adsorbent bed at various times perform no useful function. This situation is most clearly seen near the entrance of the batch chromatograph. As feed enters the adsorbent bed, the adsorbent near the entrance rapidly comes to complete equilibrium with the feed. As feed continues to enter, this section of the adsorbent serves no purpose other than to convey feed farther down into the bed. A similar situation occurs when desorbent is introduced. Other nonproductive zones exist within the adsorbent bed, between pulses of feed, where excess desorbent is required to keep the bands of component B from overtaking the bands of component A.

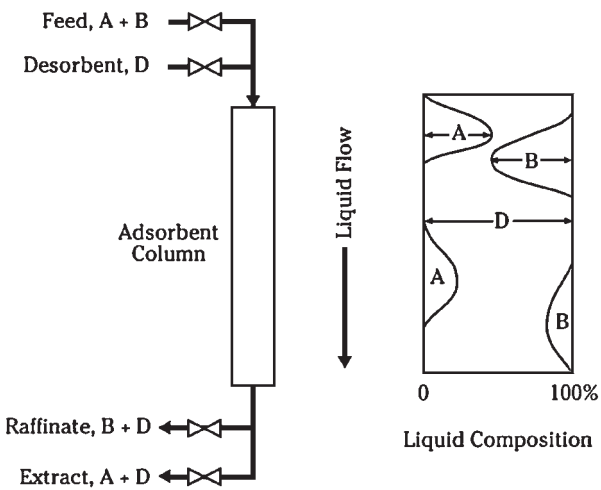

FIGURE 10.3.3 Batch absorption.

Downloaded from Digital Engineering Library @ McGraw-Hill (www.digitalengineeringlibrary.com)
Copyright © 2004 The McGraw-Hill Companies. All rights reserved.
Any use is subject to the Terms of Use as given at the website.

UOP SORBEX FAMILY OF TECHNOLOGIES

COMMERCIAL EXPERIENCE

Invented by UOP in the 1960s, the Sorbex technique was the first large-scale commercial application of continuous adsorptive separation. The first commercial Sorbex unit, a Molex unit for the separation of linear paraffins, came on-stream in 1964. The first commercial Parex unit came on-stream in 1971. UOP has licensed more than 130 Sorbex units throughout the world, including 78 Parex units, 6 MX Sorbex units, 37 Molex units, 6 Olex units, 5 Sarex units, 1 Cresex unit, and 1 Cymex unit. Most applications of the Sorbex process deliver high-purity products that can be sold or used in downstream technologies. For example, *para*-xylene is produced directly at 99.9 percent purity at very high recovery and can be oxidized directly to produce purified terephthalic acid (PTA). The C_{10}-C_{13} *n*-paraffins are produced at 99.5 percent purity and converted to linear olefins as precursors to biodegradable detergents. However, there are some applications in which the design of the Sorbex process can be simplified. One example is the UOP Hysorb* process which is used for producing a concentrated *para*-xylene stream from mixed xylenes. This concentrated stream can then be fed directly to a single-stage crystallizer for recovery of high-purity *para*-xylene. This type of application is useful in debottlenecking multistage crystallizers whose recovery is limited by eutectic compositions. Another simplified Sorbex design is the UOP Gasoline Molex* process. This technology is used for recovery of C_5- and C_6 *n*-paraffins from light naphtha. The extract can be processed in a Penex unit,* which can isomerize the *n*-paraffins to their high-octane branched counterparts.

BIBLIOGRAPHY

1. Gembicki, S. A., J. A. Johnson, A. R. Oroskar, and J. E. Rekoske: "Adsorption, Liquid Separation," *Kirk-Othmer Encyclopedia of Chemical Technology,* Wiley, 2002.
2. Johnson, J. A.: "Sorbex: Continuing Innovation in Liquid Phase Adsorption," Advanced Study Institute on Adsorption, Vimeiro, Portugal, July 1988.
3. Johnson, J. A., and A. R. Oroskar: "Sorbex Technology for Industrial-Scale Separations," International Symposium on Zeolites as Catalysts, Sorbents, and Detergent Builders, Wurzburg, Germany, September 1988.
4. Johnson, J. A., and H. A. Zinnen: "Sorbex: A Commercially Proven Route to High Purity Chemicals," *Proc. Royal Swedish Academy of Engineering Sciences Symposium,* Stockholm, March 1987.
5. Kulprathipanja, S., and J. A. Johnson: *Handbook of Porous Solids,* Chapter 6.4, "Liquid Separations," J. Weitkamp (ed.), Wiley-VCH, Weinheim, Germany, 2001.
6. Millard, M. T., J. A. Johnson, and R. G. Kabza: "Sorbex: A Versatile Tool for Novel Separations," UOP Technology Conferences, various locations, September 1988.

*Trademark and/or service mark of UOP.

Downloaded from Digital Engineering Library @ McGraw-Hill (www.digitalengineeringlibrary.com)
Copyright © 2004 The McGraw-Hill Companies. All rights reserved.
Any use is subject to the Terms of Use as given at the website.

Downloaded from Digital Engineering Library @ McGraw-Hill (www.digitalengineeringlibrary.com)
Copyright © 2004 The McGraw-Hill Companies. All rights reserved.
Any use is subject to the Terms of Use as given at the website.

Source: HANDBOOK OF PETROLEUM REFINING PROCESSES

CHAPTER 10.4
UOP/FW USA SOLVENT DEASPHALTING PROCESS

Daniel B. Gillis
UOP LLC
Des Plaines, Illinois

Fred M. Van Tine
Foster Wheeler USA Corporation
Houston, Texas

INTRODUCTION

The UOP/FWUSA Solvent Deasphalting (UOP/FWUSA SDA) process is a solvent extraction process developed and jointly offered by UOP* and Foster Wheeler USA Corporation (FW) for the processing of vacuum residues (VR) or atmosphere residues (AR) feedstock. The UOP/FWUSA process contains process features from both UOP's Demex* solvent extraction process and FW's LEDA solvent deasphalting process. This combination of features has resulted in an advanced solvent deasphalting technology (UOP/FWUSA Solvent Deasphalting process) that is capable of achieving the highest product qualities with the lowest operating costs. The UOP/FWUSA SDA process employs a unique combination of features to separate VR into components whose uses range from incremental feedstock for downstream conversion units to the production of lube base stock and asphalts. Because the UOP/FWUSA process provides the refiner with increased flexibility regarding future processing decisions, including crude section, refinery debottlenecking, and the potential to reduce crude runs and fuel oil yields, it represents an important element in the refiner's overall bottom-of-the-barrel processing strategy.

PROCESS DESCRIPTION

The UOP/FWUSA SDA process typically divides VR into two components: a relatively contaminant-free nondistillable deasphalted oil (DAO) and a highly viscous pitch. Like propane deasphalting, the UOP/FWUSA SDA process is based on the ability of light

*Trademark or service mark of UOP LLC.

Downloaded from Digital Engineering Library @ McGraw-Hill (www.digitalengineeringlibrary.com)
Copyright © 2004 The McGraw-Hill Companies. All rights reserved.
Any use is subject to the Terms of Use as given at the website.

UOP/FW USA SOLVENT DEASPHALTING PROCESS

paraffin hydrocarbons to separate the residue's heavier asphaltenic components. Associated with these heavier materials is the majority of the crude's contaminants. Consequently, the lower contaminant content of the recovered DAO allows this material to be used in many refining applications, probably the most important of which is as increment feedstock to catalytic processes such as fluid catalytic cracking (FCC) or hydrocracking for conversion into transportation fuel products.

Because the pitch recorded from the UOP/FWUSA SDA unit contains most of the contaminants present in the crude, it typically has a high viscosity and a relatively low penetration value. Commercially, UOP/FWUSA SDA pitch has been used in the manufacturing of asphalts and cement and as a blending component in refinery fuel oil pools. Other potential uses include the production of hydrogen, synthesis gas, or low-Btu fuel gas and as a solid-fuel blending component.

Unlike conventional propane deasphalting, the UOP/FWUSA SDA process uses a unique combination of heavier solvents, supercritical solvent techniques, and patented extractor internals to efficiently recover high-quality DAO at high yield. A schematic flow scheme of a modern UOP/FWUSA SDA design is shown in Fig. 10.4.1. This design, which has evolved from experience gained from both pilot-plant and commercial operations as well as detailed engineering analyses of its various components, minimizes operating and capital costs and efficiently recovers the desired product yields at the required product qualities.

Incoming VR is mixed with solvent and fed to the vertical extractor vessel. At the appropriate extractor conditions, the VR-solvent blend is separated into its DAO and pitch components. The yield and quality of these components are dependent on the amount of contaminants in the feedstock, the composition and quantity of solvent used, and the operating conditions of the extractor.

With the extractor, the downflowing asphaltene-rich pitch component and the upflowing DAO solvent mixture are separated by patented extractor internals. The extractor design also includes a unique liquid flow distribution system to minimize the possibility

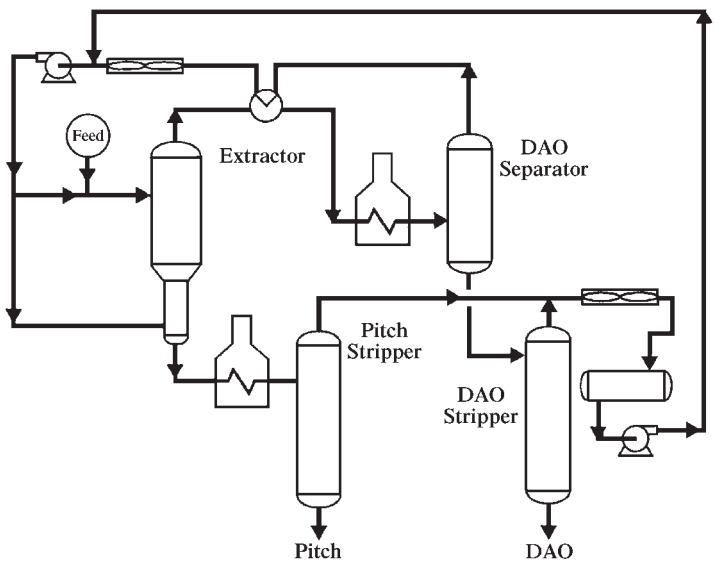

FIGURE 10.4.1 Schematic flow diagram of UOP/FW USA SDA process.

Downloaded from Digital Engineering Library @ McGraw-Hill (www.digitalengineeringlibrary.com)
Copyright © 2004 The McGraw-Hill Companies. All rights reserved.
Any use is subject to the Terms of Use as given at the website.

UOP/FW USA SOLVENT DEASPHALTING PROCESS

of fouling the internals. Compared to previous designs, the increased separation efficiency achieved by these two features significantly reduces the size of the extractor vessel and the overall cost of the UOP/FWUSA SDA unit.

The combination of heat exchange with recovered solvent and a direct-fired heater or a hot oil heating fluid heats the DAO solvent mixture leaving the top of the extractor to its critical temperature. The separation of the DAO and solvent components of this mixture is accomplished at supercritical conditions within the DAO separator. Recovered solvent is recycled back to the extractor. Because most of the solvent is recovered supercritically, this material can be effectively used for process heat exchange. Consequently, compared to earlier subcritical solvent-recovery designs, supercritical solvent recovery can reduce utilities requirements by more than one-third.

To minimize solvent loss, any traces of solvent remaining in both the DAO exiting the DAO separator and the pitch from the extractor are recovered in the DAO and pitch strippers, respectively. This recovered solvent is also recycled to the extractor. If the recovery of an intermediate-quality resin stream is desired—for instance, when specialty asphalts are produced or when independent control of DAO and pitch quality is desired—a resin settler may be added between the unit's extractor and DAO separator.

TYPICAL FEEDSTOCKS

The SDA process (normally using propane or a propane-butane mixture as the solvent) has been in commercial use for the preparation of lubricant-bright-stock feeds from asphalt-bearing crude residue for many years.[8,9] Many commercial SDA units have also been used for preparing paving and specialty asphalts from suitable vacuum residues.

The increasing use of the fluid catalytic cracking (FCC) process together with the increasing price of crude oil resulted in the need to maximize the quantity of FCC feedstock obtained from each barrel of crude. These conditions led to the extension of the SDA process to the preparation of cracking feedstocks from vacuum residues. The current trend for maximizing distillate oil production has also prompted the increased use of the SDA process to prepare hydrocracking feedstocks from vacuum residues.

SDA supplements vacuum distillation by recovering additional high-quality paraffinic oil from vacuum residues beyond the range of practical distillation. Although atmospheric residues have been commercially solvent-deasphalted, typical SDA feedstocks are 570°C+ (1060°F+) TBP cut-point vacuum residues. These vacuum residues often contain high levels of metals (primarily nickel and vanadium), carbon residue, nitrogen, sulfur, and asphaltenes. Table 10.4.1 gives three examples of vacuum residue feedstocks, covering a wide range of properties, that can be processed in an SDA unit.

TABLE 10.4.1 Typical SDA Feedstocks

	Vacuum residue TBP cut point, °C	Gravity, °API	Conradson carbon residue, wt %	Sulfur, wt %	Ni + V, wt ppm
Heavy Arabian	570	3.6	25.1	5.5	193
Heavy Canadian	570	8.1	17.4	2.7	110
Canadian	570	11.7	15.0	1.5	50

Downloaded from Digital Engineering Library @ McGraw-Hill (www.digitalengineeringlibrary.com)
Copyright © 2004 The McGraw-Hill Companies. All rights reserved.
Any use is subject to the Terms of Use as given at the website.

UOP/FW USA SOLVENT DEASPHALTING PROCESS

PRODUCT YIELDS AND QUALITY

The VR fraction of a crude is the usual feedstock for the UOP/FWUSA SDA process. Typical properties of both the vacuum gas oil (VGO) and VR fractions of two common Middle Eastern crudes are presented in Table 10.4.2. As this table illustrates, the VR fraction contains virtually all the crude's asphaltenic (C_7 insolubles) and organometallic (V + Ni) contaminants and most of the crude's Conradson carbon residue. Each of these contaminants can significantly influence the choice of processing conditions and catalysts used in fixed-bed processing units.

The UOP/FWUSA SDA process can be used to selectively reject the majority of these contaminants. Examples of DAO properties obtained at various extraction levels when processing the two Arabian-based VRs described in Table 10.4.2 are summarized in Tables 10.4.3 and 10.4.4. The selectivity of the process for contaminant rejection is illustrated by the absence of asphaltenes and the significantly reduced amounts of organometallics and Conradson carbon in the recovered DAO. These tables also illustrate that DAO quality decreases with increasing DAO yield. For the Arabian Light case, this decrease results in a variation in demetallization ranging from roughly 98 percent organometallic rejection at 40 percent DAO yield to approximately 80 percent rejection at 78 percent DAO yield. The same deterioration in DAO quality with increasing DAO yield is observed for the Arabian Heavy feed case.

Estimated properties of the UOP/FWUSA SDA process pitches recovered from the two Arabian feedstock cases are presented in Tables 10.4.5 and 10.4.6. At the higher DAO recovery rates, these materials have zero penetration and can be blended with softer VRs to produce acceptable penetration-grade asphalts.

TABLE 10.4.2 Feedstock Properties

Feedstock	Reduced crude	VGO	Vacuum residue
	Arabian Light		
Cutpoint, °C (°F)	343+ (650+)	343–566 (650–1050)	566+ (1050+)
Crude, LV %	38.8	26.3	12.5
Specific gravity	0.9535	0.9206	1.0224
Sulfur, wt %	3.0	2.48	4.0
Nitrogen, wt %	0.16	0.08	0.31
Conradson carbon residue, wt %	8.2	0.64	20.8
Metals (V + Ni), wt ppm	34	0	98
UOP K factor	11.7	11.8	11.4
C_7 insolubles, wt %	3.5	0	10
	Arabian Heavy		
Cutpoint, °C (°F)	343+ (650+)	343–566 (650–1050)	565+ (1050+)
Crude, LV %	53.8	30.6	23.2
Specific gravity	0.9816	0.9283	1.052
Sulfur, wt %	4.34	2.92	6.0
Nitrogen, wt %	0.27	0.09	0.48
Conradson carbon residue, wt %	13.3	0.99	27.7
Metals (V + Ni), wt ppm	125	0	269
UOP K factor	11.5	11.7	11.3
C_7 insolubles, wt %	6.9	0	15

Downloaded from Digital Engineering Library @ McGraw-Hill (www.digitalengineeringlibrary.com)
Copyright © 2004 The McGraw-Hill Companies. All rights reserved.
Any use is subject to the Terms of Use as given at the website.

UOP/FW USA SOLVENT DEASPHALTING PROCESS

TABLE 10.4.3 DAO Properties of Arabian Light

	DAO yield, LV % of vacuum residue		
	40	60	78
Specific gravity	0.9406	0.9638	0.9861
Sulfur, wt %	2.34	2.83	3.25
Nitrogen, wt %	0.1	0.15	0.21
Metals (V + Ni), wt ppm	3	7	19
Conradson carbon residue, wt %	2.85	6.36	10.7
C_7 insolubles, wt %	—	—	0.05
UOP K factor	11.9	11.7	11.6

TABLE 10.4.4 DAO Properties of Arabian Heavy

	DAO yield, LV % of vacuum residue	
	30	55
Specific gravity	0.9576	0.9861
Sulfur, wt %	3.53	4.29
Nitrogen, wt %	0.14	0.2
Metals (V + Ni), wt ppm	16	38
Conradson carbon residue, wt %	4.79	10.1
C_7 insolubles, wt %	—	<0.05
UOP K factor	12.0	11.8

TABLE 10.4.5 Pitch Properties of Arabian Light

	SDA extraction level, LV % of vacuum residue		
	40	60	78
Yield, LV % of reduced crude	19.3	12.9	7.0
Specific gravity	1.0769	1.11	1.154
Sulfur, wt %	4.96	5.52	6.31
Metals (V + Ni), wt ppm	154	216	341
Softening point, °C (°F)	88 (190)	102 (215)	177 (368)

Physical Properties

DAO physical properties are affected as follows as the DAO yield increases:

1. *Specific gravity.* Specific gravity increases as DAO yield increases (DAO becomes heavier). See Table 10.4.7.
2. *Viscosity.* Viscosity increases as DAO yield increases (which corresponds to a heavier DAO). See Table 10.4.7.
3. *Heptane insolubles.* Content of heptane insolubles (asphaltenes) remains very low as DAO yield increases. Nevertheless, the asphaltenes content of the DAO will increase,

Downloaded from Digital Engineering Library @ McGraw-Hill (www.digitalengineeringlibrary.com)
Copyright © 2004 The McGraw-Hill Companies. All rights reserved.
Any use is subject to the Terms of Use as given at the website.

UOP/FW USA SOLVENT DEASPHALTING PROCESS

TABLE 10.4.6 Pitch Properties of Arabian Heavy

	SDA extraction level, LV % of vacuum residue	
	30	55
Yield, LV % of reduced crude	30.2	19.4
Specific gravity	1.0925	1.1328
Sulfur, wt %	6.93	7.82
Metals (V + Ni), wt ppm	364	515
Softening point, °C (°F)	104 (219)	149 (300)

TABLE 10.4.7 Solvent-Deasphalting Heavy Arabian Vacuum Residue: DAO Properties

	Vacuum residue	DAO yield, vol % on feed			
		15.1	47.4	65.3	73.8
Gravity, °API	3.6	20.3	14.6	10.8	9.4
Viscosity at 100°C, SSU	70,900	183	599	1590	2540
Viscosity at 150°C, SSU	3,650	82.5	132	263	432
Pour point, °C	74	54	32	38	41
Heptane insolubles, wt %	16.2	0.01	0.01	0.01	0.03

Source: J. C. Dunmyer, "Flexibility for the Refining Industry," *Heat Eng.,* 53–59 (October–December 1977).

approaching the feedstock asphaltene content as DAO yield approaches 100 percent. See Table 10.4.7.

4. *Pour point.* At low DAO yields the pour point is high, consistent with the paraffinic character of the DAO. As DAO yield increases, less paraffinic material is dissolved, which in many cases is reflected in a decreasing pour point. As DAO yield continues to increase, the pour point will ultimately near the feed pour point for DAO yields, approaching 100 percent. See Table 10.4.7.

Sulfur

The sulfur distribution between the DAO and the pitch is a function of DAO yield. Figure 10.4.2 shows a typical relationship between the ratio of sulfur concentration in the DAO to sulfur concentration in the feed as a function of DAO yield. This figure shows an average sulfur distribution trend and also maximum and minimum ranges expected for a wide number of vacuum residue feedstocks. For a specific feedstock, the sulfur distribution relationship is close to linear, especially as DAO yield increases above 50 vol %.[18,19]

The ability of a solvent to reject the feedstock sulfur into the asphalt selectively is not as pronounced as its ability to reject metal contaminants such as nickel and vanadium selectively.[16] This is illustrated in Fig. 10.4.6. The sulfur atoms are more evenly distributed between the paraffinic and aromatic molecules than the metal contaminants, which are heavily concentrated in the aromatic molecules. In many cases, the fact that the metal content in the DAO is low makes hydrodesulfurization of high-yield DAO technically feasible and economically attractive.

Downloaded from Digital Engineering Library @ McGraw-Hill (www.digitalengineeringlibrary.com)
Copyright © 2004 The McGraw-Hill Companies. All rights reserved.
Any use is subject to the Terms of Use as given at the website.

UOP/FW USA SOLVENT DEASPHALTING PROCESS

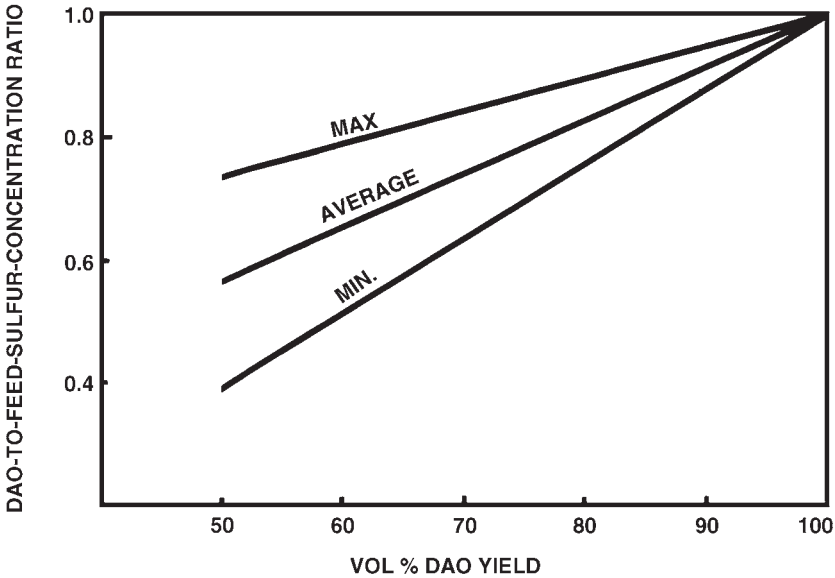

FIGURE 10.4.2 Ratio of sulfur concentration in DAO to sulfur concentration in the feedstock versus DAO yield.

Nitrogen

Figure 10.4.3 shows the ratio of the nitrogen in the DAO to the nitrogen in the feed as a function of DAO yield. It shows the average nitrogen distribution trend and the maximum and minimum expected for a wide variety of vacuum residue feedstocks. As shown by a straight line on a semilog plot, this relationship is exponential. Figure 10.4.3 shows that there is little difference among various vacuum residues in the solvent's ability to reject nitrogen into the asphalt selectively. The difference between the maximum and minimum expected values is significantly lower than in the sulfur distribution plot (Fig. 10.4.2).

SDA exhibits a better ability to reject selectively nitrogen-containing compounds than sulfur-containing compounds.[1,16] (See Fig. 10.4.6.)

Metals

The ratio of DAO metal content (Ni + V) to feedstock metal content as a function of DAO yield is shown in Fig. 10.4.4. The straight lines in the figure show that DAO metals content is an exponential function of DAO yield.

This trend has been previously reported.[1,16] Figure 10.4.4 also shows that metal distribution is a strong function of the feedstock API gravity. The data in the figure illustrate an average relationship; however, some feedstocks such as Canadian sour and Tia Juana vacuum residues deviate substantially from the average trend. Pilot-plant data are normally required to determine the exact DAO yield-quality relationship for a previously untested feedstock.

The nickel and vanadium distributions between the DAO and asphalt are similar but not equal.[16] (See Fig. 10.4.6.) Figure 10.4.4 shows that metals are rejected from DAO to a

Downloaded from Digital Engineering Library @ McGraw-Hill (www.digitalengineeringlibrary.com)
Copyright © 2004 The McGraw-Hill Companies. All rights reserved.
Any use is subject to the Terms of Use as given at the website.

UOP/FW USA SOLVENT DEASPHALTING PROCESS

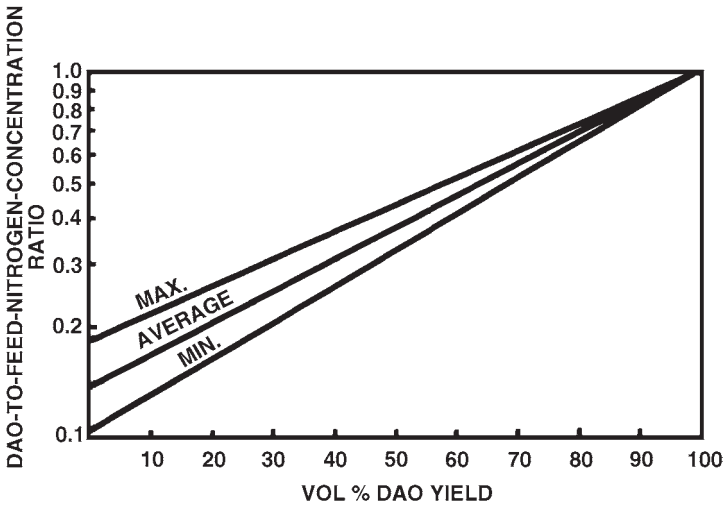

FIGURE 10.4.3 Ratio of nitrogen concentration in DAO to nitrogen concentration in the feedstock versus DAO yield.

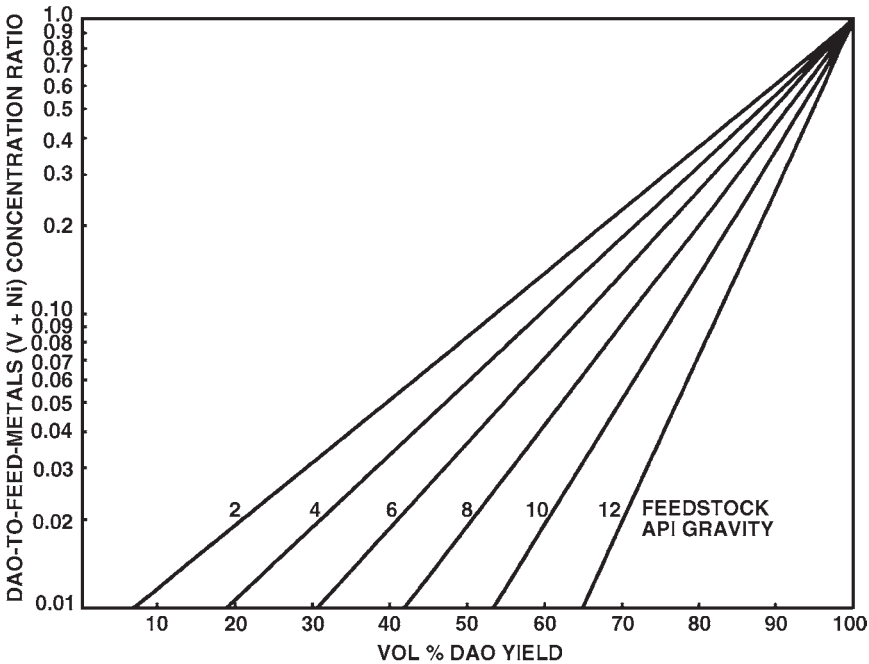

FIGURE 10.4.4 Ratio of metal (Ni + V) concentration in DAO to metal (Ni + V) concentration in the feedstock versus DAO yield.

Downloaded from Digital Engineering Library @ McGraw-Hill (www.digitalengineeringlibrary.com)
Copyright © 2004 The McGraw-Hill Companies. All rights reserved.
Any use is subject to the Terms of Use as given at the website.

UOP/FW USA SOLVENT DEASPHALTING PROCESS

much greater extent than sulfur and nitrogen. For example, in deasphalting heavy Arabian vacuum residue at a 65 vol % DAO yield, the following are the ratios of the contaminant level in the DAO to the contaminant level in the feedstock:

Sulfur	72.7%
Nitrogen	50.0%
Nickel	13.8%
Vanadium	16.3%
CCR	49.0%

The high rejection of metals from DAO is of extreme importance in the catalytic processing of DAO. It is possible catalytically to hydroprocess DAO economically owing to the low metals content of DAO obtained even from a high-metal-content vacuum residue.

Conradson Carbon Residue

The deasphalting solvent exhibits a moderate selectivity for carbon rejection from DAO; the selectivity is similar to that of nitrogen rejection but significantly higher than that of sulfur rejection.

Conradson carbon residue* (CCR) in DAO has a less detrimental effect on the cracking characteristics of DAO than it has in the case of distillate stocks.[4] DAO with 2 wt % CCR is an excellent FCC feedstock; it actually produces less coke and more gasoline than coker distillates.

Figure 10.4.5 shows that the ratio of CCR in DAO to CCR in the feed is an exponential function of DAO yield. As in the case of metals concentrations, the relationship is also a strong function of feedstock API gravity. The data in Fig. 10.4.5 illustrate an average relationship for a number of feedstocks and should not be considered a design correlation.

As in the case of metals, some feedstocks, such as Canadian sour and Tia Juana, deviate substantially from the average trend.

See also Fig. 10.4.6.

PROCESS VARIABLES

Several process variables affect the yield and quality of the various products. These variables include extraction pressure and temperature, solvent composition, and extraction efficiency.

Extraction Pressure and Temperature

Extraction pressure, which is chosen to ensure that the SDA extractor's solvent-residue mixture is maintained in a liquid state, is related to the critical pressure of the solvent used.

*Conradson carbon residue is a standard test (ASTM D 189) used to determine the amount of residue left after evaporation and pyrolysis of an oil sample under specified conditions. The CCR is reported as a weight percent. It provides an indication of the relative coke-forming propensities of an oil sample.

Downloaded from Digital Engineering Library @ McGraw-Hill (www.digitalengineeringlibrary.com)
Copyright © 2004 The McGraw-Hill Companies. All rights reserved.
Any use is subject to the Terms of Use as given at the website.

UOP/FW USA SOLVENT DEASPHALTING PROCESS

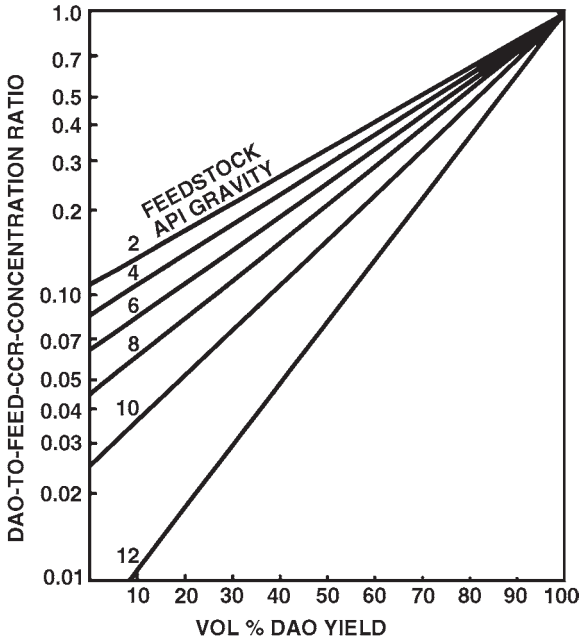

FIGURE 10.4.5 Ratio of CCR in DAO to CCR in feedstock versus DAO yield.

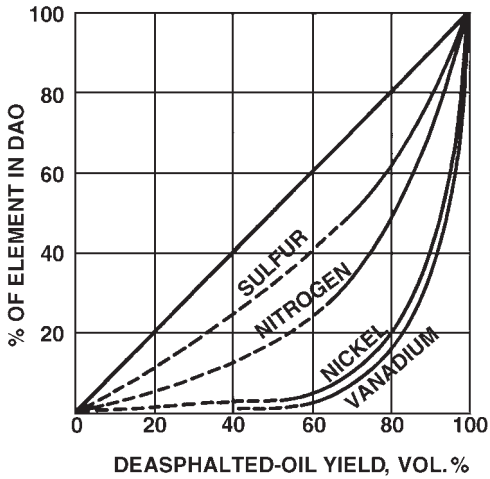

FIGURE 10.4.6 Selectivity in solvent deasphalting. [*Courtesy of the Gulf Publishing Company, publishers of* Hydrocarbon Processing, ***52****(5), 110–113 (1973).*]

Downloaded from Digital Engineering Library @ McGraw-Hill (www.digitalengineeringlibrary.com)
Copyright © 2004 The McGraw-Hill Companies. All rights reserved.
Any use is subject to the Terms of Use as given at the website.

UOP/FW USA SOLVENT DEASPHALTING PROCESS

During normal operation, when both the extraction pressure and solvent composition are fixed, SDA product yields and qualities are controlled by adjusting the extractor temperature. This adjustment is achieved by varying the temperature of the recycled solvent stream. Increasing the temperature of this stream reduces the solubility of the residue's heavier components and improves DAO quality at the expense of reduced DAO yield. Extraction temperature must be maintained below the critical temperature of the solvent, however, because at higher temperatures no portion of the residue is soluble in the solvent and no separation occurs.

Solvent Composition

Solvents typically used in the UOP/FWUSA SDA process include components such as propane, butanes and pentanes, and various mixtures of these components. Because these materials are generally readily available within a refinery, their use is relatively inexpensive. In addition, because the majority of the solvent is recirculated within the unit, solvent makeup rates are relatively small.

Increasing the solvent's molecular weight increases the yield of recovered DAO by allowing more of the heavier, more-resinous components of the feedstock to remain in the DAO. At the same time, however, the quality of the DAO decreases because these heavier materials have higher contaminant levels. Consequently, proper solvent selection involves balancing increased product yield and decreased product quality. Generally, light solvents, such as propane, are specified when the highest DAO quality is desired. However, light solvents typically produce low DAO yields. Intermediate solvents, such as butanes, are used when a reasonably high yield of high-quality DAO is desired. Finally, heavier solvents, such as pentanes, are used when the maximum yield of DAO is desired, for instance, when the DAO is to be hydrotreated before further processing.

Extraction Efficiency

The separation efficiency of the DAO and pitch products is significantly influenced by the amount of solvent that is mixed with the incoming feed to the SDA extractor. Increasing the amount of solvent improves the separation and produces a higher-quality DAO.

Figure 10.4.7 illustrates the impact of solvent rate on DAO quality. In this example, a DAO containing 40 wt ppm organometallics is recovered at a 3:1 solvent/oil (S:O) ratio for 50 vol % DAO yield. When the same feedstock is processed at a higher 5:1 S:O, the organometallic content of the DAO recovered at the same 50 vol % DAO yield is reduced to 30 wt ppm.

Unfortunately, because the quantity of solvent recirculated within the unit is significantly greater than the amount of feedstock being processed, the improved DAO quality achievable at higher solvent rates must be balanced against the additional operating costs associated with the higher solvent recirculation and solvent recovery requirements and the increased capital costs associated with the larger equipment sizes. In Fig. 10.4.7, the improvement in DAO quality must be balanced against the roughly 50 percent higher operating and capital costs associated with the higher solvent recirculation rate.

The addition of patented UOP/FWUSA SDA extractor internals, however, modifies the relationship between DAO yield and DAO quality by improving the extractor's separation efficiency. As shown in Fig. 10.4.7, the internals may be used to offset higher solvent recirculation rates by allowing either higher-quality DAO to be recovered at the same DAO yield or, conversely, more DAO to be recovered at the same DAO quality. Also, the additional operating and capital costs associated with higher solvent recirculation rates are eliminated when the intervals are employed.

Downloaded from Digital Engineering Library @ McGraw-Hill (www.digitalengineeringlibrary.com)
Copyright © 2004 The McGraw-Hill Companies. All rights reserved.
Any use is subject to the Terms of Use as given at the website.

UOP/FW USA SOLVENT DEASPHALTING PROCESS

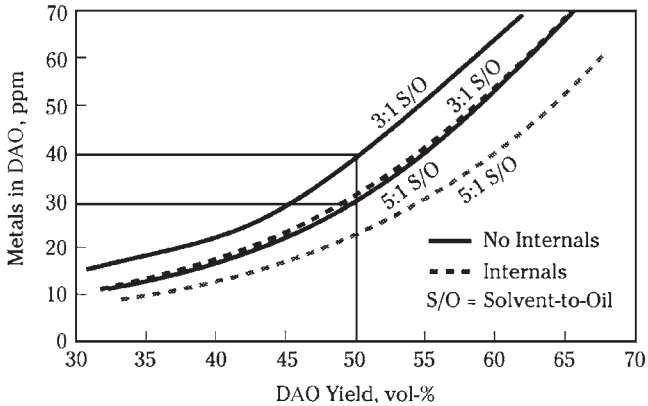

FIGURE 10.4.7 Effect of solvent rate and extractor internals.

EXTRACTION SYSTEMS

The efficiency of the SDA process is highly dependent on the performance of the liquid-liquid extraction device. Proper design of the extraction device is necessary to overcome the mass-transfer limitations inherent in processing heavy, viscous oils to ensure that the maximum yield of a specified quality of DAO is obtained. There are two major categories of extraction devices used for solvent deasphalting: mixer-settlers (a single stage or several stages in series) and countercurrent (multistage) vertical towers.

Mixer-Settler Extraction

Mixer-settlers were the first SDA devices used commercially, and this is the simplest continuous-extraction system.[10] It consists of a mixing device (usually an in-line static mixer or a valve) for intimately mixing the feedstock and the solvent before this mixture flows to a settling vessel. The settling vessel has sufficient residence time to allow the heavy pitch (raffinate) phase to settle by gravity from the lighter solvent-oil phase (extract). A single-stage mixer-settler results in, at best, one equilibrium extraction stage, and therefore the separation between the DAO and pitch is poorer than that obtainable with a countercurrent multistage extraction tower. This poorer separation is evidenced by the higher nickel and vanadium content of the DAO produced by the single-stage system compared to the multistage system. Table 10.4.8 gives data comparing the DAO obtained from Kuwait vacuum residue by using one equilibrium extraction stage versus that obtained from a countercurrent multistage extraction.[11] These data were obtained at a solvent/feed ratio of 6:1.

Single-stage mixer-settler extraction devices were gradually replaced by vertical countercurrent towers as the advantage of multistage countercurrent extraction became evident. The economic incentive for obtaining the maximum yield of high-quality DAO for lubricant production has resulted in the use of multistage countercurrent extraction towers in virtually all lubricating oil refineries.

Recently, some SDA designers have advocated a return to the mixer-settler extraction system for processing vacuum residues to obtain cracking feedstock, a considerably lower-value product than lubricating oil bright stock. This position is based on the theory that

Downloaded from Digital Engineering Library @ McGraw-Hill (www.digitalengineeringlibrary.com)
Copyright © 2004 The McGraw-Hill Companies. All rights reserved.
Any use is subject to the Terms of Use as given at the website.

UOP/FW USA SOLVENT DEASPHALTING PROCESS

TABLE 10.4.8 Solvent-Deasphalting Kuwait Vacuum Residue

	% of Feed (Ni + V) in DAO	
Pitch product, vol % on crude	Single-stage	Multistage countercurrent
8	22	8
10	17	4.5
12	13	2

Source: C. G. Hartnett, "Some Aspects of Heavy Oil Processing," API 37th Midyear Meeting, New York, May 1982.

the lower installed cost of the mixer-settler system offsets the product value loss due to the lower DAO yield. This is true only for low marginal values of the DAO cracking stock over the vacuum residue feedstock and for small yield losses. The latter assumption is true at very high (in general, greater than 90 vol %) DAO yields. With the heavier crudes being processed today, this is not always a realistic assumption.

Countercurrent Extraction

As shown in Table 10.4.8, countercurrent extraction provides a much more effective means of separation between the DAO and the asphalt than does single-stage mixer-settler extraction. This subsection will discuss the major factors affecting the design of a commercial countercurrent SDA extraction tower.

Countercurrent contact of feedstock and extraction solvent is provided in an extraction vessel called a *contactor* or *extractor* tower. Liquid solvent (light phase) enters the bottom of the extraction tower and flows upward as the continuous phase. The vacuum residue feedstock enters the upper section of the extraction tower and is dispersed by a series of fixed or rotating baffles into droplets which flow downward by gravity through the rising continuous solvent phase. As the droplets descend, oil from the droplets dissolves into the solvent, leaving insoluble asphalt or resin, saturated with solvent, in the droplets. These droplets collect and coalesce in the bottom of the tower and are continuously withdrawn as the asphalt phase (heavy phase, or raffinate).

As the continuous solvent phase, containing the dissolved DAO, reaches the top of the tower, it is heated, causing some of the heavier, more aromatic dissolved oil to separate from the solution. These heavier liquid droplets flow downward through the ascending continuous solvent-DAO solution and act as a reflux to improve the sharpness of the separation between the DAO and the asphalt. This type of extraction system is analogous to the conventional distillation process.

The most common extractor towers used commercially are the rotating-disk contractor (RDC) and the fixed-element, or slat, towers. RDCs have proved to be superior to slat towers because of the increased flexibility inherent in their operation as well as the improved DAO quality obtained by using the RDC.[12] A 3 to 5 percent DAO-yield advantage has been found for the RDC at constant DAO quality.[10,12]

More recently, structured packing has been used in place of slats or RDCs for extractor internals. Due to the high efficiency of structured packing, the extractor sizes have been reduced for the same feed rates.

Figure 10.4.8 shows a schematic of a rotating-disk contactor. The RDC consists of a vertical vessel divided into a series of compartments by annular baffles (stator rings) fixed

Downloaded from Digital Engineering Library @ McGraw-Hill (www.digitalengineeringlibrary.com)
Copyright © 2004 The McGraw-Hill Companies. All rights reserved.
Any use is subject to the Terms of Use as given at the website.

UOP/FW USA SOLVENT DEASPHALTING PROCESS

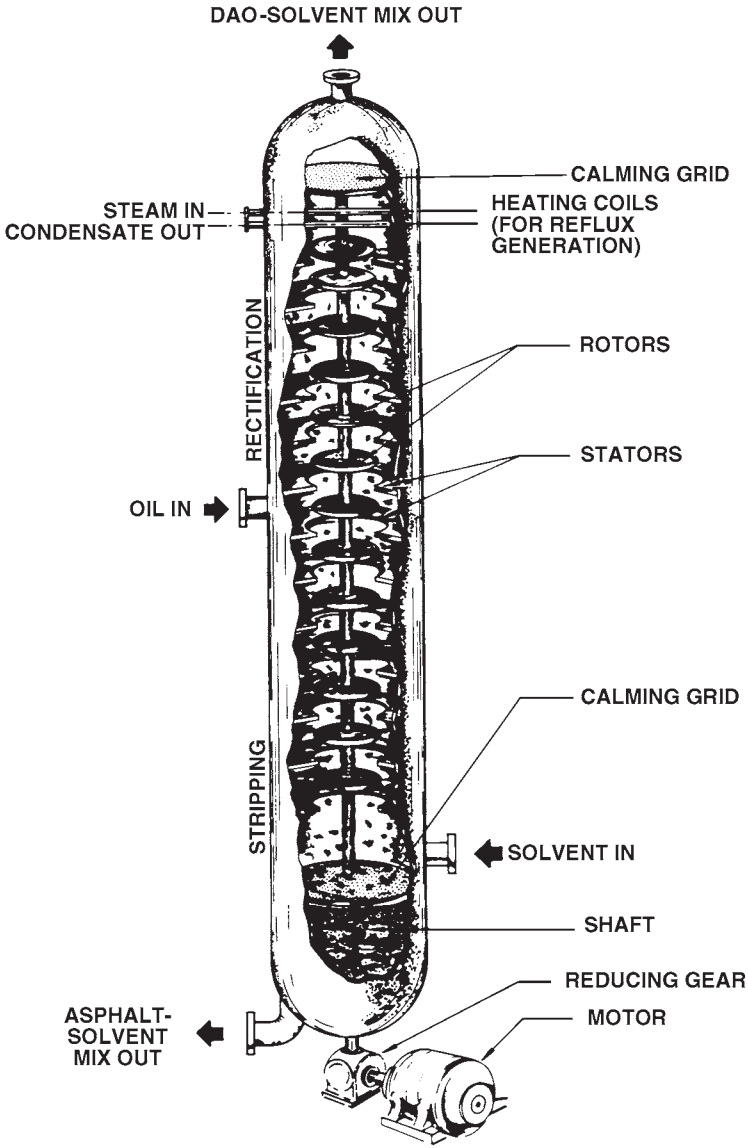

FIGURE 10.4.8 Rotating-disk contactor.

to the vessel shell. A rotating disk, supported by a rotating shaft, is centered in each compartment. The rotating shaft is driven by a variable-speed drive mechanism through either the top or the bottom head of the tower. Steam coils are provided in the upper section of the tower to generate an internal reflux. Calming grids are provided at the top and bottom sections of the tower. The number of compartments, compartment dimensions, location of

Downloaded from Digital Engineering Library @ McGraw-Hill (www.digitalengineeringlibrary.com)
Copyright © 2004 The McGraw-Hill Companies. All rights reserved.
Any use is subject to the Terms of Use as given at the website.

UOP/FW USA SOLVENT DEASPHALTING PROCESS

the feed nozzle, and rotor speed range are all selected to provide optimal performance for a given set of operations.

RDC Capacity

The conditions under which flooding occurs in an RDC or slat tower represent the capacity limit at which the contactor can be operated. Flooding is evidenced by a loss of the interface level between the solvent and the pitch phases in the bottom of the tower as well as by a deterioration in DAO quality. Usually this condition will appear quite suddenly, and if it is not properly corrected, pitch may be entrained into the DAO recovery system.

The maximum capacity of an RDC tower is a function of the energy input of the rotating disk. This energy input is given by the following equation.[12,13]

$$E = \frac{N^3R^5}{HD^2}$$

where D = tower diameter, ft
E = energy input factor, ft^2/s^3
H = compartment height, ft
N = rotor speed, r/s
R = rotor-disk diameter, ft

The tower capacity is given by the quantity

$$T = \frac{V_D + V_C}{C_R}$$

where V_C = superficial velocity of solvent (continuous phase), ft/h
V_D = superficial velocity of residue (dispersed phase), ft/h
C_R = factor, defined by RDC internal geometry[14]; it can be taken as the smaller value of O^2/D^2 or $(D^2 - R^2)/D^2$
O = diameter of opening in stator, ft
T = tower capacity, ft/h

For a fixed RDC internal geometry and for a given system (at constant solvent/feed ratio) the quantity $V_D + V_C$ at flooding (maximum tower capacity) is a smooth function of energy input quantity E. This function is illustrated by Fig. 10.4.9 for propane deasphalting in lubricating oil manufacture. This type of correlation permits the scaling up of pilot-plant data to a commercial-size unit or recalculation of the capacity of an existing tower for the same system at different conditions.

RDC Temperature Gradient

It is possible to improve the quality of the DAO product at a constant DAO yield by maintaining a temperature gradient across the extraction tower. A higher temperature at the top of the RDC as compared with the bottom generates an internal reflux because of the lower solubility of oil in the solvent at the top compared with the bottom. This internal reflux supplies part of the energy for mixing and increases the selectivity of the extraction process in a manner analogous to reflux in a distillation tower.

Downloaded from Digital Engineering Library @ McGraw-Hill (www.digitalengineeringlibrary.com)
Copyright © 2004 The McGraw-Hill Companies. All rights reserved.
Any use is subject to the Terms of Use as given at the website.

UOP/FW USA SOLVENT DEASPHALTING PROCESS

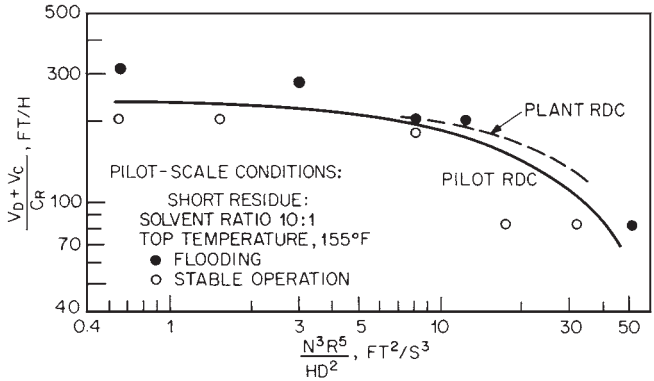

FIGURE 10.4.9 RDC capacity for propane deasphalting. [*Courtesy of Pennwell Publishing Company, publishers of the* Oil and Gas Journal, ***59,*** *90–94 (May 8, 1961).*]

Table 10.4.9 illustrates the effect of the RDC temperature gradient on the extraction process. Note that the RDC top temperature has been held constant and that the DAO yield is essentially unchanged.

RDC Rotor Speed

The RDC rotor speed has a significant effect on the yield and properties of the DAO and asphalt products. With all other variables held constant, an increase in rotor revolutions per minute within a certain speed range can result in an increased DAO yield. This yield increase is the direct result of higher mass-transfer rates when rotor speed is increased.

The effect of rotor speed on product yields and product properties is more evident at low throughputs and low rotor rates. At high throughputs much of the energy of mixing is obtained from the counterflowing phases themselves; in this case low rotor rates are sufficient to bring the extraction system up to optimal efficiency.

Table 10.4.10 illustrates the effect of rotor speed on a low-throughput operation. Note that the DAO yield is increased with little deterioration of DAO quality.

DAO PROCESSING

Because the most common application of the UOP/FWUSA SDA process involves recovering additional feedstock for catalytic processes such as FCC or hydrocracking, the amount of DAO recovered in the SDA unit can have a significant impact on the quantity and quality of the feedstock used in the conversion unit. Figures 10.4.10 and 10.4.11 summarize the Conradson carbon and organometallic contents of the VGO-DAO blends produced at various DAO recovery rates when processing the Arabian Light and Arabian Heavy feedstocks, respectively.

Figure 10.4.10 indicates that processing the Arabian Light feedstock at DAO recovery rates as high as 78 percent produces VGO-DAO blends with contaminant levels within typical FCC and hydrocracking feedstock specifications. Consequently, the inclusion of the

Downloaded from Digital Engineering Library @ McGraw-Hill (www.digitalengineeringlibrary.com)
Copyright © 2004 The McGraw-Hill Companies. All rights reserved.
Any use is subject to the Terms of Use as given at the website.

UOP/FW USA SOLVENT DEASPHALTING PROCESS

TABLE 10.4.9 Effect of RDC Temperature Gradient on DAO Quality

RDC temperature gradient, °C	DAO yield on feed, vol %	DAO properties		
		°API	Ni, wt ppm	V, wt ppm
14	83.0	22.3	0.75	0.55
23	83.3	23.4	0.50	0.40

Source: R. J. Thegze, R. J. Wall, K. E. Train, and R. B. Olney, *Oil Gas J.,* **59,** 90–94 (May 8, 1961).

TABLE 10.4.10 Effect of RDC Rotor Speed on Extraction Process

RDC rotor speed, r/min	DAO yield of feed, vol %	DAO properties			
		Viscosity, SSU at 100°C	Gravity, °API	CCR, wt %	Asphalt penetration, 0.1 mm at 25°C
20	76.8	194	23.2	1.4	38
35	80.3	198	23.0	1.5	8
50	83.3	203	22.3	1.5	1

Source: R. J. Thegze, R. J. Wall, K. E. Train, and R. B. Olney, *Oil Gas J., **59,*** 90–94 (May 8, 1961).

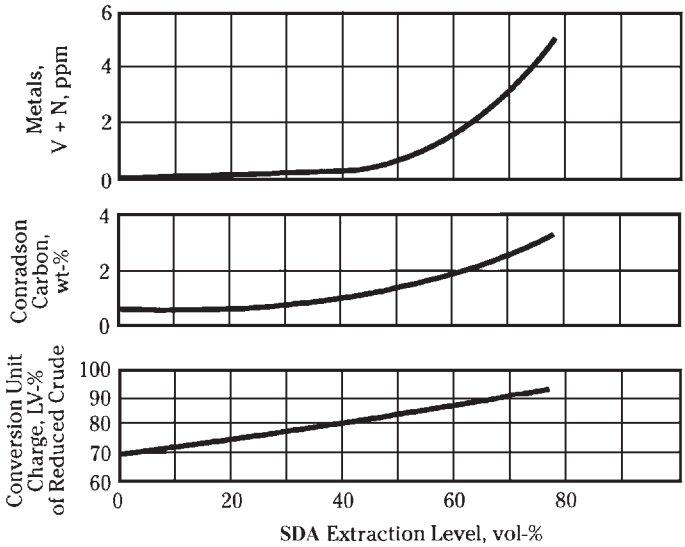

FIGURE 10.4.10 VGO-DAO blend quality (Arabian Light case).

Downloaded from Digital Engineering Library @ McGraw-Hill (www.digitalengineeringlibrary.com)
Copyright © 2004 The McGraw-Hill Companies. All rights reserved.
Any use is subject to the Terms of Use as given at the website.

UOP/FW USA SOLVENT DEASPHALTING PROCESS

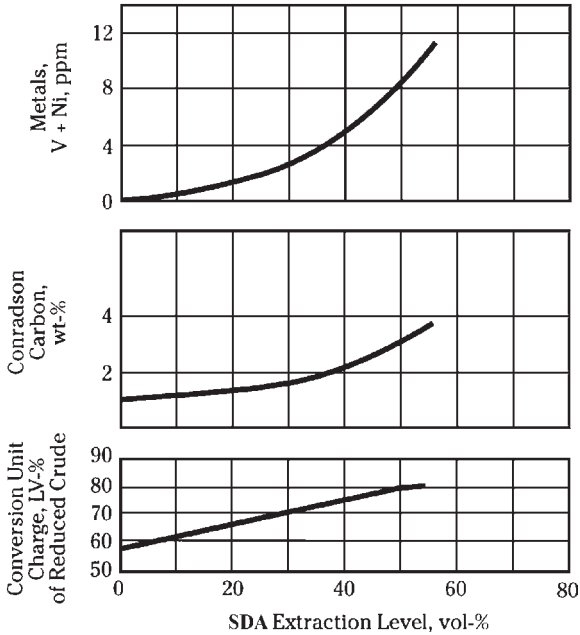

FIGURE 10.4.11 VGO-DAO blend quality (Arabian Heavy case).

UOP/FWUSA SDA unit increased the amount of feedstock used by the conversion unit by approximately 35 percent. Figure 10.4.11 indicates that a similar percentage increase in conversion unit feedstock is obtained from the Arabian Heavy feedstock when producing a comparable VGO-DAO quality. Because of the higher contaminant content of the Arabian Heavy crude, however, this VGO-DAO quality limit is reached at a lower DAO recovery rate. Thus, hydrotreating DAO recovered from highly contaminated crudes may be an economically feasible bottom-of-the-barrel processing strategy.

PITCH PROPERTIES AND USES

The pitch yield decreases with increasing DAO yield, and the properties of the pitch are affected as follows:[22]

- Specific gravity increases, corresponding to a heavier material.
- Softening point increases, and penetration decreases.
- Sulfur content increases.
- Nitrogen content increases.

Table 10.4.11 gives pilot-plant data which illustrate the trend of pitch properties with decreasing pitch yield.

Since SDA preferentially extracts light and paraffinic hydrocarbons,[3,23] the resulting asphalt is more aromatic than the original feed. Further, note that high-softening-point

Downloaded from Digital Engineering Library @ McGraw-Hill (www.digitalengineeringlibrary.com)
Copyright © 2004 The McGraw-Hill Companies. All rights reserved.
Any use is subject to the Terms of Use as given at the website.

UOP/FW USA SOLVENT DEASPHALTING PROCESS

TABLE 10.4.11 Solvent-Deasphalting Heavy Arabian Vacuum Residue Pitch Fraction

	Vacuum residue feed	Asphalt yields, vol %				
		84.9	52.6	44	34.7	26.2
Specific gravity, 60°F/60°F	1.0474	1.0679	1.1185	1.1290	1.1470	1.1690
Softening point (R&B), °C	62	79	128	139	164	
Penetration at 25°C, 0.1 mm	24	9	0	0	0	0
Sulfur, wt %	5.5	5.9	6.6	7.3	7.9	8.2
Nitrogen, wt %	0.46	0.53	0.65	0.73	0.79	0.97
Heptane, insoluble, wt %	14.1	71.8	26.8	—	45.1	80.2

Source: J. C. Dunmyer, "Flexibility for the Refining Industry," *Heat Eng.,* 53–59 (October–December 1977).

(greater than 105 to 120°C) asphaltenes are free of wax even when precipitated from very waxy residues.[24]

Except for SDA units specifically designed to produce roofing or paving asphalt, the asphalt product is normally considered a low-value by-product. Since there is a very limited commercial market for these by-product asphalts, the refiner must usually find some method of disposing of the asphalt by-product other than by direct sale.

The following are the main uses of the asphalt fraction.

Fuel

In some cases, pitch can be cut back with distillate materials to make No. 6 fuel oil. Catalytic cycle oils and clarified oils are excellent cutter stocks. When low-sulfur-content fuels are required and when the original deasphalter feedstock is higher in sulfur, direct blending of the asphalt to make No. 6 fuel oil generally is not possible.

Relatively low-softening-point pitch can be burned directly as refinery fuel, thereby avoiding the need to blend the pitch with higher-value cutter stocks.

Direct pitch burning has been practiced in a number of refineries. However, the high-sulfur-content crudes currently being processed by many refineries result in a high-sulfur-content pitch which cannot be burned directly as refinery fuel unless a stack-gas sulfur oxide removal process is used to meet U.S. environmental regulations.

It is possible to use solid (flaked or extruded) pitch as fuel for public utility power plants in conventional boilers with stack-gas cleanup or in modern fluidized-bed boilers.[25] These boilers use fluidized limestone beds directly to capture metals and sulfur oxides from the combustion gases.

Commercial Asphalts

Commercial penetration-grade asphalts can be produced by simply blending SDA pitch with suitable aromatic flux oils. In many cases, this can eliminate the need for air-oxidizing asphalts and thus present obvious economic and environmental advantages. When SDA pitch (which are wax-free) are blended with a nonparaffinic flux oil, asphalts having satisfactory ductility can be made even from waxy crudes.[3] This eliminates the need to buy special crudes for asphalt manufacture.

Downloaded from Digital Engineering Library @ McGraw-Hill (www.digitalengineeringlibrary.com)
Copyright © 2004 The McGraw-Hill Companies. All rights reserved.
Any use is subject to the Terms of Use as given at the website.

UOP/FW USA SOLVENT DEASPHALTING PROCESS

Partial Oxidation

Pitch can be used as a feedstock for synthesis-gas manufacture in partial-oxidation units. This synthesis gas can be used to produce hydrogen for the refinery hydroprocessing units, thereby eliminating the need to steam–reform more valuable distillate oils or natural gas to produce hydrogen.

INTEGRATION OF SDA IN MODERN REFINERIES

Selection of the optimum residue-upgrading route depends on many factors, such as

- Available feedstock characteristics
- Required flexibility for processing different feedstock
- Feedstock cost
- Product markets
- Product values
- Existing refinery configuration and possibility for process-unit integrations
- Operating costs
- Unit capital investment costs
- Unit stream factors

Typically, optimization studies use linear programming techniques. This optimization is performed during the initial refinery-expansion study phase to determine the most economical conversion route.

For the purpose of illustrating the integration of SDA units in bottom-of-the-barrel upgrading, a refinery processing 50,000 BPSD of Kuwait atmospheric residue was selected. The following processing routes are considered:

Base Refinery. (See Fig. 10.4.12.) The basic processing route uses a conventional vacuum-flasher scheme together with vacuum gas oil (VGO) hydrotreating (hydrodesulfurization, or HDS) followed by fluid catalytic cracking. This basic refinery scheme does not provide any vacuum residue upgrading. The block flow diagram given in Fig. 10.4.12 summarizes the expected product yields when processing 50,000 BPSD of Kuwait atmospheric residue. The products include 20,000 BPSD of heavy, high-sulfur vacuum residue. The main products are summarized in Table 10.4.12.

Maximum-Naphtha Case. (See Fig. 10.4.13.) This processing route is similar to the base refinery, but an SDA unit, which produces additional FCC unit feedstock from the vacuum residue, has been included. The major change is that instead of the base-case 20,000-BPSD vacuum residue production, 5400 BPSD of asphalt is produced. Table 10.4.12 summarizes the main products and shows that naphtha production has been increased by 49 percent with respect to the base case. For this illustration FCC was used for the VGO-DAO conversion, although hydrocracking also can be an economically viable route.

Maximum-Distillate Case. In this processing scheme the DAO together with the VGO is cracked in a hydrocracking unit. Figure 10.4.14 shows the flow scheme for this processing route, and Table 10.4.12 summarizes the main products. This table

Downloaded from Digital Engineering Library @ McGraw-Hill (www.digitalengineeringlibrary.com)
Copyright © 2004 The McGraw-Hill Companies. All rights reserved.
Any use is subject to the Terms of Use as given at the website.

UOP/FW USA SOLVENT DEASPHALTING PROCESS

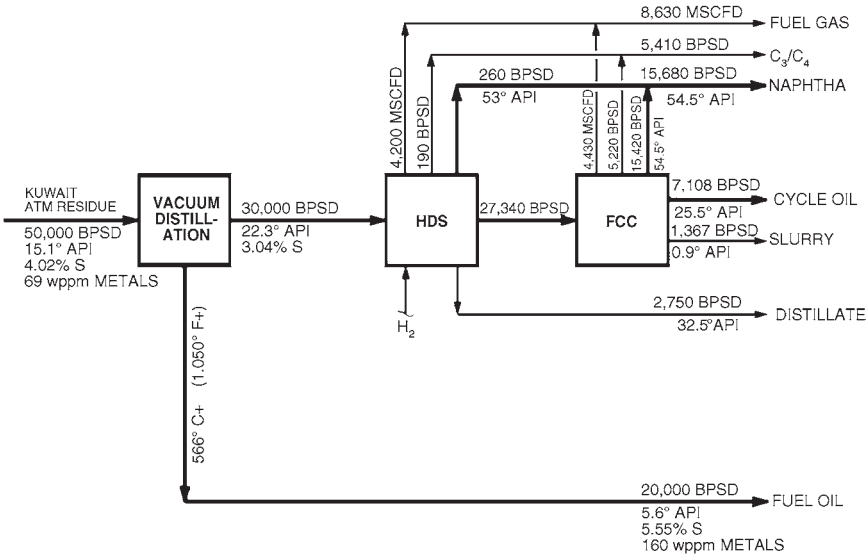

FIGURE 10.4.12 Integration of SDA in modern refineries: base refinery (no SDA unit provided).

TABLE 10.4.12 Integration of SDA in Refineries

		SDA unit application		
	Base refinery	Maximum naphtha	Maximum distillates	Maximum low-sulfur fuel oil
Products, BPSD:				
C_3-C_4 LPG	5,410	8,054	1,383	289
Naphtha	15,680	23,315	8,563	388
Distillates	9,858	14,659	40,407	4,090
Fuel oil	20,000*	—	—	46,051
Asphalt	—	5,400*	5,400*	
Fuel oil quality				
°API	5.6	—	—	19.4
wt % sulfur	5.55	—	—	1.55

*Outside No. 6 fuel-oil specifications.

shows that the naphtha yield was reduced by 50 percent and the distillate yields (jet fuel plus diesel) increased by 400 percent relative to the base case.

Maximum Low-Sulfur Fuel Oil. Maximum fuel oil production is not the general trend in the refinery industry but could be economically attractive under certain market conditions. This processing route is shown in Fig. 10.4.15. In this case the DAO together with the VGO is hydrotreated (HDS) and blended with the asphalt to produce a 1.55 percent sulfur fuel oil. This product corresponds to a 60 percent desulfurization of the atmospheric residue. Compared with direct desulfurization of the atmospheric residue, this route can be economically attractive in many cases.

Downloaded from Digital Engineering Library @ McGraw-Hill (www.digitalengineeringlibrary.com)
Copyright © 2004 The McGraw-Hill Companies. All rights reserved.
Any use is subject to the Terms of Use as given at the website.

UOP/FW USA SOLVENT DEASPHALTING PROCESS

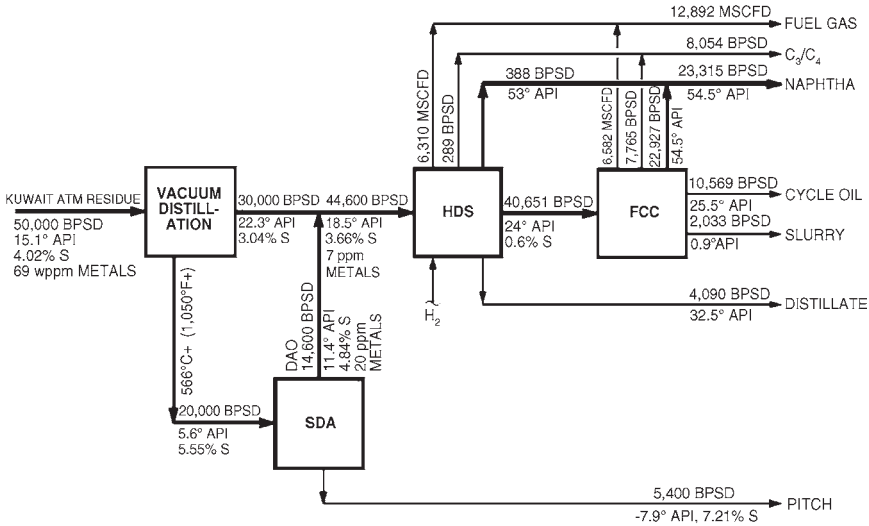

FIGURE 10.4.13 Integration of SDA in modern refineries: maximum naphtha case.

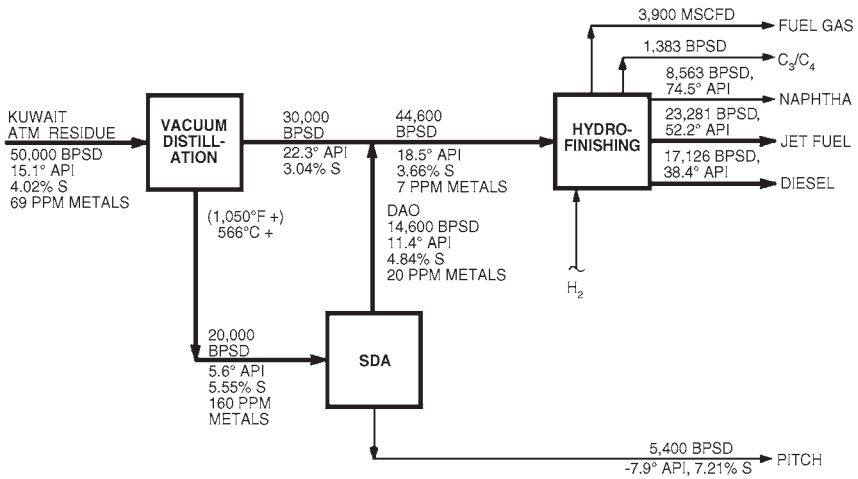

FIGURE 10.4.14 Integration of SDA in modern refineries: maximum distillate case.

Desulfurization of the DAO plus the VGO blend is a simpler, less expensive process than direct atmospheric-residue hydrotreating.

Lubricating Oil Production. For many years SDA has been used in the manufacture of lubricating oils. In this case SDA produces a short DAO cut, which is further treated (typically by furfural and then dewaxed) to produce high-quality lubricating oil

Downloaded from Digital Engineering Library @ McGraw-Hill (www.digitalengineeringlibrary.com)
Copyright © 2004 The McGraw-Hill Companies. All rights reserved.
Any use is subject to the Terms of Use as given at the website.

UOP/FW USA SOLVENT DEASPHALTING PROCESS

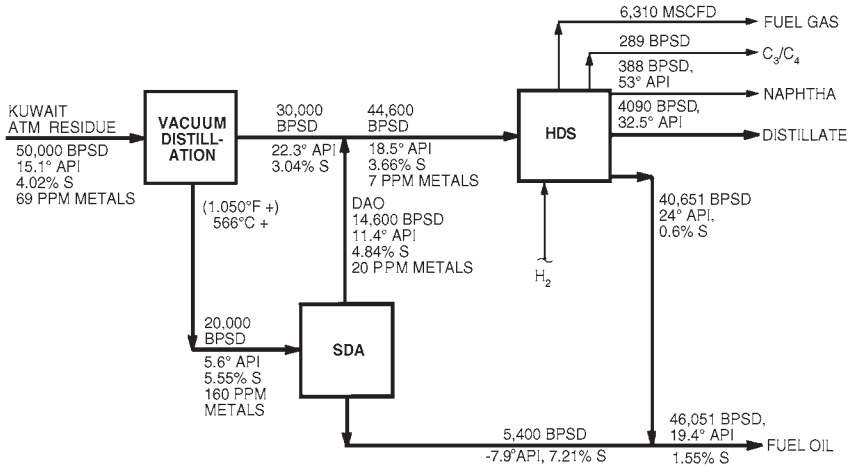

FIGURE 10.4.15 Integration of SDA in modern refineries: maximum low-sulfur fuel oil case.

base stocks. Older processing schemes would typically include solvent (Furfural or NMP) extraction followed by solvent dewaxing. More recent schemes would typically include hydrotreating followed by either solvent dewaxing or catalytic dewaxing, if a wax product is not required. (Fig. 10.4.16).

PROCESS ECONOMICS

The estimated battery-limits cost for a nominal 20,000 BPSD two-product UOP/FWUSA SDA unit constructed to UOP/FWUSA standards, second quarter of 2002, at a U.S. Gulf Coast location is approximately $24 million.

The UOP/FWUSA SDA process can have a wide range of utility consumptions depending on

- Solvent/oil ratio
- Solvent type
- Feed and product temperatures
- DAO yield
- Degree of heat recovery with the supercritical heat exchangers

However, for a typical application, based on supercritical solvent recovery and a 5:1 solvent/oil ratio, the utilities per barrel of feed are

Fuel, 56 MBtu

Power, 1.8 kWh

Medium-pressure steam, 11 lb

Collectively UOP and FWUSA have licensed and designed over 50 SDA units and have experience in every application of solvent deasphalting.

Symbols and abbreviations used in the chapter are listed in Table 10.4.13.

Downloaded from Digital Engineering Library @ McGraw-Hill (www.digitalengineeringlibrary.com)
Copyright © 2004 The McGraw-Hill Companies. All rights reserved.
Any use is subject to the Terms of Use as given at the website.

UOP/FW USA SOLVENT DEASPHALTING PROCESS

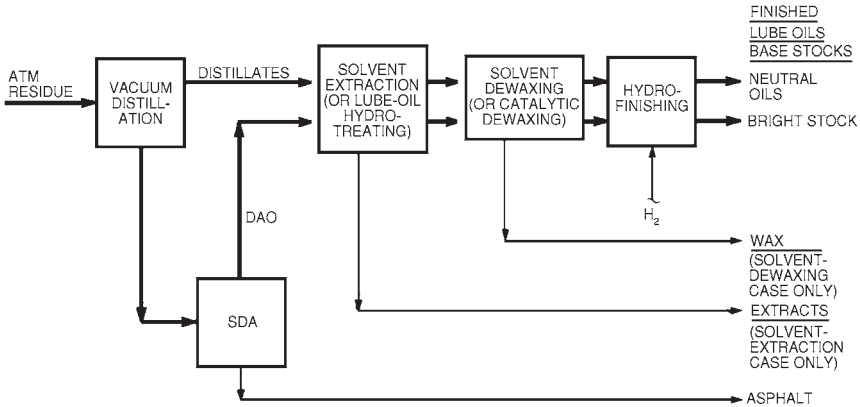

FIGURE 10.4.16 Integration of SDA in modern refineries: lubricating oil production case.

TABLE 10.4.13 Abbreviations

°API	Degrees on American Petroleum Institute scale: API = (141.5/sp gr) − 131.5	LP	Low pressure
		LPG	Liquefied petroleum gas
		MP	Medium pressure
bbl	Barrel (42 U.S. gal)	N	Rotor speed, r/s
BPSD	Barrels per stream-day	Ni	Nickel
CCR	Conradson carbon residue	O	Diameter of stator opening, ft
C_R	Factor defined by tower internal geometry	PVHE	Pressure vapor heat exchanger
		R	Rotor-disk diameter, ft
°C	Degrees Celsius	R&B	Ring and ball (softening point)
CWR	Cooling-water return	S	Sulfur
CWS	Cooling-water supply	SCFD	Standard cubic feet per day
DAO	Deasphalted oil	SDA	Solvent deasphalting
D	Tower diameter, ft	sp gr	Specific gravity at 60°F/60°F
D&E	Delivered and erected (cost)	SSU	Seconds Saybolt universal (viscosity)
E	Energy input factor, ft^2/s^3	TBP	True boiling point
°F	Degrees Fahrenheit	TC	Temperature controller
FC	Flow controller	V	Vanadium
FCC	Fluid catalytic cracker	V_C	Solvent superficial velocity, ft/h
H	Compartment height, ft	V_D	Residue superficial velocity, ft/h
HDS	Hydrodesulfurization		
HP	High pressure		
LC	Level controller		

REFERENCES

1. J. A. Bonilla, "Delayed Coking and Solvent Deasphalting: Options for Residue Upgrading," AIChE National Meeting, Anaheim, Calif., June 1982.
2. W. J. Rossi, B. S. Deighton, and A. J. MacDonald, *Hydrocarb. Process.*, **56**(5), 105–110 (1977).
3. J. G. Ditman and J. P. Van Hook, "Upgrading of Residual Oils by Solvent Deasphalting and Delayed Coking," ACS Meeting, Atlanta, April 1981.
4. P. T. Atteridg, Oil Gas J., **61**, 72–77 (Dec. 9, 1963).

Downloaded from Digital Engineering Library @ McGraw-Hill (www.digitalengineeringlibrary.com)
Copyright © 2004 The McGraw-Hill Companies. All rights reserved.
Any use is subject to the Terms of Use as given at the website.

UOP/FW USA SOLVENT DEASPHALTING PROCESS

5. J. G. Ditman and R. L. Godino, *Hydrocarb. Process.*, **44**(9), 175–178 (1965).
6. J. C. Dunmyer, R. L. Godino, and A. A. Kutler, "Propane Extraction: A Way to Handle Residue," *Heat Eng.* (November–December 1966).
7. R. L. Godino, "Propane Extraction," Heat Eng. (March–April 1963).
8. J. G. Ditman and F. T. Mertens, Pet. Process. (November 1952).
9. A. Rhoe, "Meeting the Refiner's Upgrading Needs," NPRA Annual Meeting, San Francisco, March 1983.
10. S. Marple, Jr., K. E. Train, and F. D. Foster, Chem. Eng. Prog., **57**(12), 44–48 (1961).
11. C. G. Hartnett, "Some Aspects of Heavy Oil Processing," API 37th Midyear Meeting, New York, May 1982.
12. R. J. Thegze, R. J. Wall, K. E. Train, and R. B. Olney, *Oil Gas J.*, **59**, 90–94 (May 8, 1961).
13. G. H. Reman and J. G. van de Vusse, *Pet. Refiner*, **34**(9), 129–134 (1955).
14. G. H. Reman, *Pet. Refiner*, **36**(9), 269–270 (1957).
15. J. W. Gleitsmann and J. S. Lambert, "Conserve Energy: Modernize Your Solvent Deasphalting Unit," Industrial Energy Conservation Technology Conference, Houston, April 1983.
16. J. G. Ditman, *Hydrocarb. Process.*, **52**(5), 110–113 (1973).
17. S. R. Sinkar, *Oil Gas J.*, **72**, 56–64 (Sept. 30, 1974).
18. J. G. Ditman, "Solvent Deasphalting—A Versatile Tool for the Preparation of Lube Hydrotreating Feed Stocks," API 38th Midyear Meeting, Philadelphia, May 17, 1973.
19. D. A. Viloria, J. H. Krasuk, O. Rodriguez, H. Buenafama, and J. Lubkowitz, *Hydrocarb. Process.*, **56**(3), 109–113 (1977).
20. J. C. Dunmyer, "Flexibility for the Refining Industry," *Heat Eng.*, 53–59 (October–December 1977).
21. E. E. Smith and C. E. Fleming, *Pet. Refiner*, **36**, 141–144 (1957).
22. H. N. Dunning and J. W. Moore, *Pet. Refiner*, **36**, 247–250 (1957).
23. J. G. Ditman and J. C. Dunmyer, *Pet. Refiner*, **39**, 187–192 (1960).
24. J. G. Ditman, "Solvent Deasphalting for the Production of Catalytic Cracking—Hydrocracking Feed & Asphalt," NPRA Annual Meeting, San Francisco, March 1971.
25. R. L. Nagy, R. G. Broeker, and R. L. Gamble, "Firing Delayed Coke in a Fluidized Bed Steam Generator," NPRA Annual Meeting, San Francisco, March 1983.

Downloaded from Digital Engineering Library @ McGraw-Hill (www.digitalengineeringlibrary.com)
Copyright © 2004 The McGraw-Hill Companies. All rights reserved.
Any use is subject to the Terms of Use as given at the website.

Downloaded from Digital Engineering Library @ McGraw-Hill (www.digitalengineeringlibrary.com)
Copyright © 2004 The McGraw-Hill Companies. All rights reserved.
Any use is subject to the Terms of Use as given at the website.

Source: HANDBOOK OF PETROLEUM REFINING PROCESSES

CHAPTER 10.5
UOP ISOSIV PROCESS

Nelson A. Cusher
UOP LLC
Des Plaines, Illinois

INTRODUCTION

Light straight-run (LSR) naphtha fractions made in the refinery are predominantly C_5's through C_7's, with traces of C_8's. They are highly paraffinic and contain moderate amounts of naphthenes, low aromatics, and no olefins. The average clear research octane number (RONC) is usually in the 60s.

The paraffinicity of light naphtha is what makes it a desirable petrochemical cracking stock. The aromatic rings are too thermally stable for cracking, and the naphthenes produce more liquid products. The straight-chain normal paraffins produce more ethylene and less pyrolysis gasoline than the branched-chain paraffins.

Figure 10.5.1 compares pyrolysis unit yields from a normal paraffin feed with yields from a mixed natural gasoline feed. The yields are based on a single-pass pyrolysis operation at equivalent high furnace severities for both feeds. The normal paraffin feed was extracted from a C_5 through C_9 natural gasoline stream. The natural gasoline feed contained 54.4 percent straight-chain paraffins and 45.6 percent branched and cyclic hydrocarbons. The ethylene yield is about 30 percent higher for the all-normals fractions. Propylene, butene, and light-gas yields decrease slightly. The pyrolysis gasoline yield is considerably reduced.

As the endpoint of naphtha is decreased, the paraffinicity of the stream increases; as a result, ethylene production increases and the production of pyrolysis gasoline and fuel oil decreases. The LSR naphtha—especially the 70°C (C_5–160°F) portion, which is about 95 percent paraffinic—is therefore a prime substitute for natural gas liquids as an ethylene plant feed. The nonnormal components of the LSR naphtha fraction have higher octanes than the normal paraffins (Table 10.5.1) and are excellent gasoline blending components.

UOP*'s IsoSiv* process uses molecular sieves to physically remove normal paraffins from the LSR feedstock. In the past, gasoline-range IsoSiv units were primarily used to produce specialty chemicals. The normal paraffin product having a 95 to 98 percent purity was cut into single-carbon-number fractions for special solvents. The normal-paraffin–free fraction was usually sent to the gasoline pool as an octane booster. The more recent IsoSiv units were built to produce high-octane gasoline components; the normal paraffin by-product was sold as petrochemical feedstock or sent to an isomerization reactor.

*Trademark and/or service mark of UOP.

Downloaded from Digital Engineering Library @ McGraw-Hill (www.digitalengineeringlibrary.com)
Copyright © 2004 The McGraw-Hill Companies. All rights reserved.
Any use is subject to the Terms of Use as given at the website.

UOP ISOSIV PROCESS

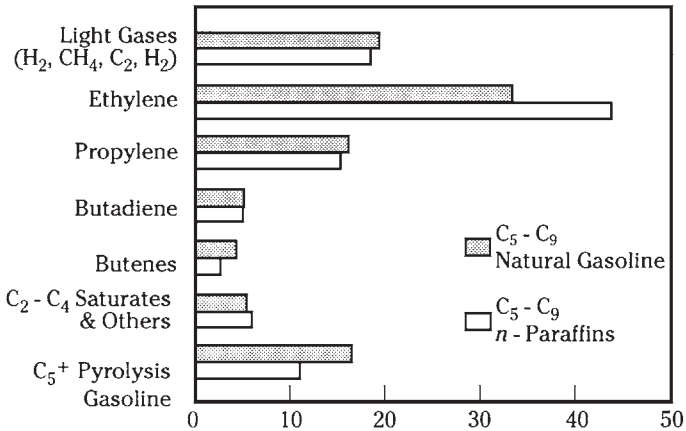

FIGURE 10.5.1 Pyrolysis yield data.

TABLE 10.5.1 Properties of Common Gasoline Components

Component	Molecular weight	Boiling point, °C (°F)	Density, kg/m^3 (lb/gal)	RONC
Isobutane	58.1	−11.7 (10.9)	562 (4.69)	100+
n-butane	58.1	−0.5 (31.1)	582 (4.86)	93.6
Neopentane	72.1	9.4 (49.0)	596 (4.97)	116
Isopentane	72.1	27.9 (82.2)	623 (5.20)	92.3
n-pentane	72.1	36.1 (96.9)	629 (5.25)	61.7
Cyclopentane	70.0	49.3 (120.7)	749 (6.25)	100
2,2-dimethlybutane	86.2	49.7 (121.5)	664 (5.54)	91.8
2,3-dimethylbutane	86.2	58.0 (136.4)	664 (5.54)	101.7
2-methylpentane	86.2	60.3 (140.5)	667 (5.57)	73.4
3-methylpentane	86.2	66.3 (145.9)	652 (5.44)	74.5
n-hexane	86.2	68.7 (155.7)	657 (5.48)	24.8
Methylcyclopentane	84.2	71.8 (161.3)	753 (6.28)	91.3
2,2-dimethylpentane	100.2	79.2 (174.6)	676 (5.64)	92.8
Benzene	78.1	80.1 (176.2)	882 (7.36)	100+
2,4-dimethylpentane	100.2	80.5 (176.9)	676 (5.64)	83.1
Cyclohexane	84.2	80.7 (177.3)	782 (6.53)	83
2,2,3-trimethylbutane	100.2	80.9 (177.6)	693 (5.78)	112
3,3-dimethylpentane	100.2	86.1 (186.9)	696 (5.81)	98
2,3-dimethylpentane	100.2	89.8 (193.6)	699 (5.83)	88.5
2,4-dimethylpentane	100.2	90.1 (194.1)	681 (5.68)	55
3-methylhexane	100.2	91.9 (197.5)	690 (5.76)	65
Toluene	92.1	110.6 (231.1)	870 (7.26)	100+
Ethylbenzene	106.2	136.2 (277.1)	870 (7.26)	100+
Cumene	120.2	152.4 (306.3)	864 (7.21)	100+
1-methyl-2-ethylbenzene	120.2	165.1 (329.2)	881 (7.35)	100+
n-decane	142.3	174.0 (345.2)	732 (6.11)	−53

Downloaded from Digital Engineering Library @ McGraw-Hill (www.digitalengineeringlibrary.com)
Copyright © 2004 The McGraw-Hill Companies. All rights reserved.
Any use is subject to the Terms of Use as given at the website.

UOP ISOSIV PROCESS

GENERAL PROCESS DESCRIPTION

The LSR naphtha fractions usually contain 40 to 50 percent normal paraffins. The IsoSiv process (Fig. 10.5.2) separates the normal paraffins from a hydrocarbon mixture by selective adsorption on a molecular sieve material. This material is a crystalline zeolite having uniform pore dimensions of the same order of magnitude as the size of individual hydrocarbon molecules. The molecular sieve used for normal paraffin separation has pore openings in the crystalline structure that are sized to allow molecules of normal paraffin to pass through the pore openings into the internal crystal cavity, where they are retained. Nonnormal hydrocarbons, such as isoparaffins, naphthenes, and aromatics, have larger molecular diameters and are, therefore, excluded from entering the crystal cavity through the pore opening.

The heart of the IsoSiv process is the adsorber section, which consists of vessels filled with molecular sieve adsorbent. The LSR feedstock is fed into one end of an adsorber vessel. The normal paraffins in the feedstock remain in the vessel by being adsorbed into the molecular sieve, and the remainder of the feedstock passes out the other end of the vessel as a nonnormal product. In a subsequent process step, the normal paraffins are recovered from the adsorber vessel as a separate product by use of a purge material. All process hardware in an IsoSiv unit is conventional refinery equipment, such as pumps, furnaces, heat exchangers, and compressors, that is designed to deliver the feedstock and the purge material to the adsorber section.

Typical performance (Table 10.5.2) results in an isomer product that is 98 to 99 percent free of normal paraffins and a normal paraffin product of 95 to 98 percent purity. The high-octane isomer product can have a RON approximately 15 numbers higher than the feed, depending on feed composition. The IsoSiv-grade molecular sieve adsorbent is fully regenerable and has an expected life of 10 to 15 years.

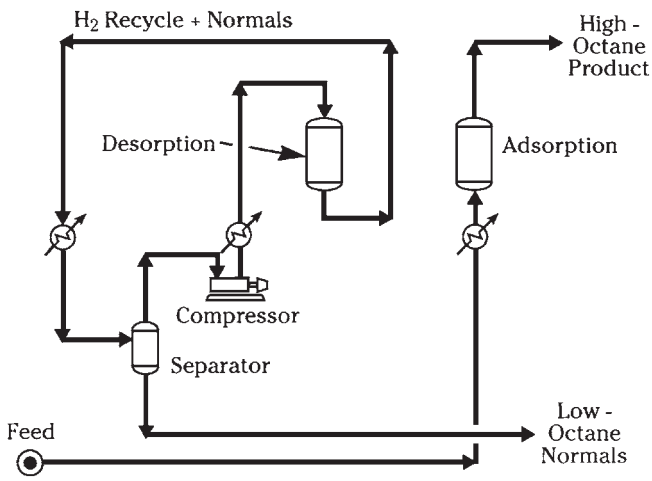

FIGURE 10.5.2 UOP IsoSiv process.

Downloaded from Digital Engineering Library @ McGraw-Hill (www.digitalengineeringlibrary.com)
Copyright © 2004 The McGraw-Hill Companies. All rights reserved.
Any use is subject to the Terms of Use as given at the website.

TABLE 10.5.2 Typical Performance

Isomer product purity	98–99%
Isomer research octane	~15 higher than feed RONC
Normal-paraffin product purity	95–98%
Adsorbent expected life	10–15 years

PROCESS PERSPECTIVE

The UOP IsoSiv process gained early acceptance and has maintained a leading position to the present day. The technology of normal paraffin separation by adsorption had its start in the late 1950s in the separation of normal paraffins from gasoline for octane improvement purposes. The first commercial application was an IsoSiv unit installed by the South Hampton Company of Silsbee, Texas. Today more than 45 IsoSiv units are operating as stand-alone units or as part of UOP's TIP* technology in the United States, Australia, Europe, Asia, and South America. These units range in size from 1000 to 35,000 barrels per stream day (BPSD) of feed capacity.

DETAILED PROCESS DESCRIPTION

The naphtha-range IsoSiv process makes use of the highly selective adsorption capability of a molecular sieve. The process is run at a constant, elevated temperature and pressure.

Vapor-phase operation is used to provide straightforward processing. Continuous processing is accomplished through cyclic operation that uses valves actuated by standard, fully automatic sequencing controls to switch adsorption beds. A steady flow of feed and products and constant product purity are maintained. All operating conditions are within the temperature and pressure ranges common to refinery and petrochemical operation. The basic IsoSiv cycle consists of an adsorption and a desorption step.

Adsorption

The feed stream is pumped through the heat exchanger, where it is heated by the nonnormal product, and then passes through a feed heater to an adsorption bed. It is then passed upward through one adsorber vessel, where the normal paraffins are selectively adsorbed in the bed. As the normal paraffins are adsorbed, the liberated heat of adsorption creates a temperature front that travels through the bed. This front closely coincides with the mass-transfer front and gives an indication of when the adsorption step should be terminated to prevent the normal paraffins from breaking through the effluent end of the bed. This temperature front is used in the field to set the cycle timer to prevent the front from reaching the bed exit. The unadsorbed isomers and cyclic hydrocarbons that pass through the beds are heat-exchanged against the feed stream to recover heat. This stream is then cooled and condensed, and the high-octane liquid is taken as product. The uncondensed vapors are reused as part of the nonadsorbable purge.

Desorption

After the adsorption step, the beds are countercurrently purged with a nonadsorbable medium. This countercurrent purging desorbs the normal paraffins and sweeps these desorbed

*Trademark and/or service mark of UOP.

Downloaded from Digital Engineering Library @ McGraw-Hill (www.digitalengineeringlibrary.com)
Copyright © 2004 The McGraw-Hill Companies. All rights reserved.
Any use is subject to the Terms of Use as given at the website.

UOP ISOSIV PROCESS

vapors from the bed, thus maintaining the average partial pressure of the desorbate below the value in equilibrium with the loading on the bed. The continuous removal of the desorbate vapor and the simultaneous transfer of the absorbed phase to the purge gas in an attempt to establish equilibrium drive the desorption stage to completion. A complete removal of the normal paraffin adsorbate is not achieved on each desorption. An economic balance between the bed size, as determined by the fraction of normal adsorbate removed (delta loading), and the purge required determines the degree of normals removed. This stream is then cooled and condensed, and the liquid is taken as normal product. The uncondensed vapors are reused as part of the purge medium.

The elevated temperatures used for vapor-phase adsorption can cause a gradual formation of coke on the beds. To remove any accumulation, a burn-off procedure is incorporated to reactivate the adsorbent at required times. This burn-off capability provides a built-in safeguard against permanent loss of bed capacity as a result of operating upsets. An in situ regeneration procedure is used to burn off the coke deposits and restore full adsorbent capacity.

PRODUCT AND BY-PRODUCT SPECIFICATIONS

The normal product purity is typically 95 to 98 percent. The purity of the isomer product is typically 98 to 99 percent. The high-octane isomer product can have a RON approximately 15 numbers higher than the feed, depending on feed composition.

WASTE AND EMISSIONS

No waste streams or emissions are created by the IsoSiv process. Isomer and normal products are usually stabilized, however. The result is a liquefied petroleum gas product (C_3 + C_4, rich in isobutane) and a stabilizer vent (H_2 + C_1 + C_2).

PROCESS ECONOMICS

Many factors influence the cost of separating isoparaffins and normal paraffins. These factors include feedstock composition, product purity, and the capacity and location of the unit. Location affects costs of labor, utilities, storage, and transportation. With this in mind, Table 10.5.3 presents investment and utility requirements.

In summary, commercially proven large-scale production technology is available today for the economic production of high-quality isoparaffins and normal paraffins.

Downloaded from Digital Engineering Library @ McGraw-Hill (www.digitalengineeringlibrary.com)
Copyright © 2004 The McGraw-Hill Companies. All rights reserved.
Any use is subject to the Terms of Use as given at the website.

UOP ISOSIV PROCESS

TABLE 10.5.3 UOP IsoSiv Process Economics and Performance*

Investment, $/BPSD of normal paraffins in feed:	
Erected capital cost	2100–2800
Adsorbent inventory	205
Utilities, per BPSD:	
Fuel consumed at 90% efficiency, million kcal/h (million Btu/h) per BPSD of total feed	0.0006 (0.0022)
Water at 17°C (31°F) rise, m3/day BPSD (gal/min) per BPSD of normal paraffins in feed	0.82 (0.15)
Power, kWh per BPSD of normal paraffins in feed	0.40
Hydrogen makeup at 70% H2 purity (solution loss), m3/day (SCF/h) per BPSD of total feed	0.75 (1.1)

*Basis: Battery-limits Gulf Coast location, 2001, excluding product stabilization. Normal-paraffin feed rates of 3000 to 8000 BPSD.

Note: SCF = standard cubic feet.

Downloaded from Digital Engineering Library @ McGraw-Hill (www.digitalengineeringlibrary.com)
Copyright © 2004 The McGraw-Hill Companies. All rights reserved.
Any use is subject to the Terms of Use as given at the website.

Source: HANDBOOK OF PETROLEUM REFINING PROCESSES

CHAPTER 10.6
KEROSENE ISOSIV PROCESS FOR PRODUCTION OF NORMAL PARAFFINS

Stephen W. Sohn
UOP LLC
Des Plaines, Illinois

The straight-chain normal paraffins in the kerosene range (C_{10} to C_{18}) have their principal uses in detergent manufacture, chlorinated fire retardants, plasticizers, alcohols, fatty acids, and synthetic proteins. The separation of these straight-chain normal paraffins from other classes of hydrocarbons, such as branched-chain isoparaffins, naphthenes, and aromatics, was a virtual impossibility prior to the advent of the synthetic zeolites known as *molecular sieves.* These uniform, molecular-pore-sized adsorbents, developed by Union Carbide in the early 1950s, opened the way for refiners and petrochemical producers to add adsorption as a means of separating hydrocarbon classes to those already known, such as distillation and liquid-liquid extraction. To date, eight kerosene IsoSiv systems have been started up (Table 10.6.1). The IsoSiv* process is licensed by UOP* subsequent to the joint venture ownership of UOP by Union Carbide and Allied Signal in 1988. Currently as a result of the merger of UCC with Dow, and Allied Signal with Honeywell, UOP is now owned jointly by Dow and Honeywell.

GENERAL PROCESS DESCRIPTION

The IsoSiv process separates normal paraffins from a hydrocarbon mixture, such as kerosene or gas oil, by selective adsorption on a molecular-sieve adsorbent material. This material is a crystalline zeolite having uniform pore dimensions of the same order of magnitude as the size of individual hydrocarbon molecules. The molecular sieve used for normal paraffin separation has openings in the crystalline structure that are sized to allow normal paraffin molecules to pass through the pore openings into the internal crystal cavity, where they are retained. Nonnormal hydrocarbons, such as isoparaffins, naphthenes, and aromatics, have larger molecular diameters and are therefore excluded from entering the crystal cavity through the pore opening.

*Trademark and/or service mark of UOP.

Downloaded from Digital Engineering Library @ McGraw-Hill (www.digitalengineeringlibrary.com)
Copyright © 2004 The McGraw-Hill Companies. All rights reserved.
Any use is subject to the Terms of Use as given at the website.

TABLE 10.6.1 Kerosene IsoSiv Commercial Applications

Unit	Feed type	Start-up	Location	Normal paraffin capacity, BPSD
1	Kerosene	1964	United States	2300
2	Kerosene	1971	West Germany	650
3	Kerosene-gas oil	1972	Italy	2600
4	Kerosene	1973	Italy	2600
5	Kerosene-gas oil	1974	Italy	5800
6	Kerosene-gas oil	1976	Italy	5800
7	Kerosene	1983	Brazil	2600
8	Kerosene	1992	People's Republic of China	950

Note: BPSD = barrels per stream-day.

The heart of the IsoSiv process is the adsorber section, consisting of vessels filled with molecular-sieve adsorbent. The kerosene or gas oil feedstock is fed into one end of an adsorber vessel, the normal paraffins in the feedstock remain in the vessel by being adsorbed in the molecular sieve, and the remainder of the feedstock passes out the other end of the vessel as a denormalized kerosene gas oil. The normal paraffins are recovered from the adsorber vessel as a separate product by using a purged material. All process hardware in an IsoSiv unit is conventional refinery equipment, such as pumps, furnaces, heat exchangers, and compressors, designed to deliver the feedstock and the purge material to the adsorber section and to remove the products from the adsorber section. The kerosene IsoSiv process typically recovers 95 wt % of the normal paraffins in the feedstock and produces a normal paraffin product of 98.5 wt % purity.

PROCESS PERSPECTIVE

During the early 1960s, the appeal of molecular-sieve adsorption led to widespread efforts at innovating new adsorption technology. Many of these efforts were successful, in that they resulted in molecular-sieve processes capable of separating long-chain normal paraffins from kerosene-range feedstocks at just the time when the detergent industry decided to switch to linear alkylbenzene sulfonates as a basis for its formulations of "soft" detergents. The consequent demand for long-chain normal paraffins led to a worldwide wave of construction: at least 12 adsorption plants were built to process kerosene-range feedstocks and use processes developed by Union Carbide, UOP, Esso, British Petroleum, Shell, and Texaco. Among the first units was the South Hampton Company's naphtha IsoSiv unit, which was converted to the kerosene range in 1961. In 1964 Union Carbide Corporation installed at its Texas City, Texas, petrochemical complex an IsoSiv unit producing 100,000 metric tons/year (MTA) (220,000 lb/yr) of normal paraffins from kerosene. This unit was to remain the world's largest normal paraffin-producing plant for almost 10 years.

At the beginning of the 1970s, a further extension of adsorption technology was required. The normal paraffins used as substrates for protein production extend into the gas oil feedstock range. Suitable modifications can and have been made to existing adsorption technology to allow successful application to the new requirements. In 1972, Liquichimica S.p.A., now Condea Augusta S.p.A. but then a subsidiary of the Liquigas Group of Italy, installed and started up in Augusta, Sicily, a modified IsoSiv unit to produce 110,000 MTA (242,000 lb/yr) of normal paraffins from both kerosene and gas oil feedstocks. Plant expansions put on-stream in 1973 brought normal paraffin production capacity at Augusta

Downloaded from Digital Engineering Library @ McGraw-Hill (www.digitalengineeringlibrary.com)
Copyright © 2004 The McGraw-Hill Companies. All rights reserved.
Any use is subject to the Terms of Use as given at the website.

KEROSENE ISOSIV PROCESS FOR PRODUCTION OF NORMAL PARAFFINS

up to approximately 250,000 MTA (551,000 lb/yr), making it by a wide margin the largest single normal paraffin-producing installation in the world. A second unit that came on-stream in December 1974 almost doubled previous capacity. A third IsoSiv unit of more than 200,000 MTA (440,000 lb/yr) came on-stream in 1976. Total installed capacity is more than 650,000 MTA (4,862,000 lb/yr) of normal paraffin production. These units have used feedstocks ranging from kerosene to gas oil and intermediate mixtures of both.

A seventh kerosene IsoSiv unit came on-line in Brazil in 1983. An eighth came on-line in China in 1992.

DETAILED PROCESS DESCRIPTION

The kerosene IsoSiv process employs the highly selective adsorption capability of molecular sieves. The simplified process flow scheme is shown in Fig. 10.6.1. The basic cycle consists of three steps: adsorption, copurge, and desorption. This section describes each in detail.

Adsorption Step

Hydrocarbon feed at elevated temperature and slightly above atmospheric pressure is passed upward through an adsorber vessel, where the normal paraffins are selectively adsorbed in the bed. In processing gas oil feedstock, hexane is added to the gas oil feed to dilute it and prevent capillary condensation from occurring on the adsorbent bed. As the normal paraffins are adsorbed, the liberated heat of adsorption creates a temperature front that travels through the bed. This front closely coincides with the mass-transfer front and gives an indication of when the adsorption step should be terminated to prevent the normal paraffins from breaking through the effluent end of the bed. The temperature front is

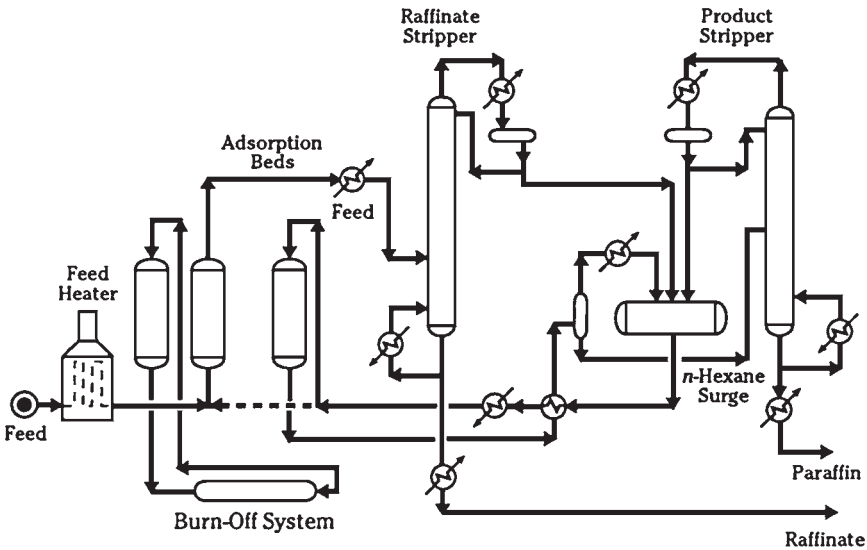

FIGURE 10.6.1 Kerosene IsoSiv process.

Downloaded from Digital Engineering Library @ McGraw-Hill (www.digitalengineeringlibrary.com)
Copyright © 2004 The McGraw-Hill Companies. All rights reserved.
Any use is subject to the Terms of Use as given at the website.

KEROSENE ISOSIV PROCESS FOR PRODUCTION OF NORMAL PARAFFINS

used in pilot-plant work to determine optimum design conditions and can be employed in commercial units to set the cycle timer to prevent the front from reaching the bed exit. The unadsorbed isomer and cyclic hydrocarbons and some purge hexane that pass through the beds combine with the copurge effluent and are heat-exchanged against the feed stream to recover heat. This stream is then sent to a distillation system, where the hexane purge material is recovered as a distillate product and the heavier isomers are taken as bottoms products.

Copurge Step

After the adsorption step, the normal paraffin-loaded beds are purged in the cocurrent direction with just enough vaporized hexane to displace the nonadsorbed feed and isomeric hydrocarbons from the void spaces in the adsorber vessel. This step is important especially in the production of protein substrates because it ensures that a high-purity product will be recovered from the desorption step. The effluent from the cocurrent purge step is combined with the adsorption effluent stream, as mentioned previously.

Desorption-Purge Step

After the copurge step, the beds are purged countercurrently with hexane. This countercurrent purging desorbs the normal paraffins and sweeps these desorbed vapors from the bed, thus maintaining the average desorbate partial pressure below the value in equilibrium with the loading on the bed. The continuous removal of the desorbate vapor and the simultaneous transfer of the adsorbed phase to the purge gas in an attempt to establish equilibrium drive the desorption toward completion. In addition to this stripping effect, the normal hexane itself becomes adsorbed on the bed and helps displace the heavier normal paraffin desorbate. A complete removal of the heavy normal paraffin adsorbate is not achieved on each desorption. An economic balance between the bed size, as determined by the fraction of heavy normal adsorbate removed (or *delta loading*), and the hexane purge required determines the degree of removal of the heavy normals obtained. As the purge quantity is decreased, the delta loading is decreased; and larger adsorbers are required for a given hydrocarbon feed throughput and cycle time. This decreased delta loading increases the rate of adsorbent deactivation and consequently the required burn-off frequency because the higher residual loading increases the rate of coke formation. Conversely, increasing the purge quantity increases delta loading until the hexane-handling equipment and operating costs become significant factors.

The desorption effluent containing heavy normal paraffins and hexane is partially condensed by heat exchange with the cold hexane purge. The vapor fraction and the condensate are transferred to the normal dehexanizer system, where the normal paraffins are separated from the hexane by standard fractionating techniques. The normal paraffin product from the bottom of the column is cooled and removed from the process. This separation is relatively easy because of the wide difference in boiling point between hexane and the lightest heavy normal paraffin. The recovered hexane from this column is also condensed and circulated back to the hexane accumulator without fractionation. Small additions of fresh hexane are required to make up losses of hexane carried out in both product streams.

The foregoing operation sequence is integrated into continuous processing by the cyclic use of several adsorber vessels. Automatic valves are operated by a sequencing control system. The flow of both feed and products is uninterrupted. Suitable interlocks and alarms are provided so that the plant can operate with a minimum of operator attendance.

Downloaded from Digital Engineering Library @ McGraw-Hill (www.digitalengineeringlibrary.com)
Copyright © 2004 The McGraw-Hill Companies. All rights reserved.
Any use is subject to the Terms of Use as given at the website.

KEROSENE ISOSIV PROCESS FOR PRODUCTION OF NORMAL PARAFFINS

Oxidative-Regeneration Description

As the adsorber beds are cycled at the elevated operating temperatures, a carbonaceous deposit gradually accumulates. This deposit reduces the capacity of the adsorbent, and this reduction ultimately results in a breakthrough of normal paraffins into the isomer product stream and decreased normal paraffin recovery. The rate at which this deposit accumulates depends on factors such as temperature, feed impurities, feed properties, cycle time, and residual paraffin loadings. This type of adsorbent deactivation is not permanent, and the original bed capacity can be restored by burning off this deposit under controlled conditions. For a kerosene-type feedstock, a bed can be cycled for 15 to 30 days before oxidative regeneration is necessary. For a gas oil feedstock, the period is reduced to about 6 to 10 days.

When a bed has been cycled to the point at which oxidative regeneration is required, it is removed from the processing operation, and another adsorber vessel is put into operation. This change is made without any interruption in the cycling sequence. The coked bed is removed from cycling after the desorption step and is given an additional long desorption purge to remove as much of the residual normal paraffins as possible. The bed is then completely isolated from the cycling system, and a downflow circulation of nitrogen is pumped by means of a compressor or blower and then passed through a heater to the adsorber vessel. The circulation of hot nitrogen has two purposes: to purge the hexane from the bed and to raise the temperature of the bed to above the coke ignition point prior to the introduction of oxygen into the system. The effluent gas from the bed is cooled to condense the hydrocarbons and water that desorb.

When the bed is up to temperature, air is introduced into the circulating stream at a controlled rate. The oxygen in the gas combusts with coke in the top of the bed. The heat released from combustion is carried out of the burning zone as a preheat front traveling ahead of the burning front. This preheat front raises the bed temperature even further. This temperature is controlled by regulating the amount of oxygen in the entering gas. Because excessive internal adsorbent temperatures permanently destroy the molecular-sieve crystal, the gas-phase temperature is critical. As the burning front passes through the bed, the temperature drops back to the gas inlet temperature. Because the coke deposit contains hydrogen, water is formed during combustion in addition to carbon oxides. This water must be removed from the system because the molecular-sieve crystal is permanently damaged by repeated exposure to water at high temperatures. To minimize this damage, a dryer is used to prevent the water from accumulating. The proper design of the regeneration process and the rugged nature of the molecular sieve ensure that the adsorbent has a long operating life.

After the regeneration is complete, the bed is cooled down to the process operating temperature and purged of any remaining oxygen by circulating nitrogen. The bed is now ready to go on-stream to replace one of the adsorbers in use so that it, in turn, can be reactivated.

WASTE AND EMISSIONS

During normal operation of the kerosene IsoSiv unit, the vent gas is not expected to contain more than 5000 vol ppm of total sulfur on the average. The maximum peak sulfur level in the vent gas stream is not expected to exceed 5 vol % when the unit is operating with feedstocks containing up to 500 wt ppm total sulfur. A second vent stream contains approximately 1000 vol ppm of sulfur during the burn-off of an adsorber bed. The peak concentration is not expected to exceed 5 percent. This vent will also contain approximately 2 vol % carbon monoxide.

Downloaded from Digital Engineering Library @ McGraw-Hill (www.digitalengineeringlibrary.com)
Copyright © 2004 The McGraw-Hill Companies. All rights reserved.
Any use is subject to the Terms of Use as given at the website.

Proper handling of these vent gas streams depends on many factors. One suggested method of handling these streams is to feed them to the hexane-heater firebox, provided acceptable stack sulfur levels can still be maintained.

ECONOMICS

Many factors affect the cost of extracting normal paraffins. They include the nature of the feedstock from which the normal paraffins are to be extracted, the specifications of the product normal paraffins, the production capacity or size of the plant, and the location. The last factor includes such items as climatic conditions and availability and cost of labor, utilities, storage, and transportation.

The feedstock is of primary importance. The normal paraffin content of gas oils ranges from 10 to 40 percent, depending on the crude oil source. The higher the normal paraffin content, the more amenable it is for normal paraffin processing. Refiners also find this feed the least attractive for fuel oil or diesel fuel because of its high pour or freeze points. Extracting the normal paraffins reduces the freeze point considerably, thus making the isomer product more salable. Impurities such as the amount of sulfur must also be considered.

Normal paraffin specifications as required by the selected fermentation process are also important. The hydrocarbon range, normal paraffin content, and types of impurities bear directly on whether prefractionation of the feedstock before normal paraffin extraction or postfractionation after extraction is required and on whether and to what degree some form of posttreatment is required to remove trace sulfur and aromatic compounds. The IsoSiv process produces normal paraffins at 98.5 wt % purity.

Plant size is important because large plants tend to be more economical. For normal paraffin extraction, plants producing less than 100,000 MTA (220,000 lb/yr) are considered to be relatively small from an economic point of view. However, plants with capacities larger than 500,000 MTA (1,102,000 lb/yr) offer little economic incentive. Location is also important.

All these economic considerations, plus an uncertain and rapidly changing economic climate, make estimates of capital investment and operating costs for extracting normal paraffins extremely tenuous. However, the estimated erected cost of a kerosene IsoSiv unit for the recovery of 100,000 MTA (220 million lb/yr) of normal paraffins is about $30 million.

In summary, commercially proven large-scale production technology is available for the economic production of high-quality normal paraffins in the kerosene range. The utility requirements for such a unit per metric ton of product are as follows:

Electric power, kWh	79.5
Hot oil heat, 10^3 J/h (Btu/h)	205 (195)
Cooling water circulated [15°C (27°F) rise], m^3 (gal)	8.3 (293)

BIBLIOGRAPHY

LaPlante, L. J., and M. F. Symoniak: "Here's One Way of Economically Producing Long-Chain Paraffins," NPRA Meeting, San Antonio, Tex., 1970.

Reber, R. A., and M. F. Symoniak: "IsoSiv: A Separation Process to Product *n*-Paraffins for Single Cell Protein," American Chemical Society meeting, Philadelphia, April 1975.

Downloaded from Digital Engineering Library @ McGraw-Hill (www.digitalengineeringlibrary.com)
Copyright © 2004 The McGraw-Hill Companies. All rights reserved.
Any use is subject to the Terms of Use as given at the website.

Source: HANDBOOK OF PETROLEUM REFINING PROCESSES

CHAPTER 10.7
UOP MOLEX PROCESS FOR PRODUCTION OF NORMAL PARAFFINS

Stephen W. Sohn
UOP LLC
Des Plaines, Illinois

DISCUSSION

The separation of normal paraffins from isoparaffins is done commercially for a number of reasons. In the lighter hydrocarbon range, isoparaffins are often more desirable because of their higher octane values and their superior gasoline alkylation characteristics. In the heavier range, normal paraffins are typically the desired product because of the benefits derived from their linearity in the production of plasticizers, linear alkylbenzene sulfonates, detergent alcohols, and ethoxylates.

This chapter discusses the specific application of the UOP* Molex* process to the separation of normal paraffins from isoparaffins. Although not limited in its application to a particular processing mode or carbon number, the Molex process is most often used in the recovery of normal paraffins for plasticizer and detergent-range applications. Typical carbon numbers are C_6 to C_{10} for plasticizers, C_{10} to C_{14} for linear alkylbenzenes, and C_{10} to $C_{18}+$ for detergent alcohols.

The UOP Molex process is an established, commercially proven method for the liquid-phase adsorptive separation of normal paraffins from isoparaffins and cycloparaffins using the UOP Sorbex* separations technology (see Chap. 10.3), which uses zeolitic adsorbents. Isothermal liquid-phase operation facilitates the processing of heavy and broad-range feedstocks. Vapor-phase operations, in addition to having considerable heating and cooling requirements, require large variations of temperature or pressure or both through the adsorption-desorption cycle to make an effective separation. Vapor-phase operations also tend to leave a certain residual level of coke on the adsorbent, which must then be regenerated on a cyclic basis. Operation in the liquid phase allows for uninterrupted continuous operation over many years without regenerations.

Refer to Chap. 10.3 for details of the operation of this separations technology. Figure 10.7.1 illustrates the general design characteristics of such units.

*Trademark and/or service mark of UOP.

Downloaded from Digital Engineering Library @ McGraw-Hill (www.digitalengineeringlibrary.com)
Copyright © 2004 The McGraw-Hill Companies. All rights reserved.
Any use is subject to the Terms of Use as given at the website.

UOP MOLEX PROCESS FOR PRODUCTION OF NORMAL PARAFFINS

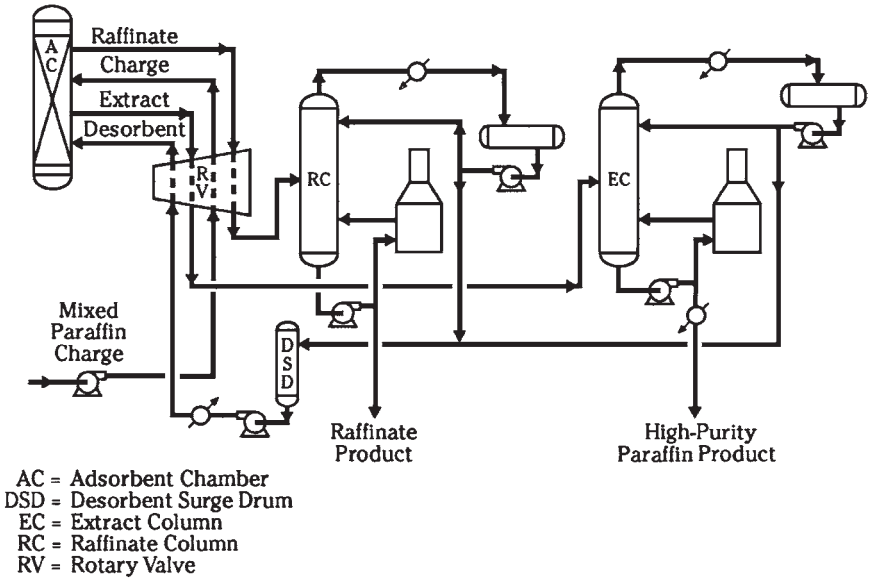

FIGURE 10.7.1 UOP Molex process design characteristics.

YIELD STRUCTURE

Typically, a UOP Molex process unit produces normal paraffins at about 99 wt % purity and at about 98 wt % recovery, depending on the amount of adsorbent used relative to the volume of feed.

ECONOMICS

To a certain extent, the economics of the UOP Molex unit is dependent on the feed quality, because some prefractionation and hydrotreating may be required to control the level of contaminants that might otherwise affect unit performance or adsorbent life. If the feed is assumed to have been properly treated, the estimated erected cost of a UOP Molex unit, feeding 383,000 metric tons per year (MTA) (844 million lb/year) of a paraffinic kerosene in the C_{10} to C_{15} range with about 34 percent normal paraffins, was about $25 million in 1995. This unit was designed for the recovery of 96,000 MTA (211 million lb/year) of normal paraffins at 99 percent purity. This cost represents the fully erected cost within battery limits for a particular UOP Molex unit.

The utility requirements for such a unit per metric ton of product are as follows:

Electric power, kWh	54.3
Hot-oil heat, 10^3J/h (Btu/h)	120 (114)
Cooling water circulated [15°C (27°F]) rise], m^3 (gal)	5.1 (180)

Downloaded from Digital Engineering Library @ McGraw-Hill (www.digitalengineeringlibrary.com)
Copyright © 2004 The McGraw-Hill Companies. All rights reserved.
Any use is subject to the Terms of Use as given at the website.

UOP MOLEX PROCESS FOR PRODUCTION OF NORMAL PARAFFINS

COMMERCIAL EXPERIENCE

As of early 2002, a total of 26 UOP Molex process units had been commissioned. Another three were in various stages of design or construction. Product capacities ranged from 2500 MTA (5.5 million lb/year) to 155,000 MTA (340 million lb/year).

Downloaded from Digital Engineering Library @ McGraw-Hill (www.digitalengineeringlibrary.com)
Copyright © 2004 The McGraw-Hill Companies. All rights reserved.
Any use is subject to the Terms of Use as given at the website.

Downloaded from Digital Engineering Library @ McGraw-Hill (www.digitalengineeringlibrary.com)
Copyright © 2004 The McGraw-Hill Companies. All rights reserved.
Any use is subject to the Terms of Use as given at the website.

Source: HANDBOOK OF PETROLEUM REFINING PROCESSES

CHAPTER 10.8
UOP OLEX PROCESS FOR OLEFIN RECOVERY

Stephen W. Sohn
UOP LLC
Des Plaines, Illinois

DISCUSSION

The recovery of olefins from mixtures of olefins and paraffins is desirable in a number of areas: recovery of propylene from propane-propylene streams, recovery of C_4 olefins, and especially recovery of heavier olefins for the manufacture of oxoalcohols for plasticizer and detergent applications.

The UOP Olex* process, a method of separating olefins from paraffins, is another of the many applications of the UOP Sorbex* separations technologies (see Chap. 10.3). This technique involves the selective adsorption of a desired component from a liquid-phase mixture by continuous contacting with a fixed bed of adsorbent. Other commercial methods of separation include extraction and extractive distillation. These methods, however, are less efficient in terms of product recovery and purity, much more energy-intensive, limited in application to lighter molecular weights, and limited as to the range of carbon numbers and of the molecular weights over which they apply.

In contrast, adsorbents have been developed that demonstrate the desirable characteristic of preferential relative adsorptivity for olefins as compared with paraffins. This characteristic permits ready separation of olefins and paraffins even with feedstocks that have a wide boiling range.

Much higher mass-transfer efficiency can be achieved in adsorptive operations than with the conventional equipment used for extraction and extractive distillation. As an example, laboratory-scale chromatographic columns commonly show separative efficiencies equivalent to many thousands of theoretical trays in columns of modest length. This high efficiency results from the use of small particles to give high interfacial areas and form the absence of significant axial mixing of either phase.

In contrast, trayed fractionating columns and liquid-liquid extractors are designed to provide practically complete axial mixing in each physical element to create interfacial areas for mass transfer. The number of theoretical equilibrium stages is thus limited substantially to the number of physical mixing stages installed. This limitation could be avoided, in theory, by the use of packaged columns. However, if the packing-particle size is

*Trademark and/or service mark of UOP.

Downloaded from Digital Engineering Library @ McGraw-Hill (www.digitalengineeringlibrary.com)
Copyright © 2004 The McGraw-Hill Companies. All rights reserved.
Any use is subject to the Terms of Use as given at the website.

UOP OLEX PROCESS FOR OLEFIN RECOVERY

small enough to provide interfacial areas comparable with those obtained in adsorptive beds, the capacity to accommodate the counterflow of two fluid phases becomes low. Thus, great difficulty is encountered in obtaining uniform unchanneled flow of both fluid phases. In an adsorptive bed, these limitations are much less severe because only one fluid phase is involved.

In the past, processes employing solid adsorbents for treatment of liquids have not gained wide acceptance except where the quantity of material to be removed was small and frequent regeneration of the adsorbent was therefore not required. One reason for this slow acceptance was the absence of a design that would permit continuous operation. In the usual fixed-bed adsorptive process, the feed stream is discontinuous, and the product streams vary in composition. Thus, integrating the operation of any intermittent process with continuous processes operating upstream and downstream from it is difficult.

The unique process configuration used in Sorbex units eliminates these problems and facilitates continuous adsorptive separation. The Sorbex flow scheme simulates the continuous countercurrent flow of adsorbent and liquid without actual movement of the adsorbent. This system design makes adsorptive separation a continuous process and eliminates the inherent problems of moving-bed operation.

Essentially, the UOP Olex process is based on the selective adsorptive separation of olefins from paraffins in a liquid-phase operation. The adsorbed olefins are recovered from the adsorbent by displacement with a desorbent liquid of a different boiling point.

The flow diagram for the Olex process is shown in Fig. 10.8.1. See Chap. 10.3 for a more detailed description of Sorbex separations technologies.

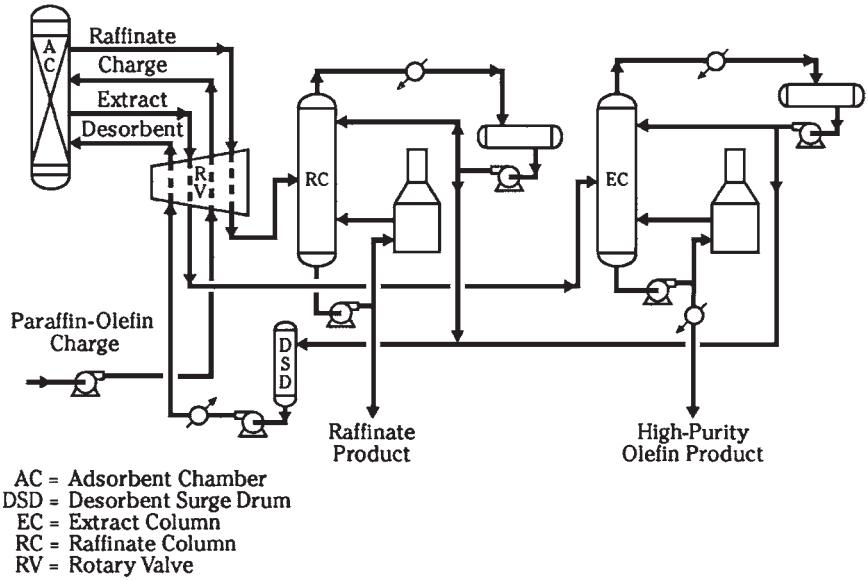

FIGURE 10.8.1 UOP Olex process.

Downloaded from Digital Engineering Library @ McGraw-Hill (www.digitalengineeringlibrary.com)
Copyright © 2004 The McGraw-Hill Companies. All rights reserved.
Any use is subject to the Terms of Use as given at the website.

UOP OLEX PROCESS FOR OLEFIN RECOVERY

COMMERCIAL EXPERIENCE

Six UOP Olex process units have been commissioned since the first one came on stream in 1972. Five commercial units process heavy ($C_{10–13}$ up to $C_{15–18}$) olefin feeds and one unit processes a light (C_4) olefin feed. The heavy-feed olefin content ranges from 10 to 13 wt %, and the light feed is approximately 80 wt % olefins.

ECONOMICS

The estimated erected cost of a UOP Olex unit for the production of 52,000 metric tons/year (115 million lb/yr) of olefins in the C_{11} to C_{14} carbon range from a feed stream containing 10 wt % olefins was about $25 million. This amount was the fully erected cost within battery limits of a unit.

The utility requirements for such a unit per metric ton of product would be approximately as follows:

Electric Power, kWh	110
Hot-oil heat, (10^3) J/h (Btu/h)	266 (253)
Cooling water circulated [15°C (27°F) rise], m^3 (gal)	10.5 (371)

Downloaded from Digital Engineering Library @ McGraw-Hill (www.digitalengineeringlibrary.com)
Copyright © 2004 The McGraw-Hill Companies. All rights reserved.
Any use is subject to the Terms of Use as given at the website.

Downloaded from Digital Engineering Library @ McGraw-Hill (www.digitalengineeringlibrary.com)
Copyright © 2004 The McGraw-Hill Companies. All rights reserved.
Any use is subject to the Terms of Use as given at the website.

Source: HANDBOOK OF PETROLEUM REFINING PROCESSES

P · A · R · T · 11

SULFUR COMPOUND EXTRACTION AND SWEETENING

Downloaded from Digital Engineering Library @ McGraw-Hill (www.digitalengineeringlibrary.com)
Copyright © 2004 The McGraw-Hill Companies. All rights reserved.
Any use is subject to the Terms of Use as given at the website.

Downloaded from Digital Engineering Library @ McGraw-Hill (www.digitalengineeringlibrary.com)
Copyright © 2004 The McGraw-Hill Companies. All rights reserved.
Any use is subject to the Terms of Use as given at the website.

Source: HANDBOOK OF PETROLEUM REFINING PROCESSES

CHAPTER 11.1
KBR REFINERY SULFUR MANAGEMENT

Michael Quinlan
Kellogg Brown & Root, Inc.

INTRODUCTION

Raw crude oil contains sulfur and nitrogen. During processing, the sulfur and nitrogen are converted principally to H_2S and NH_3 and, to a lesser degree, organic sulfur (COS and CS_2) and mercaptans (RSH).

More stringent environmental standards on the emissions of sulfur and nitrogen compounds, together with the low sulfur specifications for petroleum products, have resulted in making sulfur management critical within today's refinery. The importance of sulfur management cannot be overstressed. Today's refineries are processing crudes with higher sulfur contents and are doing more bottom-of-the-barrel conversion. The need for new or revamped sulfur management facilities is expected to grow as demands for cleaner fuels and environment increase and crude oil slates change.

As illustrated in Fig. 11.1.1, sulfur management within a refinery consists of four basic processes. Amine treating units (ATUs) remove H_2S from recycle gas streams in hydroprocessing operations and from fuel gas/liquefied petroleum gas (LPG) recovery units. The amine is regenerated in one or more amine regeneration units (ARUs). Sour water strippers (SWSs) remove H_2S and NH_3 from the sour water streams. Sour water is the result of refinery operations using steam in distillation or steam as a means to reduce hydrocarbon partial pressure or where water injection is used to combat potential corrosion or salt buildup. The sulfur in the acid gas from the ARU and the SWS is removed first by a Claus sulfur recovery unit (SRU) that achieves 92 to 96 percent of the overall sulfur recovery and

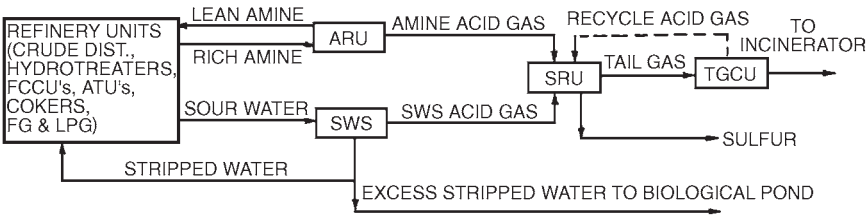

FIGURE 11.1.1 Sulfur removal/recovery.

Downloaded from Digital Engineering Library @ McGraw-Hill (www.digitalengineeringlibrary.com)
Copyright © 2004 The McGraw-Hill Companies. All rights reserved.
Any use is subject to the Terms of Use as given at the website.

KBR REFINERY SULFUR MANAGEMENT

then by a tail gas cleanup unit (TGCU) that can boost overall sulfur recovery to 99.9 percent. Most refineries now degas the molten sulfur produced. The amine, SWS, SRU, and TGCU processes are discussed in the following chapters.

AMINE

Introduction

The sulfur in crude oil that is converted to H_2S during processing typically is removed by a suitable amine. Two broad classifications of refinery amine treating applications are recycle gas treating and fuel gas/LPG recovery. In recycle gas treating, shown schematically in Fig. 11.1.2, the product oil from a hydroprocessing unit has an upper specification limit on its sulfur content. The sulfur in the feed oil reacts with H_2 at elevated pressure (typically 35 to 150 bar gage) to form H_2S. The reactor product stream is flashed, and a recycle gas stream, containing H_2, H_2S, and some hydrocarbons, is sent to an amine absorber, where the H_2S is removed by the circulating amine stream.

In fuel gas and LPG recovery units, the off-gases and stabilizer overheads from cracking, coking, and reforming units are sent to gas recovery units. The sour fuel gas has H_2S removed at low pressure (3.5 to 14 bar gage typically) by the circulating amine. The LPG stream has the bulk H_2S removed by amine at 14 to 21 bar gage, then the remaining H_2S plus mercaptans is treated by a caustic solution and a proprietary solvent wash that converts the mercaptans to mercapticides. These washes typically achieve a Copper Strip 1A specification. Figure 11.1.3 shows a typical block flow design illustrating the processing steps.

Process Description

Many refineries have multiple amine absorbers served by a common amine regeneration unit. Other refineries have two separate amine regeneration systems, with one system typically dedicated to "clean" users (such as hydrotreaters) and the other dedicated to "dirty" users (such as FCC units or cokers). A dual amine regeneration system is illustrated in Fig. 11.1.4. Figure 11.1.5 shows the rich amine streams from the absorbers being combined and sent to the rich amine flash drum to flash off light hydro-

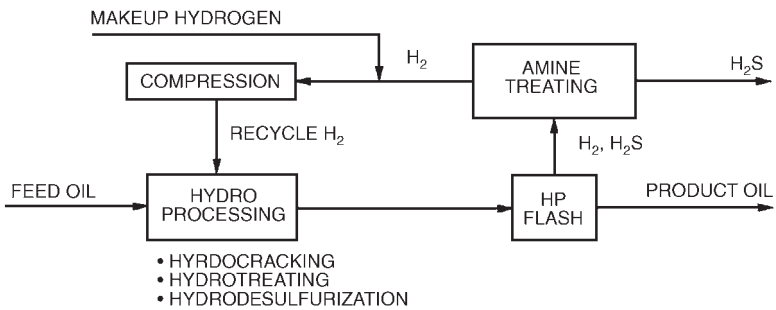

FIGURE 11.1.2 Recycle gas amine treating.

Downloaded from Digital Engineering Library @ McGraw-Hill (www.digitalengineeringlibrary.com)
Copyright © 2004 The McGraw-Hill Companies. All rights reserved.
Any use is subject to the Terms of Use as given at the website.

KBR REFINERY SULFUR MANAGEMENT

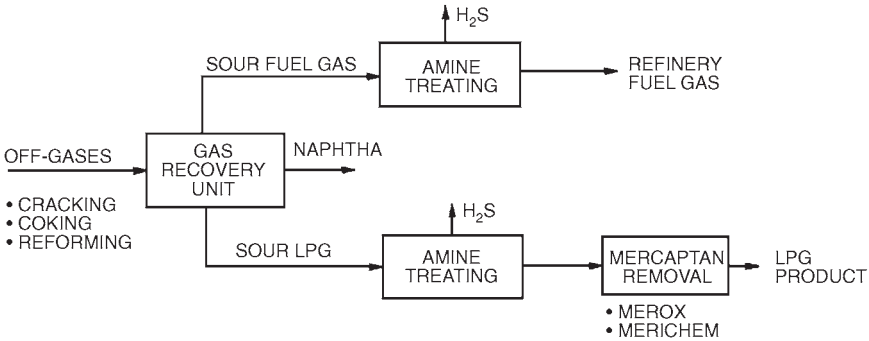

FIGURE 11.1.3 Fuel gas/LPG amine treating.

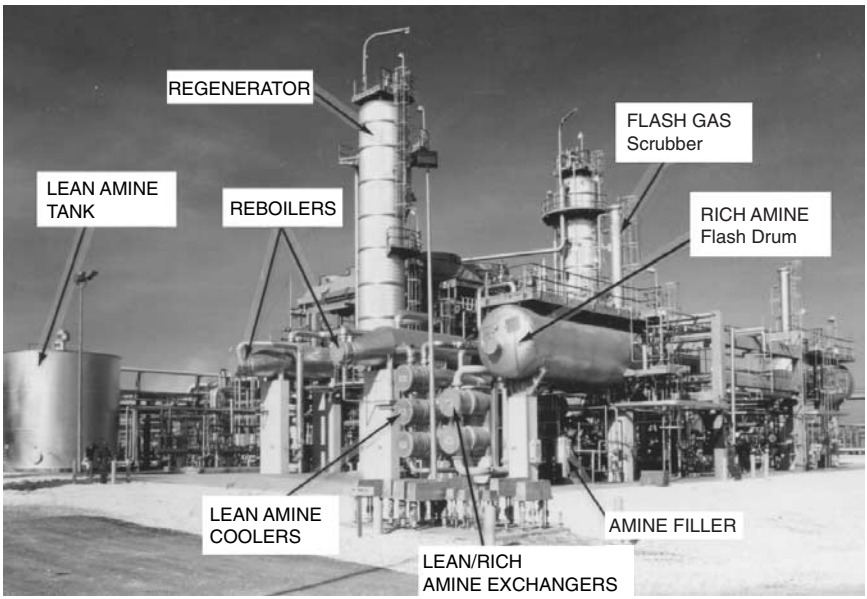

FIGURE 11.1.4 Amine regeneration unit.

carbons and to separate entrained hydrocarbons from the amine. This is necessary to minimize hydrocarbon carryover to the Claus SRUs. The flashed gas is treated with a slipstream of lean amine in the flash gas scrubber prior to routing to the fuel gas system. The flash drum is most often operated at 50 to 75 lb/in^2 gage so that the flashed amine can be delivered to the top of the regenerator without a pump. Steam from the reboilers using 50-lb/in^2 gage saturated steam strips the acid gas (H_2S and CO_2) from the amine. The overhead is cooled to 38 to 49°C to minimize water carryover to the SRU. Provision is made at the reflux accumulator and at the bottom of the regenerator to skim off light and heavy hydrocarbons respectively. The regenerated amine is filtered and cooled, then distributed to the various absorbers.

Downloaded from Digital Engineering Library @ McGraw-Hill (www.digitalengineeringlibrary.com)
Copyright © 2004 The McGraw-Hill Companies. All rights reserved.
Any use is subject to the Terms of Use as given at the website.

KBR REFINERY SULFUR MANAGEMENT

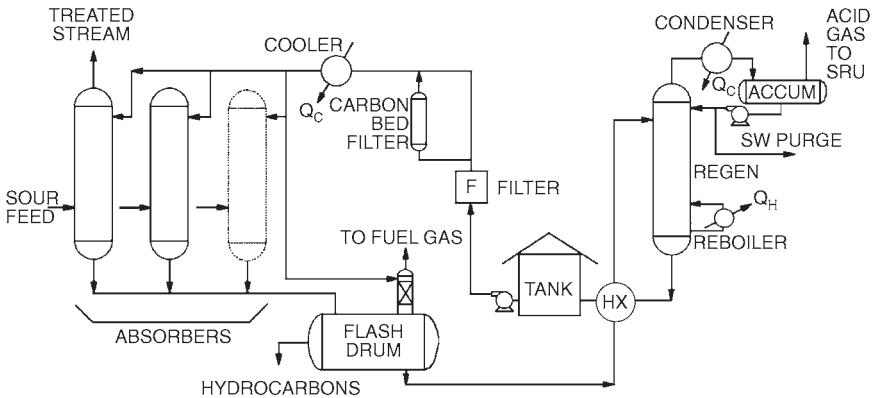

FIGURE 11.1.5 Amine regeneration unit.

Process Variables

Amine selection is normally between monoethanol amine (MEA, 15 to 20 wt %), diethanol amine (DEA, 25 to 33 wt %), and methyl diethanol amine (MDEA, 45 to 50 wt %). MEA, being a primary amine, is highly reactive, but is degraded by COS, CS_2, and even CO_2. These nonregenerable degradation products require that MEA units employ a semibatch reclaimer. DEA is not as reactive as MEA, but still easily achieves treated product specification. Compared to MEA, DEA is more resistant to degradation from COS, CS_2, and CO_2, but DEA cannot easily be reclaimed. Generic MDEA reactivity is low and may not meet treated product specification at low pressures. Its increasing use is a result of its selectivity for H_2S over CO_2 and its lower energy requirements. Formulated MDEA can achieve greater reactivity and still lower energy requirements, but its cost is high. In refineries, DEA is used most often typically as a 25 to 33 wt % solution in water.

Sour feeds from cokers and catalytic crackers typically contain acids (acetic, formic, etc.) and oxygen. These contaminants react with the amine to form heat-stable salts (HSS) and to increase the foaming and corrosivity potential of the amine solution. A water wash ahead of the amine absorbers is recommended to minimize acid carryover with the sour feeds. In extreme cases, if the concentration of the HSS exceeds 10 percent of the amine concentration, a slipstream of the amine will need to be reclaimed.

Ammonia (from the nitrogen in the crude) can concentrate at the top of the regenerator and cause severe corrosion there. A purge on the reflux return line to the SWS keeps the NH_3 at more tolerable levels.

For economy, most refineries will employ a common regenerator for the amine treating associated with the main refinery units. TGCUs typically use a selective amine such as MDEA. The size and operation of the MDEA unit is such that it is nearly always kept separate from other refining amine units.

The required lean amine acid gas residual is a function of the specifications for the treated products. Typically, recycle gas is treated to about 10 vol ppm H_2S, fuel gas H_2S is 160 vol ppm or lower, and the treated LPG H_2S should not exceed 50 wt ppm. Since the lean amine is in equilibrium with the treated product at the top of the absorber, the required residual at the pressure and temperature conditions can be calculated.

Allowable rich amine loadings (moles of acid gas per mole of amine) vary with the chosen amine and are higher for H_2S than CO_2. At high pressures, high loadings can be

Downloaded from Digital Engineering Library @ McGraw-Hill (www.digitalengineeringlibrary.com)
Copyright © 2004 The McGraw-Hill Companies. All rights reserved.
Any use is subject to the Terms of Use as given at the website.

KBR REFINERY SULFUR MANAGEMENT

employed without exceeding a 70 percent approach to equilibrium at the absorber bottom. However, high loadings need to be weighed against the increased corrosiveness of the rich amine solution when it is depressurized at the separation drum and beyond. Acid gas loadings typically vary from 0.2 to 0.5 mol/mol. In LPG liquid treaters, lower loadings may be necessary because of enhanced LPG-amine contact and tower hydraulics.

Operating Considerations

The major operating considerations for amine units are maintaining the condition of the amine solution, minimizing losses and preventing hydrocarbon carryover to the sulfur plant. Solution cleanliness is achieved by 100 percent particulate filtration and a 10 to 20 percent slipstream filtration through a carbon bed absorber to remove hydrocarbons, foaming, and heat-stable salt precursors. Amine temperatures at the bottom of the regenerator should not exceed 126°C. If high back-pressure from the Claus and TGCUs makes this difficult, the possibility of lowering the amine concentration or of a pumparound regenerator cooling system should be investigated.

While the carbon bed absorber may remove some of the precursors that lead to heat-stable salt formation, the HSS in the amine solution should not be allowed to exceed 10 percent of the amine concentration.

Water washes at the top of the absorbers are an effective way to reduce amine losses, and excess water can be bled off at the reflux purge to the SWS. The rich amine separator drum is a three-phase separator with 20 to 30 minutes' residence time provided to separate the hydrocarbons. Additional hydrocarbon skims also may be provided at the reflux accumulator and at the regenerator tower bottom surge chamber.

Economics

The cost of an ARU is strongly dependent on the circulation and, to a lesser degree, the stripping steam (reboiler size) requirements. Full-flow particulate filtration and large carbon bed adsorbers increase capital cost, but are justified by significantly reduced operating costs and downtime.

SOUR WATER STRIPPING

Sour water in a refinery originates from using steam as a stripping medium in distillation or from reducing the hydrocarbon partial pressure in thermal or catalytic cracking. Also, some refinery units inject wash water to absorb corrosive compounds or salts that might cause plugging. This steam or water comes in contact with hydrocarbons containing H_2S; sour water is the result. The NH_3 present in sour water comes from the nitrogen in the crude oil or from ammonia injected into the crude fractionator to combat corrosion. In addition to H_2S and NH_3, sour water may contain phenols, cyanide, CO_2, and even salts and acids.

Process Description

A conventional SWS design is illustrated in Fig. 11.1.6. The sour water passes through a flash/separation drum and/or tank to flash off dissolved gases and to remove hydrocarbon oils and solids. The stripper feed is then heated by exchange with the stripper

Downloaded from Digital Engineering Library @ McGraw-Hill (www.digitalengineeringlibrary.com)
Copyright © 2004 The McGraw-Hill Companies. All rights reserved.
Any use is subject to the Terms of Use as given at the website.

KBR REFINERY SULFUR MANAGEMENT

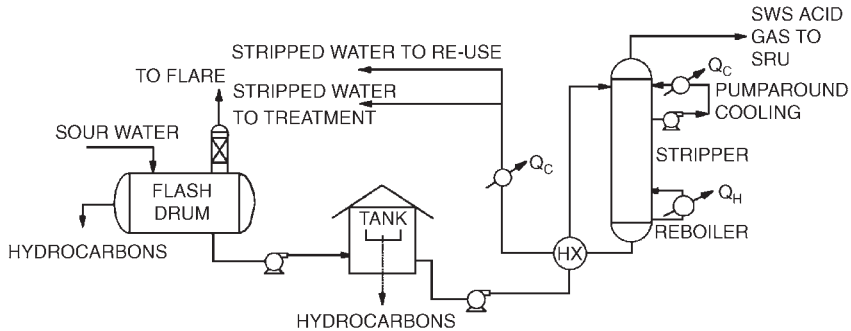

FIGURE 11.1.6 Conventional sour water stripper.

bottoms water. Steam is provided to the bottom of the stripper through a reboiler or by direct steam injection if the reboiler is out of service.

The stripped H_2S and NH_3 vapors pass through a cooling/dehumidification section at the top of the stripper. A pumparound cooler removes the heat. The acid gases, plus the uncondensed water vapor, flow to the sulfur plant at a temperature of 82 to 93°C.

The stripped water is cooled by exchange with the feed and is further cooled by air or water, if necessary, before being reused or sent to a biological treating unit.

Process Chemistry

The chemistry assumes that NH_3 and H_2S are present in the aqueous solution as ammonium hydrosulfide (NH_4HS), which is the salt of a weak acid (H_2S) and a weak base (NH_4OH). The salt hydrolyzes in water to from free NH_3 and H_2S, which then exert a partial pressure and can be stripped. The aqueous phase equilibrium is

$$NH_4^+ + HS^- \rightleftarrows H_2S + NH_3$$

Increasing the temperature shifts the equilibrium to the right, and makes it easier to strip out H_2S and NH_3. H_2S is much less soluble and is therefore more easily stripped. When acidic components such as CO_2 or CN^- are present, they replace HS^- in the above equations, and the NH_3 becomes bound in solution as a salt such as $(NH_4)_2CO_3$. The free NH_3 formed by hydrolysis is small. Thus, the H_2S removal is higher than predicted, while the NH_3 removal is lower.

Process Variables

Steam, fuel gas, and air are all possible media to strip the sour water. To meet stripped water specifications, steam normally is required and is almost exclusively used in refinery sour water treatment.

A typical stripped water specification limits H_2S to 1 to 10 wt ppm and NH_3 to 30 to 200 wt ppm. Normally, it is the NH_3 specification that governs the stripper design, since it is much more difficult to strip than H_2S. Some stripper designs use caustic to free the bound ammonia, particularly when the feed has appreciable CO_2 or cyanides.

The presence of phenols and cyanides in the sour water also can have an impact on the number of strippers. Nonphenolic sour water strippers process sour water with H_2S and

Downloaded from Digital Engineering Library @ McGraw-Hill (www.digitalengineeringlibrary.com)
Copyright © 2004 The McGraw-Hill Companies. All rights reserved.
Any use is subject to the Terms of Use as given at the website.

KBR REFINERY SULFUR MANAGEMENT

NH_3 only. The stripped water is usually suitable for recycle to process units as injection wash water. Phenolic sour water contains phenols and other pollutants from catalytic crackers and cokers, and stripped water from phenolic sour water strippers is corrosive and may poison catalysts if used as injection wash water.

In conventional single-stage strippers, an acid gas containing H_2S and NH_3 is produced. This means that the SRU must be designed for NH_3 burning. An alternative is to use a two-stage stripper (such as Chevron's WWT) that produces separate NH_3 and H_2S product streams.

It is desirable to recycle as much of the stripped water as possible. Stripper water may be reused in the crude desalter, as makeup water for coker/cruder units, as wash water for the hydrotreaters, and occasionally, as cooling tower makeup water. The use of segregated strippers and the specifications of the stripped water determine the extent by which the stripped water can be reused.

Operating Considerations

Major operating considerations for sour water strippers are the foul service and corrosive environment. Some reboilers may last only 6 months to a year without cleaning, and provision for direct steam injection is advisable. The use of pumparound cooling instead of overhead condensing reduces corrosion. Extreme care is needed in metallugy selection.

Economics

The cost of sour water strippers is strongly dependent on the sour water flow. As would be expected, stripped water specifications and installed tankage capacity also affect the capital costs.

SULFUR RECOVERY

SRUs convert the H_2S in the acid gas streams from the amine regeneration and SWS units into molten sulfur. Typically, a two- or three-stage Claus straight-through process recovers more than 92 percent of the H_2S as elemental sulfur. Most refineries require sulfur recoveries greater than 98.5 percent, so the third Claus stage is operated below the sulfur dew point, it is replaced with a selective oxidation catalyst, such as Superclaus,* or a TGCU follows the Claus unit. It is becoming increasingly popular to degas the produced molten sulfur. Shell, Elf Aquitaine, and others offer proprietary processes that degas the molten sulfur to 10 to 20 wt ppm H_2S.

Process Description

The Claus process, illustrated in Fig. 11.1.7 and photographed with a TGCU in Fig. 11.1.8, consists of a thermal recovery stage followed by two or three stages of catalytic recovery. In the thermal recovery zone, the acid gas is burned in a reaction furnace with the appropriate amount of air to combust approximately one-third the H_2S plus all

*Trademark of Stork Comprimo.

Downloaded from Digital Engineering Library @ McGraw-Hill (www.digitalengineeringlibrary.com)
Copyright © 2004 The McGraw-Hill Companies. All rights reserved.
Any use is subject to the Terms of Use as given at the website.

KBR REFINERY SULFUR MANAGEMENT

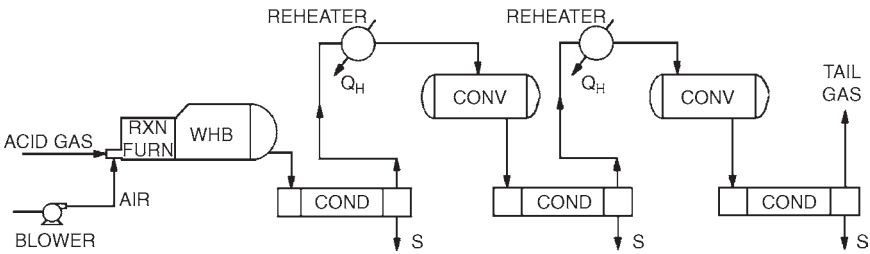

FIGURE 11.1.7 Two-stage Claus SRU.

the hydrocarbons and ammonia in the acid gas feed. The SO_2 from the combustion reacts with the uncombusted H_2S to form elemental sulfur. The products of combustion are cooled in the waste heat boiler and thermal sulfur condenser. Steam is raised at the steam drum associated with the waste heat boiler. Typically, 60 percent or more of the sulfur is recovered in the thermal recovery section of the Claus unit.

Following the thermal stage are two or three catalytic stages, each consisting of reheat (reheater), catalytic conversion (converter), and cooling with sulfur condensation. The sulfur is run down from each of the condensers into a sulfur pit, where optionally the sulfur is degassed. If the overall sulfur recovery requirement is between 96 and 99 percent, the last stage of the three-stage Claus unit can be replaced by a selective oxidation catalyst (such as Superclaus) or by a sub-dew-point reactor [such as Sulfreen* (Elf Aquitaine), CBA (Amoco), or MCRC (Delta-Catalytic)].

Process Chemistry

$$H_2S + \tfrac{3}{2}O_2 \rightarrow SO_2 + H_2O \qquad \text{(thermal)}$$

$$H_2S + \tfrac{1}{2}SO_2 \rightleftarrows \tfrac{3}{2}S + H_2O \qquad \text{(thermal and catalytic)}$$

Process Variables

Refineries generally require two or more Claus units to assure continued refinery unit operation during upsets, maintenance, or loss of one of the SRU. The choice between two or three is largely one of economics versus flexibility. Some Claus units can now be designed to use oxygen or enriched air when the other Claus unit is down so that only two Claus units are required.

SWS acid gas contains ammonia unless a two-stage SWS is employed. This ammonia can significantly increase the size of the Claus unit and can cause Claus operating problems if the ammonia is not fully destroyed in the thermal reactor zone. The design of burners and the reactor furnace configuration are strongly dependent on whether the Claus unit must have ammonia-burning capabilities. If all of the acid gas is not sent to the burner, the amine acid gas should be water-washed to remove traces of ammonia.

Replacing air with enriched air or oxygen significantly enhances the capacity of a Claus unit. This can be particularly attractive when a Claus unit is down or when an existing refinery needs to be revamped to handle higher sulfur capacity.

*Trademark of Elf Aquitaine.

Downloaded from Digital Engineering Library @ McGraw-Hill (www.digitalengineeringlibrary.com)
Copyright © 2004 The McGraw-Hill Companies. All rights reserved.
Any use is subject to the Terms of Use as given at the website.

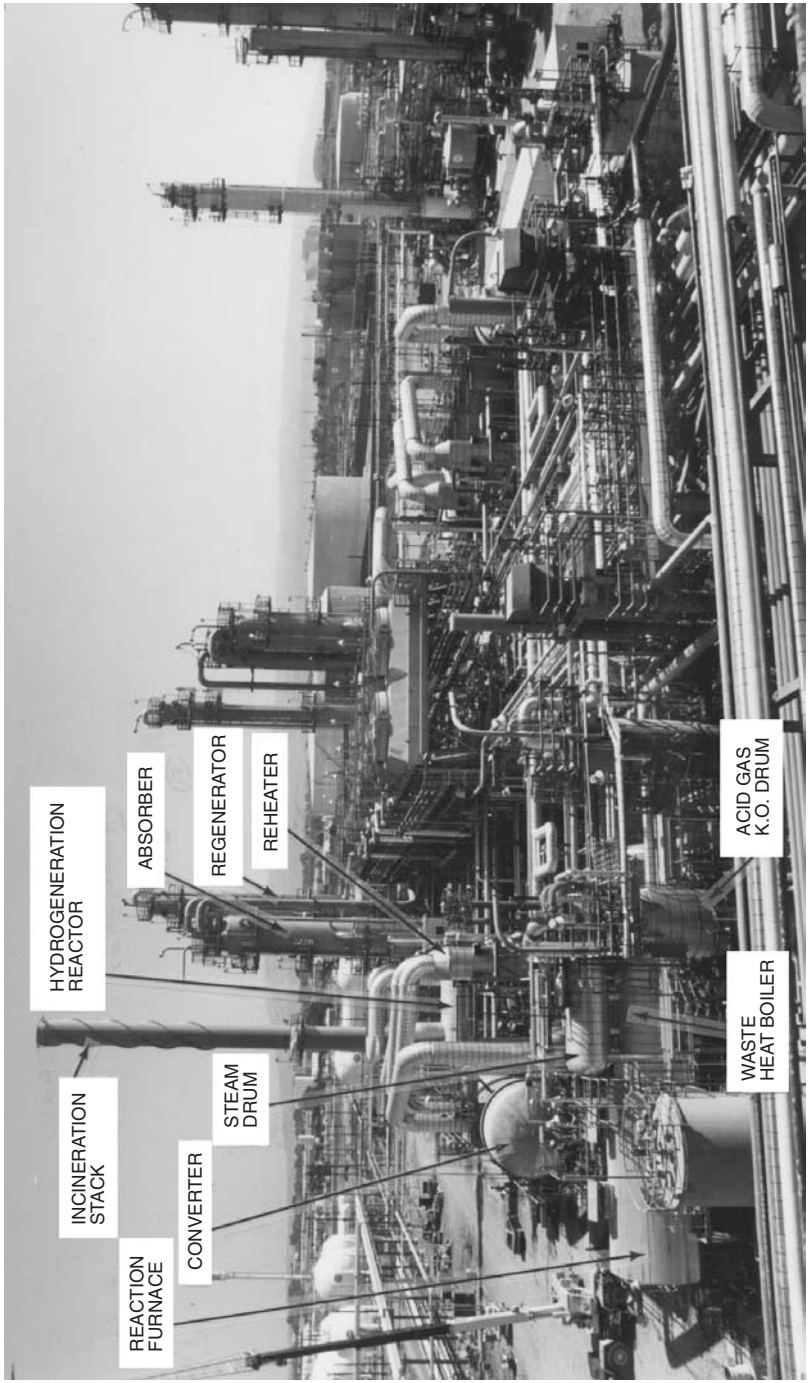

FIGURE 11.1.8 Claus unit and TGCU.

Downloaded from Digital Engineering Library @ McGraw-Hill (www.digitalengineeringlibrary.com)
Copyright © 2004 The McGraw-Hill Companies. All rights reserved.
Any use is subject to the Terms of Use as given at the website.

KBR REFINERY SULFUR MANAGEMENT

Reheat may be accomplished by in-line burners (using amine acid gas or fuel gas), hot gas bypass, external heating by steam, etc. These methods vary in cost, reliability, and maintenance requirements. External heating is usually the preferred method, but often the available heat source may not be hot enough to achieve the required reheat temperatures, particularly during catalyst rejuvenation periods.

The purpose of the Claus unit is to assist in achieving the environmentally mandated sulfur recovery requirement. Since the Claus unit often cannot do this alone, the design of the Claus unit (number of stages, selection of last stage between Claus, sub-dew-point and selective oxidation) has to be coupled with TGCU design when sub-dew-point or selective oxidation catalysis in the final SRU stage cannot meet the overall sulfur recovery requirements.

Operating Considerations

Best operating results are achieved when feed flows and compositions are maintained constant. Additionally, hydrocarbon carryover to the Claus unit must be minimized. These objectives are met by designing features into the amine and SWS units, such as large rich amine flash drums, and by providing sour water tankage.

When a unit is operated in the pure Claus mode, it is vital to keep the H_2S/SO_2 ratio in the tail gas at 2/1, since slight deviations cause significant loss in recovery. Superclaus units ahead of the Superclaus reactor should have a H_2S/SO_2 ratio of 10/1 or greater. Running Claus units at low turndown should be avoided because of instrumentation limits and greater corrosion potential.

Economics

The cost of an SRU is strongly dependent on the sulfur capacity and the number of catalytic stages. Ammonia-burning capabilities and low H_2S feed concentrations can significantly increase costs. The H_2S/CO_2 ratio in the feed also affects costs, although most refineries have a relatively rich aggregate acid gas feed. Degassing costs are almost totally dependent on sulfur capacity.

TAIL GAS CLEANUP

Overall sulfur recovery requirements at most refineries in the United States, Germany, etc., are higher than 99 percent, requiring that a TGCU follow the SRUs. The tail gas from the Claus unit contains H_2S, SO_2, CS_2, S vapor and entrained S liquid. Most tail gas cleanup processes hydrogenate/hydrolyze the sulfur compounds to H_2S, and then either recover or convert the H_2S. The H_2S recovery is usually by a selective amine. The H_2S conversion may use a liquid redox or catalytic process. The most popular TGCU processes are the Shell Claus Offgas Treating/Beavon Sulfur Reduction-MDEA (SCOT/BSR-MDEA) units and their clones. These are representative of the H_2S recovery processes and are capable of achieving overall recoveries of 99.9 percent of the sulfur in the acid gas to the SRUs.

Process Description

Figure 11.1.9 illustrates a SCOT-type TGCU. (Some of the major equipment items also are visible in Fig. 11.1.8.) The tail gas from the Claus unit is heated in the hydrogen-

Downloaded from Digital Engineering Library @ McGraw-Hill (www.digitalengineeringlibrary.com)
Copyright © 2004 The McGraw-Hill Companies. All rights reserved.
Any use is subject to the Terms of Use as given at the website.

KBR REFINERY SULFUR MANAGEMENT

erator reactor to the hydrogenation bed inlet temperature by an in-line burner. Fuel gas is combusted substoichiometrically with steam to generate a reducing gas (H_2, CO) and to heat the tail gas. In the reactor, all the sulfur compounds are converted to H_2S according to the process chemistry described below. The reactor products are cooled to generate steam, then further cooled to 38 to 49°C by a circulating quench water system. A bleed stream from the circulating quench water is sent to the SWS.

The gas from the quench tower overhead is then sent to an amine unit. (The absorber and regenerator of the amine section of the TGCU can be seen in Fig. 11.1.8.) The amine is selective but otherwise the flowsheet is almost identical to that described in Chap. 2.2. In SCOT, the absorber operates at low pressure, and there are no hydrocarbons in the tail gas. Thus, a rich amine flash drum is not needed. The filtration of the amine is usually upstream of the regenerator.

Process Chemistry

$$SO_2 + 3H_2 \rightarrow H_2S + 2H_2O$$

$$COS + H_2O \rightleftarrows H_2S + CO_2$$

$$CS_2 + 2H_2O \rightarrow 2H_2S + CO_2$$

$$S_{vap} + H_2 \rightarrow H_2S$$

Process Variables

In the Claus unit burner, typically 5 to 6 percent of the H_2S dissociates into H_2 and sulfur. Depending on the Claus sulfur recovery, it may not be necessary to generate additional reducing gas, enabling the tail gas to be heated externally to hydrogenation bed inlet temperature requirements. Alternatively, a makeup H_2 stream, available elsewhere in the refinery, may negate the need for reducing gas.

The amine is usually a selective amine. Its selection depends on the H_2S specification from the absorber. If the H_2S specification is 10 vol ppm, the absorber vent gas can be vented, thereby saving considerable fuel gas at the incinerator. However, achieving low H_2S levels requires a proprietary formulated MDEA, since generic MDEA will reduce H_2S to only 150 to 250 vol ppm depending on MDEA temperature.

More recently, some refineries have had to meet total sulfur content in the absorber treated gas. This is not usually a problem when the CO_2 in the Claus tail gas is low, but

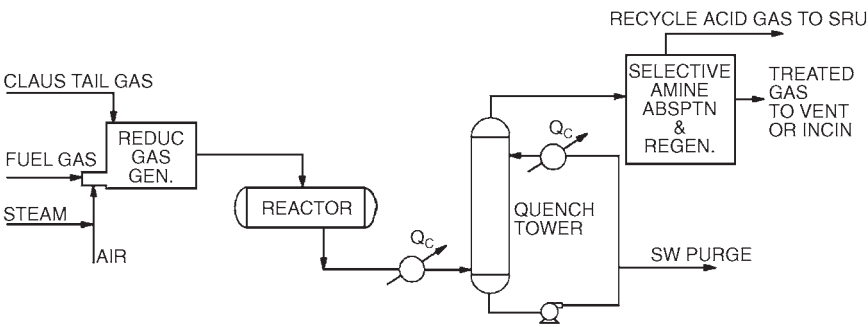

FIGURE 11.1.9 SCOT/BSR-MDEA (or clone) TGCU.

Downloaded from Digital Engineering Library @ McGraw-Hill (www.digitalengineeringlibrary.com)
Copyright © 2004 The McGraw-Hill Companies. All rights reserved.
Any use is subject to the Terms of Use as given at the website.

KBR REFINERY SULFUR MANAGEMENT

equilibrium constraints can cause COS levels from the hydrogenation reactor to be a problem when CO_2 levels are high. In such cases, a COS hydrolysis reactor downstream of the reactor effluent cooler may be warranted.

Operating Considerations

When the hydrogenation/hydrolysis catalyst loses activity, there is a danger of SO_2 breakthrough. This can cause corrosion in the circulating quench water circuit, and the SO_2 poisons the amine. Catalyst activity and pH levels of the circulating water should be carefully monitored. Maintenance of the MDEA solution is imperative. It is best to filter the MDEA upstream of the regenerator.

Economics

The cost of a SCOT or BSR/MDEA or equivalent clone is usually 75 to 100 percent of the parent Claus unit without degassing.

Downloaded from Digital Engineering Library @ McGraw-Hill (www.digitalengineeringlibrary.com)
Copyright © 2004 The McGraw-Hill Companies. All rights reserved.
Any use is subject to the Terms of Use as given at the website.

Source: HANDBOOK OF PETROLEUM REFINING PROCESSES

CHAPTER 11.2

BELCO EDV WET SCRUBBING SYSTEM: BEST AVAILABLE CONTROL TECHNOLOGY (BACT) FOR FCCU EMISSION CONTROL

Edwin H. Weaver and Nicholas Confuorto
Belco Technologies Corporation
Parsippany, New Jersey

THE FCCU—A UNIQUE PROCESS FOR EMISSIONS CONTROL

The control of particulate and SO_2 emissions with wet scrubbing systems is not uncommon. However, the control of these emissions, combined with the special needs and requirements of the fluid catalytic cracking unit (FCCU) process, indeed makes this a special process for wet scrubbing systems.

Uncontrolled particulate (catalyst) emissions from this source vary depending on the number of stages of internal and external cyclones. Although cyclones are effective in collecting the greater constituent of catalyst recirculated in the FCCU regenerator, the attrition of catalyst causes a significant amount of finer catalyst to escape the cyclone system with relative ease. Typically, emissions will range from 3.0 to 8.0 lb per 1000 lb of coke burn-off.

Sulfur emissions in the form of SO_x (SO_2 and SO_3) from the regenerator vary significantly depending on the feed sulfur content and the FCCU design. In the FCCU reactor, 70 to 95 percent of the incoming feed sulfur is transferred to the acid gas and product side in the form of H_2S. The remaining 5 to 30 percent of the incoming feed sulfur is attached to the coke and is oxidized into SO_x which is emitted with the regenerator flue gas. The sulfur distribution is dependent on the sulfur species contained in the feed, and in particular the amount of thiophenic sulfur. SO_2 can range from 200 to 3000 parts per million dry volume basis (ppm_{dv}), whereas SO_3 typically varies from an insignificant value to a maximum of 10 percent of the SO_2 content.

The FCCU application presents the additional requirement that in order to match the reliability of the FCCU, the air pollution control equipment must operate on-line for 3 to

Downloaded from Digital Engineering Library @ McGraw-Hill (www.digitalengineeringlibrary.com)
Copyright © 2004 The McGraw-Hill Companies. All rights reserved.
Any use is subject to the Terms of Use as given at the website.

BELCO EDV WET SCRUBBING SYSTEM: BEST AVAILABLE CONTROL TECHNOLOGY (BACT) FOR FCCU EMISSION CONTROL

5 years without interruption. It must be able to tolerate significant fluctuations in operating conditions, withstand the severe abrasion from catalyst fines, and maintain operation through system upsets. The robust design of the wet scrubbing system must tolerate all operations without requiring a shutdown. It is paramount that the operability of the air pollution control system be no less than that of the FCCU process.

CONTROLLED EMISSIONS—A TREND TOWARD LOWER LEVELS

By examining the trends of emissions regulations in the United States, a trend for better control of emissions from FCCUs can be established. The United States Environmental Protection Agency (USEPA) established New Source Performance Standards (NSPS) for emissions from FCCUs for new or significantly modified units. A summary of this standard is provided in Table 11.2.1. Additionally, a maximum achievable control technology (MACT) standard is in the final stages of promulgation. This standard, which is intended to regulate the amount of hazardous air pollutants (HAPs) from the FCCU, essentially established the particulate emission level at the same level as NSPS, or 1.0 lb/1000 lb of coke burned.

The USEPA also has been aggressive in pursing enforcement actions against refiners who, in its opinion, have significantly modified their facilities but avoided the NSPS regulations. This has resulted in several consent decrees where a refiner has agreed to install pollution controls to mitigate the impact of any past modifications made to its facility. Refiners who have reached consent decrees with the USEPA include Koch Refining, British Petroleum, Motiva/Equilon/Shell, Marathon Ashland LLC, Holly Corporation, Premcor Refining, Conoco, and Murphy Oil. In many cases, the agreed-to emissions levels (25 ppm SO_2 and 1. 0 lb/1000 lb of coke burned) are more restrictive than the NSPS regulations. Wet scrubbing systems are mandated for many of the facilities in the consent decrees.

A PROVEN WET SCRUBBER DESIGN FOR THE FCCU PROCESS

The worldwide leading technology to control emissions from this process is Belco Technologies Corporation's EDV wet scrubbing system. This wet scrubbing system controls particulate (catalyst dust), SO_2 (sulfur dioxide), and SO_3 (sulfuric acid mist) all in one system. Removal of relatively coarse particulate, which constitutes the majority of the par-

TABLE 11.2.1 New Source Performance Standards for FCCU Regenerator Emissions

Pollutant	FCCUs affected	Emission regulation
Particulate	All	1.0 lb/1000 lb Coke burn-off and 30% opacity
SO_2	With add-on SO_2 control device	50 ppm SO_2 or 90% reduction, whichever is least stringent
	Without add-on SO_2 control device	9.8 lb SO_2/1000 lb coke burn-off Or 0.3% Sulfur in feed (% by weight)

Downloaded from Digital Engineering Library @ McGraw-Hill (www.digitalengineeringlibrary.com)
Copyright © 2004 The McGraw-Hill Companies. All rights reserved.
Any use is subject to the Terms of Use as given at the website.

BELCO EDV WET SCRUBBING SYSTEM: BEST AVAILABLE CONTROL TECHNOLOGY (BACT) FOR FCCU EMISSION CONTROL

ticulate from the FCCU, is accomplished in the absorber vessel where caustic soda (NaOH) or other reagents are utilized to absorb SO_2 and discharge it in the form of a soluble salt. Fine particulate control and significant reduction of SO_3 in the form of sulfuric acid mist are accomplished in devices known as filtering modules. Excess water droplets are removed in highly efficient droplet separators. An EDV wet scrubbing installation in Texas is shown in Fig. 11.2.1. Another U.S. Gulf Coast refinery EDV wet scrubber is illustrated in Fig. 11.2.2.

The flue gas from the FCCU enters the spray tower, where it is immediately quenched to saturation temperature. Although the flue gas normally enters the wet scrubber after passing through a heat recovery device, the system is designed so that it can accept flue gas directly from the FCCU regenerator at the temperature at which it exits the FCCU regenerator. The spray tower itself is an open tower with multiple levels of spray nozzles. Each level of nozzles can have one or multiple nozzles depending on the diameter of the absorber vessel. Since it is an open tower, there is nothing to clog or plug in the event of a process upset. In fact, this design has handled numerous process upsets where more than 100 tons of catalyst has been sent to the wet scrubber in a very short period of time. An illustration of this spray tower is provided in Fig. 11.2.3.

FIGURE 11.2.1 EDV wet scrubbing system in Texas.

Downloaded from Digital Engineering Library @ McGraw-Hill (www.digitalengineeringlibrary.com)
Copyright © 2004 The McGraw-Hill Companies. All rights reserved.
Any use is subject to the Terms of Use as given at the website.

BELCO EDV WET SCRUBBING SYSTEM: BEST AVAILABLE CONTROL TECHNOLOGY (BACT) FOR FCCU EMISSION CONTROL

FIGURE 11.2.2 EDV wet scrubber at U.S. Gulf Coast refinery.

In the spray tower, coarse particulate is removed through the simple process of liquid from the spray nozzles impacting on the particulate. Reduction of SO_2 is accomplished by adding reagent, usually caustic, to the liquid being circulated in the absorber vessel. Assuming caustic is used, the SO_2 reacts with caustic to form sodium sulfites, some of which oxidizes to sodium sulfates. Both of these are dissolved solids.

These nozzles, used for both the quench and the spray tower, are LAB-G nozzles. They are a unique design and a key element of the system. They are nonplugging, constructed of abrasion-corrosion-resistant material, and capable of handling high concentrated slurries. Unlike in most nozzle designs, this nozzle has a large opening that cannot plug and is designed to operate at low liquid pressure, both important factors in long-term life. As previously noted, these nozzles remove coarse particulate by impacting on the liquid droplets. They also spray the reagent solution to reduce SO_2 emissions. By design, they produce relatively large water droplets, which prevent the formation of mist and the need for a conventional mist eliminator that will be prone to plugging. This is unique in wet scrubbing system designs as any other design that uses a nozzle which produces mist size water droplets will require a mist eliminator to eliminate these droplets. Mist eliminators have

Downloaded from Digital Engineering Library @ McGraw-Hill (www.digitalengineeringlibrary.com)
Copyright © 2004 The McGraw-Hill Companies. All rights reserved.
Any use is subject to the Terms of Use as given at the website.

BELCO EDV WET SCRUBBING SYSTEM: BEST AVAILABLE CONTROL TECHNOLOGY (BACT) FOR FCCU EMISSION CONTROL

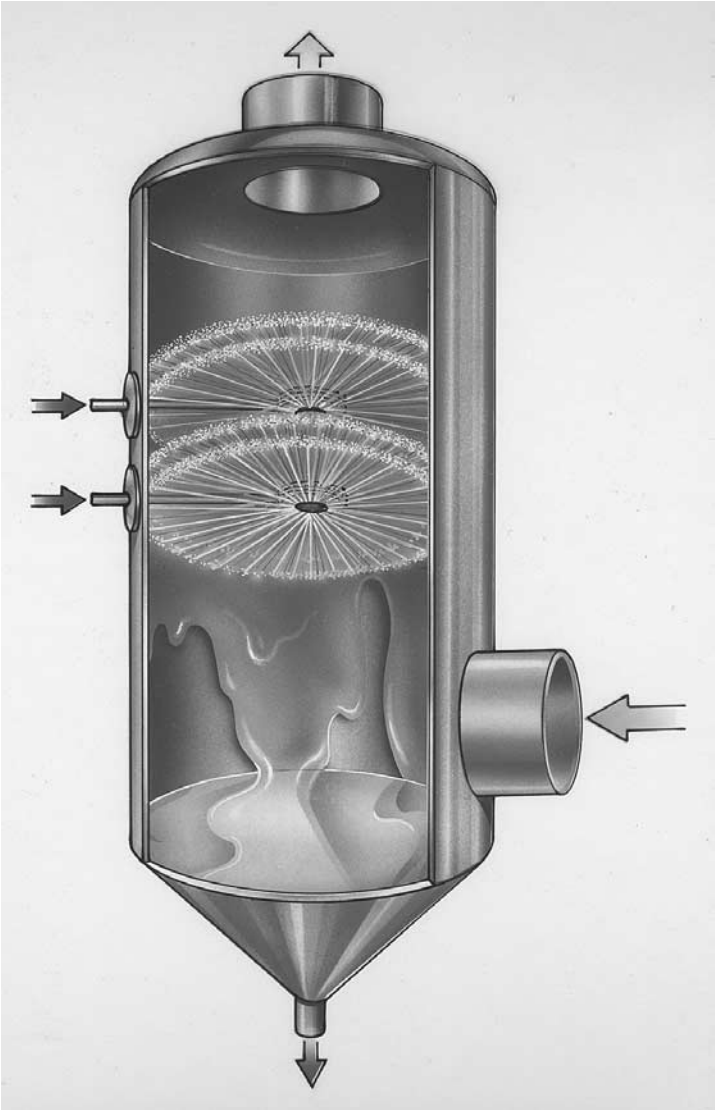

FIGURE 11.2.3 EDV absorber vessel/spray tower.

plugged in the presence of catalyst. This nozzle is illustrated in Fig. 11.2.4 and is shown spraying liquid in Fig. 11.2.5.

Upon leaving the spray tower, the saturated gases are directed to the EDV filtering modules for removal of the fine particulate. This is achieved through saturation, condensation, and filtration. Since the gas is already saturated, condensation is the first step in the filtering modules. The gases are accelerated slightly to cause a change in their energy state, and a state of supersaturation is achieved through adiabatic expansion. Condensation

Downloaded from Digital Engineering Library @ McGraw-Hill (www.digitalengineeringlibrary.com)
Copyright © 2004 The McGraw-Hill Companies. All rights reserved.
Any use is subject to the Terms of Use as given at the website.

BELCO EDV WET SCRUBBING SYSTEM: BEST AVAILABLE CONTROL TECHNOLOGY (BACT) FOR FCCU EMISSION CONTROL

FIGURE 11.2.4 Absorber vessel spray nozzle.

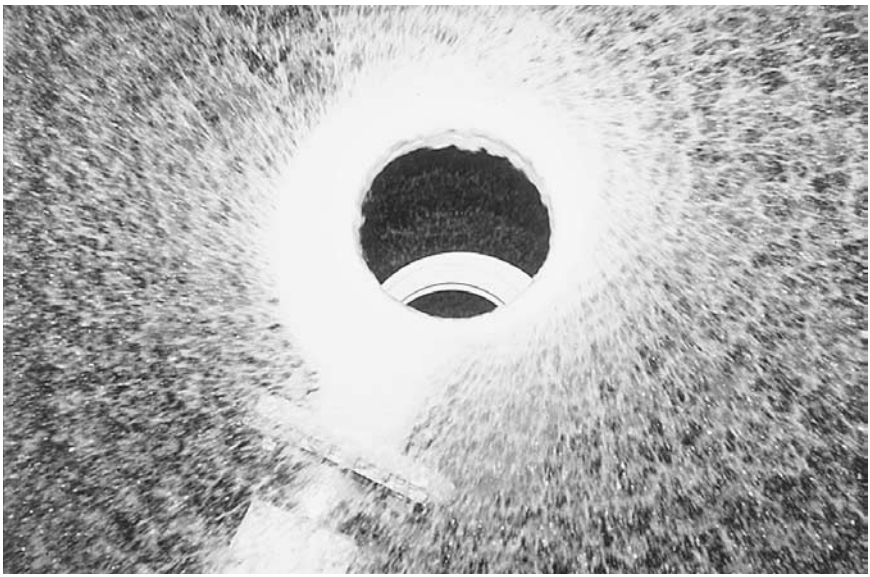

FIGURE 11.2.5 Absorber vessel nozzle spraying liquid.

Downloaded from Digital Engineering Library @ McGraw-Hill (www.digitalengineeringlibrary.com)
Copyright © 2004 The McGraw-Hill Companies. All rights reserved.
Any use is subject to the Terms of Use as given at the website.

BELCO EDV WET SCRUBBING SYSTEM: BEST AVAILABLE CONTROL
TECHNOLOGY (BACT) FOR FCCU EMISSION CONTROL

occurs on the fine particulate and acid mist. This causes a dramatic increase in size of the fine particulate and acid mist, which significantly reduces the required energy and complexity of its removal. A LAB-F nozzle located at the bottom of the filtering module and spraying upward provides the mechanism for the collection of the fine particulate and mist. This device has the unique advantage of being able to remove fine particulate and acid mist with an extremely low pressure drop and no internal components which can wear and be the cause of unscheduled shutdowns. It is also relatively insensitive to fluctuations in gas flow. This device is illustrated in Fig. 11.2.6.

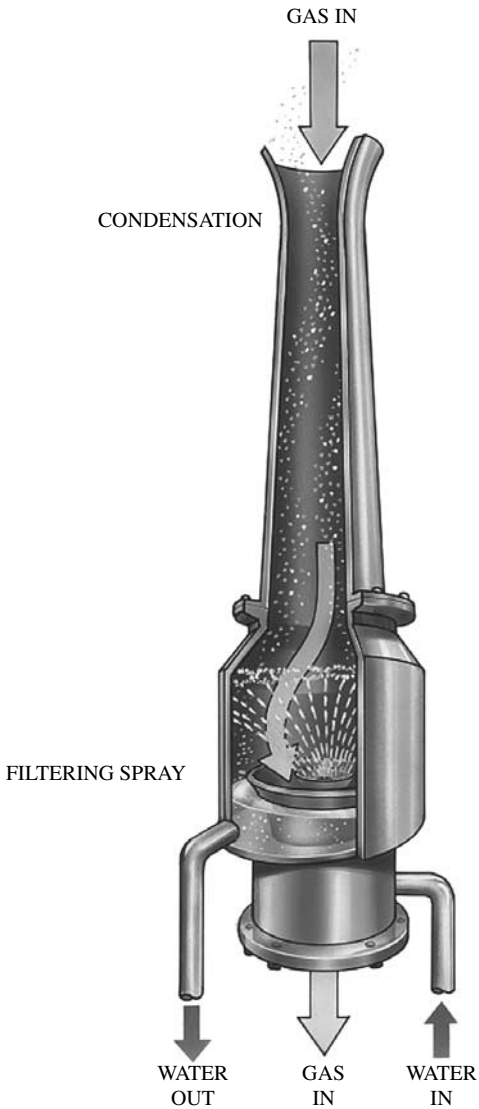

FIGURE 11.2.6 Filtering module.

Downloaded from Digital Engineering Library @ McGraw-Hill (www.digitalengineeringlibrary.com)
Copyright © 2004 The McGraw-Hill Companies. All rights reserved.
Any use is subject to the Terms of Use as given at the website.

BELCO EDV WET SCRUBBING SYSTEM: BEST AVAILABLE CONTROL TECHNOLOGY (BACT) FOR FCCU EMISSION CONTROL

To ensure droplet-free gas, the flue gas then goes through a droplet separator. This is an open design that contains fixed spin vanes that induce a cyclonic flow of the gas. As the gases spiral down the droplet separator, the centrifugal forces drive any free droplets to the wall, separating them from the gas stream. This device has a very low pressure drop with no internal components which could plug and force the stoppage of the FCCU. This device is illustrated in Fig. 11.2.7.

FIGURE 11.2.7 Droplet separator.

Downloaded from Digital Engineering Library @ McGraw-Hill (www.digitalengineeringlibrary.com)
Copyright © 2004 The McGraw-Hill Companies. All rights reserved.
Any use is subject to the Terms of Use as given at the website.

BELCO EDV WET SCRUBBING SYSTEM: BEST AVAILABLE CONTROL
TECHNOLOGY (BACT) FOR FCCU EMISSION CONTROL

ALTERNATE CONFIGURATIONS

One of the great benefits of the EDV wet scrubbing system's modular design is that the same proven modules can be arranged in many different configurations to fit a specific site requirement. The system can be provided in an upflow configuration to reduce plot space. Several of these designs have been sold to date.

The system can also be provided in a jet ejector configuration to offset pressure drop across the system. This configuration is marketed by Belco as its NPD design (which stands for *n*o *p*ressure *d*rop).

The major advantage of the Belco's NPD configuration over any other jet ejector configuration is that although it utilizes the same proven jet ejector units as the competition, the BELCO approach does not rely exclusively on the jet ejector to achieve the required efficiency. Belco places the jet ejectors after its primary scrubbing module (the quench and spray tower). Therefore, by the time the gas reaches the jet ejectors, it has already been cleaned of most of the particulates and SO_2. The jet ejectors are used only for polishing and for developing the required draft. This provides higher efficiencies than other jet ejector designs; and by placing the jet ejectors on the clean end of the scrubber, the wear and maintenance typically associated with jet ejectors are greatly reduced.

SCRUBBER PURGE TREATMENT

Assuming that a sodium-based system is used, purge from the wet scrubbing system contains catalyst fines as suspended solids, and sodium sulfite ($NaSO_3$) and sodium sulfate ($NaSO_4$) as dissolved solids. The purge treatment system removes the suspended solids and converts the sodium sulfite to sodium sulfate to reduce the chemical oxygen demand (COD) so that the effluent can be safely discharged from the refinery.

To remove the suspended solids, the purge treatment system contains a clarifier to separate the suspended solids and a filter press or dewatering bins to concentrate the solids into a filter cake which is cohesive and can be readily disposed of. The scrubber purge enters the clarifier from a deaeration tank. The solids settle out in the clarifier and are removed from the clarifier in the underflow. The underflow from the clarifier is sent to a filter press or dewatering bins where the excess water is removed. The solids are sent to disposal while the water is returned to the clarifier. The effluent is then sent to the oxidation towers.

The oxidation system consists of towers where air is forced into the effluent to oxidize the sodium sulfite to sodium sulfate. Effluent from the oxidation towers, which is now cleansed of catalyst (suspended solids) and has a low COD level, can be processed in the refinery wastewater system or possibly directly discharged from the refinery. A typical purge treatment system that employs a filter press is illustrated in Fig. 11.2.8.

REAGENT OPTIONS

Historically, most wet scrubbing systems on FCCUs have utilized caustic (NaOH) as the reagent. Caustic is readily available in refineries, is easy to handle, and has no solid reaction by-product. These systems have proved to be very effective and reliable, with continuous operation in excess of 5 years while handling all upset conditions that can occur.

With the escalating cost of caustic and the need to reduce the total liquid effluent from the system, some refiners are using soda ash (Na_2CO_3) as a reagent. The primary differ-

Downloaded from Digital Engineering Library @ McGraw-Hill (www.digitalengineeringlibrary.com)
Copyright © 2004 The McGraw-Hill Companies. All rights reserved.
Any use is subject to the Terms of Use as given at the website.

BELCO EDV WET SCRUBBING SYSTEM: BEST AVAILABLE CONTROL TECHNOLOGY (BACT) FOR FCCU EMISSION CONTROL

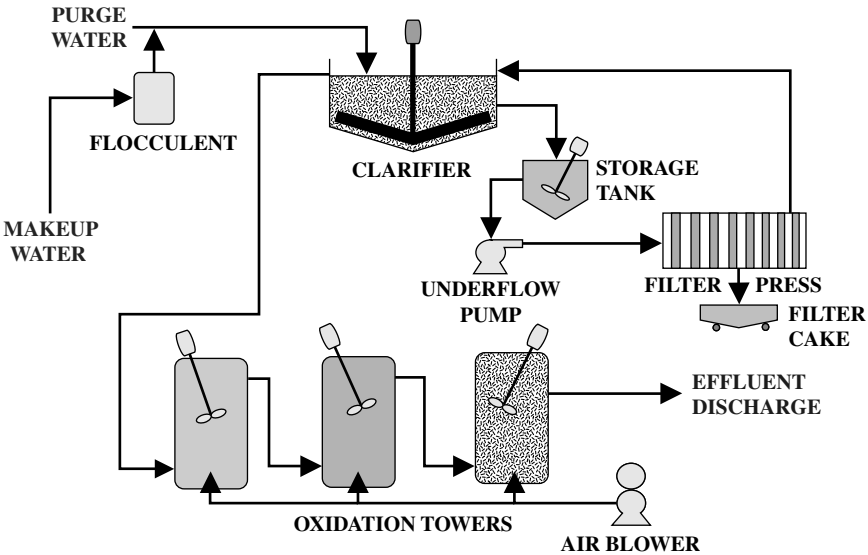

FIGURE 11.2.8 Typical purge treatment system.

ence between soda ash and caustic is that soda ash is delivered as a bulk solid and mixed into a liquid on site. However, it has the advantage of having no chlorides. High concentrations of chlorides attack the 316L stainless steel material used in the wet scrubber, so the level of chlorides must be controlled. With no chlorides from the soda ash, the dissolved solids concentration in the wet scrubber can be increased, thus reducing the amount of liquid that must be purged. Depending on the strategy for liquid effluent control, a low discharge volume is very important.

In a typical system, soda ash is delivered in dry bulk form. As the soda ash is blown into the storage silo from the truck, an eductor-type wetting system is used to mix the dry soda ash with water and slurry the soda ash. Soda ash liquor is drawn from the top third of the tank and pumped to the wet scrubbing system, where some of the soda ash is used by the wet scrubber. The amount used by the wet scrubber is based on pH control. The remaining soda ash is returned to the storage tank. This ensures that there is a continuous flow both to and from the storage tank. A typical soda ash delivery system is illustrated in Fig. 11.2.9.

Regenerative wet scrubbing systems are also gaining popularity. These systems have relatively low operating costs and have no liquid effluent discharge. In a typical regenerative system, the buffer is circulated in the EDV wet scrubbing system where it reacts with and removes the SO_2 in the flue gas. The buffer, rich in SO_2, is then sent to a regeneration plant.

Before entering the regeneration process, the SO_2-rich buffer is heated in a series of heat exchangers. The first heat exchanger utilizes the heat from the regenerated buffer being returned to the absorber vessel, while the second heat exchanger utilizes steam. After being heated, the buffer is sent to a double-loop evaporation circuit. These circuits use a heat exchanger, separator, and condenser to separate water and SO_2 from the buffer. Buffer, which is free of SO_2, is sent to a mixing tank, while the evaporated water and SO_2 are sent to a stripper.

Downloaded from Digital Engineering Library @ McGraw-Hill (www.digitalengineeringlibrary.com)
Copyright © 2004 The McGraw-Hill Companies. All rights reserved.
Any use is subject to the Terms of Use as given at the website.

BELCO EDV WET SCRUBBING SYSTEM: BEST AVAILABLE CONTROL
TECHNOLOGY (BACT) FOR FCCU EMISSION CONTROL

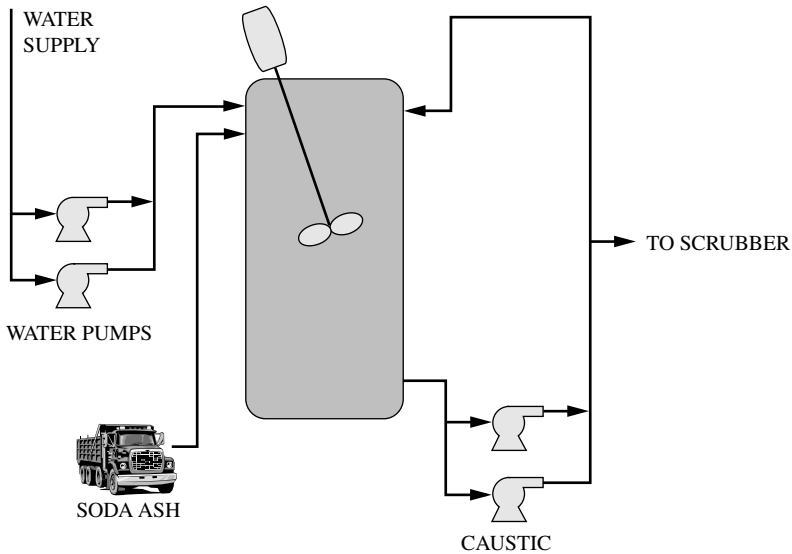

FIGURE 11.2.9 Typical soda ash delivery system.

In the stripper/condenser, the gas is cooled by counterflowing condensate from the condenser. The temperature of the SO_2-rich gas that leaves the condenser is used to control the amount of cooling medium that must be sent to the condenser. Condensate from the stripper is returned to the buffer mix tank. The SO_2-rich gas, containing at least 90 percent SO_2 with the remainder being water, is ready for transport to a process unit. In the refinery, this normally would be the sulfur recovery unit (SRU), where it would be converted to elemental sulfur. Also, this SO_2 that is sent to the SRU can help debottleneck the SRU process, especially if it is running close to capacity.

At periodic intervals, a quantity of concentrated buffer is bled from the evaporation circuit along with some condensate from the stripper. This is done to maintain a constant concentration of sodium phosphate in the buffer system. Sulfates are removed from this bleed stream through a patented process utilizing a series of filters. The filtrate collected in this process is the only waste generated in the process. This is a very small quantity, representing only 1 to 2 percent of the sulfur removed in the process. Disposal of this waste is through normal solid disposal techniques. The liquid from the filtrate process contains buffer and is returned to the buffer mix tank.

In the buffer mix tank, small quantities of buffer are added to make up for the buffer lost in the process, typically less than 2 percent. This regenerated buffer is then returned to the absorber vessel for removal of SO_2 from the flue gas.

Although lime-based systems are very common outside of refineries, they have not been popular for controlling FCCU emissions. This is primarily due to three factors. First, the buildups that occur in any lime-based scrubbing system necessitate the cleaning of the system every 2 years or less. This is not compatible with the turnaround cycles of 3 to 5 years for an FCCU. Next, the solids handling equipment associated with lime systems is extensive, resulting in high labor requirements and maintenance. Finally, a relatively huge quantity of gypsum is produced as a by-product. This is another large materials handling and disposal issue.

Downloaded from Digital Engineering Library @ McGraw-Hill (www.digitalengineeringlibrary.com)
Copyright © 2004 The McGraw-Hill Companies. All rights reserved.
Any use is subject to the Terms of Use as given at the website.

BELCO EDV WET SCRUBBING SYSTEM: BEST AVAILABLE CONTROL TECHNOLOGY (BACT) FOR FCCU EMISSION CONTROL

REAGENT SELECTION ECONOMICS

To illustrate the economic impact on the various design options available, a medium-size (30,000-BPSD) FCCU with a high (1800-ppm) SO_2 level was selected for evaluation purposes. This case uses caustic (NaOH) as the reagent and has the wet scrubbing system and purge treatment unit previously described. To compare the different options available, a base capital investment cost for this option is assigned with a level of 1. All additional cases will be evaluated against the capital cost of this option and a relative difference assigned to each case.

Operating cost is also a very important evaluation factor. Several factors were evaluated for operating costs. These include reagents (caustic at \$300/ton, soda ash at \$150/ton, phosphoric acid at \$890/ton), power at \$0.05/kWh makeup water at \$0.02/m^3, liquid effluent discharge at \$0.04/m^3, steam usage at \$0.57/1000 kg, solids disposal at \$44/1000 kg, and operation and maintenance costs per year at 2 percent of the capital investment. With the caustic scrubber being the *base case,* this option has been assigned an operating cost level of 1. However, it is interesting to see how the operating costs are distributed between the various factors. This is illustrated in Fig. 11.2.10. As can be seen, by far the major operating cost is the reagent. Power and operating and maintenance costs are relatively minor while the other costs are an extremely minor percentage of the total operating cost.

As illustrated in Fig. 11.2.11, the capital cost of the system increases as additional equipment is added. Since little additional equipment is required for a soda ash system, there is only a minor increase in capital cost over the cost of a caustic system. A soda ash scrubber with a crystallizer has a much higher increase in capital cost, primarily due to the cost of the crystallizer. Finally, the regenerative system has the highest capital cost, mostly due to the cost of the regeneration plant.

Operating costs also vary greatly. A caustic system has the highest operating cost due to the reagent cost. A soda ash scrubber has a lower operating cost, primarily due to lower reagent cost. A soda ash system with a crystallizer has a cost near that of a caustic system, mostly due to steam needs and additional power requirements. However, this option has the added benefit of no liquid effluent discharge which can be very important in some

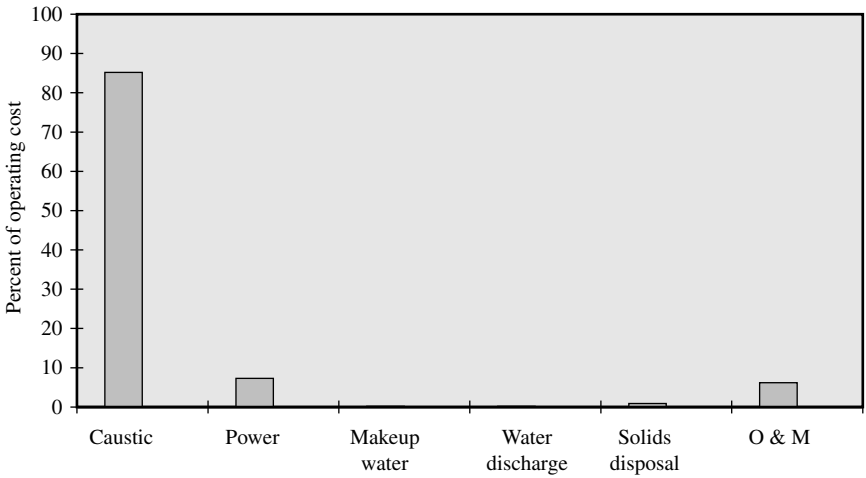

FIGURE 11.2.10 Distribution of operating costs in a wet scrubbing system.

Downloaded from Digital Engineering Library @ McGraw-Hill (www.digitalengineeringlibrary.com)
Copyright © 2004 The McGraw-Hill Companies. All rights reserved.
Any use is subject to the Terms of Use as given at the website.

BELCO EDV WET SCRUBBING SYSTEM: BEST AVAILABLE CONTROL TECHNOLOGY (BACT) FOR FCCU EMISSION CONTROL

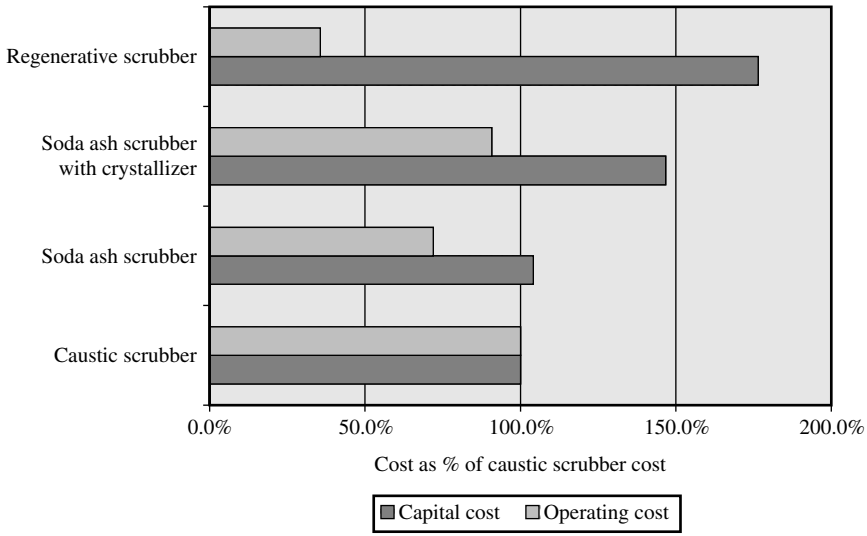

FIGURE 11.2.11 Capital and operating cost comparison.

situations. Finally, the regenerative system has the lowest operating cost, with reagent costs only a small fraction of those of nonregenerative systems. It also has the benefit of no liquid effluent discharge and has a by-product of SO_2 which can be processed into elemental sulfur in the SRU. With the regeneration plant properly designed, the system can also add scrubbers to other emission sources and process their buffer in the same regeneration facility. This is a great advantage if multiple scrubber systems are being considered or are required.

Another way to look at comparative system costs is to look at the equivalent cost per ton of SO_2 removed. The equivalent cost is determined by taking the system capital cost and determining an annualized cost. The annualized cost is calculated based on an interest rate of 10 percent and a 15-year equipment life. Once the annualized cost is calculated, the yearly operating cost is added to it to reach a total annualized cost. Dividing this cost by the tons of SO_2 removed will result in an equivalent cost. The equivalent costs for the four options considered are provided in Fig. 11.2.12.

The soda ash scrubber with a crystallizer has the highest equivalent cost while the regenerative scrubbing system has the lowest equivalent cost.

ACHIEVABLE EMISSIONS—A CASE HISTORY

As an example of the type of performance that can be achieved with a modern wet scrubbing system, the installation of a new wet scrubbing system is examined. This wet scrubbing system is installed on a new FCCU residual fluidized catalytic cracker (RFCC) with a design capacity of 10,500 BPSD. The RFCC was designed to process a variety of residual feedstocks. The RFCC has two stages of internal cyclones in the regenerator. Also, a CO boiler was installed after the regenerator for the reduction of CO. To comply with NSPS for particulate and SO_2 emissions, a wet scrubber was provided.

Downloaded from Digital Engineering Library @ McGraw-Hill (www.digitalengineeringlibrary.com)
Copyright © 2004 The McGraw-Hill Companies. All rights reserved.
Any use is subject to the Terms of Use as given at the website.

BELCO EDV WET SCRUBBING SYSTEM: BEST AVAILABLE CONTROL TECHNOLOGY (BACT) FOR FCCU EMISSION CONTROL

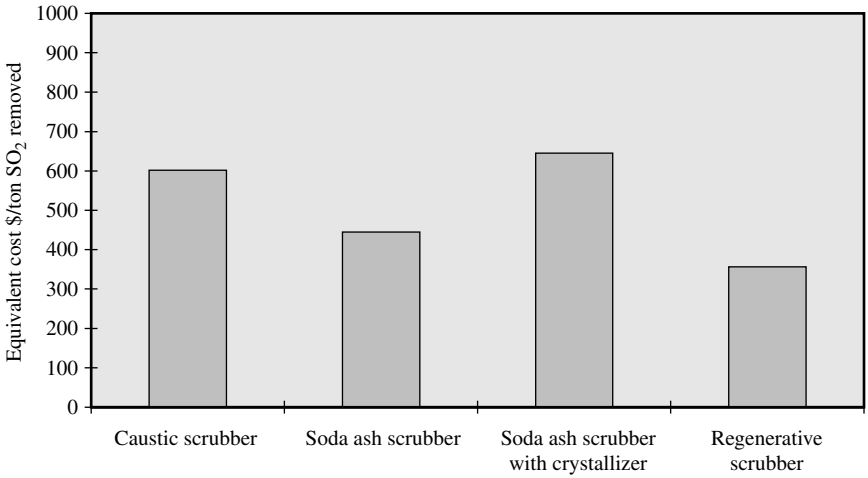

FIGURE 11.2.12 Equivalent cost comparison of different wet scrubbing solutions.

The system was placed into operation in 1997. Over the first several months of operation, the RFCC experienced multiple process upsets which resulted in as much as 20 to 30 percent of the catalyst inventory being carried out of the regenerator and into the wet scrubbing system. The wet scrubber readily handled all these process upsets. The operation of the scrubber was not interrupted. The system continued to operate, and the excessive solids were washed out of the system by overflowing the main scrubber recirculation tank to a tank where the solids could be settled out. These upsets also did not cause premature wear of the nozzles.

To demonstrate compliance with environmental regulations, emissions testing was performed to verify the emissions performance of the system. Testing was performed both at the inlet to the wet scrubbing system and at the stack. The results of these tests were exceptional.

First, the testing at the inlet to the EDV wet scrubbing system demonstrated that the system was operating at higher than design values for gas flow and SO_2 loading while having a lower than design loading for particulate. The flue gas flow rate was approximately 20 percent over design on a mass basis. SO_2 was approximately 3.1 times the design value on a mass basis. However, the particulate was approximately 50 percent of the design value on a mass basis. A summary of the average inlet test values, compared to the system design values, is presented in Table 11.2.2.

The performance of the system was excellent. SO_2 was only a small fraction of the design outlet value. The mass outlet SO_2 emissions were only 12 percent of the design values, while the tested removal efficiency was 99.92 percent compared to a design efficiency of 97.90 percent. Particulate emissions were also very low. The mass emission rate was approximately 24 percent of the design value, while the tested removal efficiency was 92.24 percent compared to the design removal efficiency of 83.70 percent. A summary and comparison of these data are provided in Table 11.2.3.

Downloaded from Digital Engineering Library @ McGraw-Hill (www.digitalengineeringlibrary.com)
Copyright © 2004 The McGraw-Hill Companies. All rights reserved.
Any use is subject to the Terms of Use as given at the website.

BELCO EDV WET SCRUBBING SYSTEM: BEST AVAILABLE CONTROL TECHNOLOGY (BACT) FOR FCCU EMISSION CONTROL

TABLE 11.2.2 Scrubbing System Inlet—Design and Tested Conditions

Item	Tested value	Design value
Flue gas flow	312,628 lb/h 133,904 ACFM	261,886 lb/h 106,644 ACFM
Flue gas temperature	483°F	550°F
Particulate loading	0.064 gr/DSCF 38 lb/h	0.178 gr/DSCF 76 lb/h
SO_2 loading	1314 ppm_{dv} 970 lb/h	626 ppm_{dv} 313 lb/h

TABLE 11.2.3 Scrubbing System Emissions—Design and Tested Conditions

Item	Tested value	Design value
Particulate emissions	0.0047 gr/DSCF 2.95 lb/h 92.24% removal efficiency	0.029 gr/DSCF 12.39 lb/h 83.70% removal efficiency
SO_2 emissions	1.0 ppm_{dv} 0.79 lb/h 99.92% removal efficiency	13.1 ppm_{dv} 6.55 lb/h 97.90% removal efficiency

A WEALTH OF EXPERIENCE

The EDV wet scrubbing system has presently been installed on more than 20 FCCUs with a total refining capacity of more than 1,000,000 BPSD. Many refiners have selected the EDV wet scrubbing system for multiple FCCUs within their system based on the reliability, ease of operation, durability, and satisfaction with the system design and performance. Additionally, more than another 200 EDV wet scrubbing systems have been installed in other non-FCC applications. Table 11.2.4 shows all EDV applications as of October 2002.

As the need to reduce emission levels continues to be an important focus, refiners will focus on wet scrubbing solutions as a way to meet present and future needs, while allowing them the maximum flexibility in refinery feedstock selection and operation. As they select the vendor of choice, refiners will focus on experience, system reliability, quality of service, and the ability of the system to achieve today's emissions consistently while having sufficient ability to be able to meet tomorrow's requirement without major rework. A modular-type design with the ability to meet or exceed all present requirements, such as the EDV wet scrubbing system, and which can easily be upgraded as the future environmental demands on the refinery increase is a great benefit to a refinery struggling to decipher the future of its environmental requirements.

Downloaded from Digital Engineering Library @ McGraw-Hill (www.digitalengineeringlibrary.com)
Copyright © 2004 The McGraw-Hill Companies. All rights reserved.
Any use is subject to the Terms of Use as given at the website.

BELCO EDV WET SCRUBBING SYSTEM: BEST AVAILABLE CONTROL TECHNOLOGY (BACT) FOR FCCU EMISSION CONTROL

TABLE 11.2.4 EDV Wet Scrubbing Installation List of FCCU Applications

Refining company	Refinery location	Capacity,* BPSD	Reagent
1. Valero Refining Company	Corpus Christi, Tex., USA	85,000	Caustic
2. Coastal	Westville, N.J., USA	50,000	Caustic
3. Quakerstate/Pennzoil	Shreveport, La., USA	10,500	Caustic
4. Orion/TransAmerica	Norco, La., USA	100,000	Caustic
5. Formosa Petrochemical—1	Mai Liao, Taiwan	73,000	Caustic/MgO
6. Formosa Petrochemical—2	Mai Liao, Taiwan	73,000	Caustic/MgO
7. Essar Oil Limited	Vadinar, India	59,500	Lime/caustic
8. Indian Oil Corp. Limited	Haldia, India	14,000	Caustic
9. Motiva	Port Arthur, Tex., USA	83,000	Caustic
10. Irving Oil Limited	St. John, NB, Canada	70,000	Caustic
11. Marathon Ashland Pet. LLC	Robinson, Ill., USA	48,000	Soda ash
12. Indian Oil Corp. Limited	Barauni, India	26,500	Caustic
13. National Oil Distribution Co.	Messaieed, Qatar	30,000	Caustic
14. Valero Refining Company	Texas City, Tex., USA	60,000	Caustic
15. TOSCO Refining Company	Ferndale, Wash., USA	30,000	Caustic
16. HPCL	Visakh, India	20,000	Caustic
17. Indian Oil Corp. Limited	Gujarat, India (new FCC)	60,000	Caustic
18. Indian Oil Corp. Limited	Gujarat, India (existing FCC)	30,000	Caustic
19. Marathon Ashland Pet. LLC	Texas City, Tex., USA	43,000	Caustic
20. AGIP	Sannazaro, Italy	34,000	LABSORB
21. Premcor	Hartford, Ill., USA	30,000	Caustic
22. Confidential Client	Europe	30,000	Caustic
23. Shell Oil	Deer Park, Tex., USA	67,500	Caustic
24. Lion Oil	El Dorado, Ariz., USA	20,000	Caustic
25. Valero Refining Company	Paulsboro, N.J., USA	65,000	Caustic

*Total capacity of FCCU applications by EDV wet scrubbing: 1,212,000 BPSD (as of October 2002)

Downloaded from Digital Engineering Library @ McGraw-Hill (www.digitalengineeringlibrary.com)
Copyright © 2004 The McGraw-Hill Companies. All rights reserved.
Any use is subject to the Terms of Use as given at the website.

Source: HANDBOOK OF PETROLEUM REFINING PROCESSES

CHAPTER 11.3
UOP MEROX PROCESS

G. A. Dziabis
UOP LLC
Des Plaines, Illinois

INTRODUCTION

The UOP* Merox* process is an efficient and economical catalytic process developed for the chemical treatment of petroleum fractions to remove sulfur present as mercaptans (Merox extraction) or to directly convert mercaptan sulfur to less-objectionable disulfides (Merox sweetening). This process is used for liquid-phase treating of liquefied petroleum gases (LPG), natural-gas liquids (NGL), naphthas, gasolines, kerosenes, jet fuels, and heating oils. It also can be used to sweeten natural gas, refinery gas, and synthetic gas in conjunction with conventional pretreatment and posttreatment processes.

Merox treatment can, in general, be used in the following ways:

- To improve lead susceptibility of light gasolines (extraction)
- To improve the response of gasoline stocks to oxidation inhibitors added to prevent gum formation during storage (extraction and sweetening)
- To improve odor on all stocks (extraction or sweetening or both)
- To reduce the mercaptan content to meet product specifications requiring a negative doctor test or low mercaptan content (sweetening)
- To reduce the sulfur content of LPG and light naphtha products to meet specifications (extraction)
- To reduce the sulfur content of coker or fluid catalytic cracking (FCC) C_3-C_4 olefins to save on acid consumption in alkylation operations using these materials as feedstocks or to meet the low-sulfur requirements of sensitive catalysts used in various chemical synthesis processes (extraction)

PROCESS DESCRIPTION

The UOP Merox process accomplishes mercaptan extraction and mercaptan conversion at normal refinery rundown temperatures and pressures. Depending on the application,

*Trademark and/or service mark of UOP.

Downloaded from Digital Engineering Library @ McGraw-Hill (www.digitalengineeringlibrary.com)
Copyright © 2004 The McGraw-Hill Companies. All rights reserved.
Any use is subject to the Terms of Use as given at the website.

UOP MEROX PROCESS

extraction and sweetening can be used either singly or in combination. The process is based on the ability of an organometallic catalyst to promote the oxidation of mercaptans to disulfides in an alkaline environment by using air as the source of oxygen. For light hydrocarbons, operating pressure is controlled slightly above the bubble point to ensure liquid-phase operation; for heavier stocks, operating pressure is normally set to keep air dissolved in the reaction section. Gases are usually treated at their prevailing system pressures.

Merox Extraction

Low-molecular-weight mercaptans are soluble in caustic soda solution. Therefore, when treating gases, LPG, or light-gasoline fractions, the Merox process can be used to extract mercaptans, thus reducing the sulfur content of the treated product. In the extraction unit (Fig. 11.3.1), the sulfur reduction attainable is directly related to the extractable-mercaptan content of the fresh feed.

In mercaptan-extraction units, fresh feed is charged to an extraction column, where mercaptans are extracted by a countercurrent caustic stream. The treated product passes overhead to storage or downstream processing.

The mercaptan-rich caustic solution containing Merox catalyst flows from the bottom of the extraction column to the regeneration section through a steam heater, which is used to maintain a suitable temperature in the oxidizer. Air is injected into this stream, and the mixture flows upward through the oxidizer, where the caustic is regenerated by converting mercaptans to disulfides. The oxidizer effluent flows into the disulfide separator, where spent air, disulfide oil, and the regenerated caustic solution are separated. Spent air is vented to a safe place, and disulfide oil is decanted and sent to appropriate disposal. For example, the disulfide oil can be injected into the charge to a hydrotreating unit or sold as a specialty product. The regenerated-caustic stream is returned to the extraction column. A small amount of Merox catalyst is added periodically to maintain the required activity.

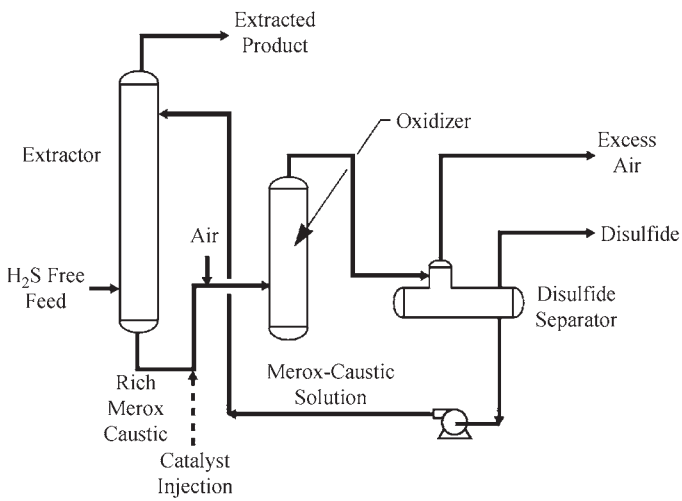

FIGURE 11.3.1 Merox mercaptan-extraction unit.

Downloaded from Digital Engineering Library @ McGraw-Hill (www.digitalengineeringlibrary.com)
Copyright © 2004 The McGraw-Hill Companies. All rights reserved.
Any use is subject to the Terms of Use as given at the website.

UOP MEROX PROCESS

Merox Sweetening

In sweetening units, the mercaptans are converted directly to disulfides, which remain in the product; the total sulfur content of the treated stock is not reduced.

Merox sweetening can be accomplished in four ways:

- Fixed-bed processing with intermittent circulation of caustic solution (Fig. 11.3.2)
- Minimum-alkali fixed-bed (Minalk*) processing, which uses small amounts of caustic solution injected continuously (Fig. 11.3.3)
- Caustic-Free Merox* treatment for gasoline (Fig. 11.3.4) and kerosene (Fig. 11.3.5)
- Liquid-liquid sweetening (Fig. 11.3.6)

Fixed-Bed Sweetening (Conventional). Fixed-bed sweetening (Fig. 11.3.2) is normally employed for virgin or thermally cracked chargestocks having endpoints above about 120°C (248°F). The higher-molecular-weight and more branched mercaptan types associated with these higher-endpoint feedstocks are only slightly soluble in caustic solution and are more difficult to sweeten. The use of a fixed-bed reactor facilitates the conversion of these types of mercaptans to disulfides.

Fixed-bed sweetening uses a reactor that contains a bed of specially selected activated charcoal impregnated with nondispersible Merox catalyst and wetted with caustic solution. Air is injected into the feed hydrocarbon steam ahead of the reactor, and in passing through the catalyst bed, the mercaptans in the feed are oxidized to disulfides. The reactor is followed by a settler for separation of caustic and treated hydrocarbon. The settler also serves as a caustic reservoir. Separated caustic is circulated intermittently to keep the catalyst bed wet. The frequency of caustic circulation over the bed depends on the difficulty of the feedstock being treated and the activity of the catalyst.

An important application of this fixed-bed Merox sweetening is the production of jet fuels and kerosenes. As a result of the development of the Merox fixed-bed system, jet fuels and kerosenes (also diesel and heating oils) can be sweetened at costs that are incomparably lower than those of the simplest hydrotreater. The same basic process flow just described is used. However, because of other particular jet-fuel quality requirements, some pretreatment and posttreatment are needed whenever any chemical sweetening process is used.

Fixed-Bed Sweetening (Minalk). This Merox sweetening version is applied to feedstocks that are relatively easy to sweeten, such as catalytically cracked naphthas and light virgin naphthas. This sweetening design achieves the same high efficiency as

*Trademark and/or service mark of UOP.

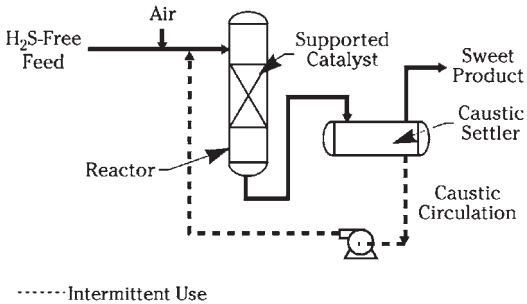

FIGURE 11.3.2 Fixed-bed Merox sweetening unit.

Downloaded from Digital Engineering Library @ McGraw-Hill (www.digitalengineeringlibrary.com)
Copyright © 2004 The McGraw-Hill Companies. All rights reserved.
Any use is subject to the Terms of Use as given at the website.

UOP MEROX PROCESS

conventional fixed-bed sweetening but with less equipment and lower capital and operating costs.

The UOP Merox Minalk process (Fig. 11.3.3) relies on a small, controlled, continuous injection of an appropriately weak alkali solution rather than the gross, intermittent alkali saturation of the catalyst bed as in conventional fixed-bed Merox sweetening. This small injection of alkali provides the needed alkalinity so that mercaptans are oxidized to disulfides and do not enter into peroxidation reaction, which would result if the alkalinity were insufficient.

Caustic-Free Merox. A different version of the Merox family is the Caustic-Free Merox process for sweetening gasoline and kerosene (Figs. 11.3.4 and 11.3.5). This technology development uses the same basic principles of sweetening in which the mercaptans are catalytically converted to disulfides, which remain in the treated hydrocarbon product.

The Caustic-Free Merox catalyst system consists of preimpregnated fixed-bed catalysts, Merox No. 21* catalyst for gasoline and Merox No. 31* catalyst for kerosene, and a liquid activator, Merox CF.* This system provides an active, selective, and stable sweetening environment in the reactor. The high activity allows the use of a weak base, ammonia, to provide the needed reaction alkalinity. No caustic (NaOH) is required, and fresh-caustic costs and the costs for handling and disposing of spent caustic are thus eliminated.

The actual design of the Caustic-Free Merox unit depends on whether it is used on gasoline or kerosene. The reactor section is similar to the previously mentioned fixed-bed systems, conventional and Minalk, except for the substitution of a different catalyst, the addition of facilities for continuous injection of the Merox CF activator, and replacement of the caustic injection facilities with ammonia injection facilities, anhydrous or aqueous. For kerosene or jet fuel production, the downstream water-wash system is modified to improve efficiency and to ensure that no ammonia remains in the finished product. Other posttreatment facilities for jet fuel production remain unchanged.

Liquid-Liquid Sweetening. The liquid-liquid sweetening version (Fig. 11.3.6) of the Merox process is not generally used today for new units as refiners switch to the more

*Trademark and/or service mark of UOP.

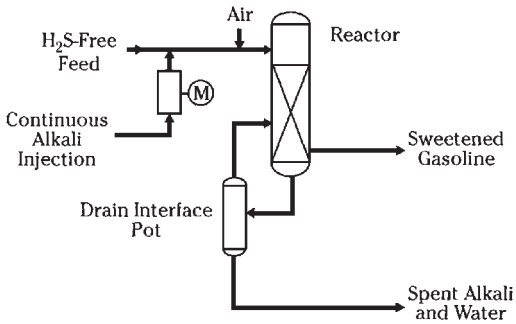

FIGURE 11.3.3 Fixed-bed minimum-alkali Merox sweetening unit.

Downloaded from Digital Engineering Library @ McGraw-Hill (www.digitalengineeringlibrary.com)
Copyright © 2004 The McGraw-Hill Companies. All rights reserved.
Any use is subject to the Terms of Use as given at the website.

UOP MEROX PROCESS

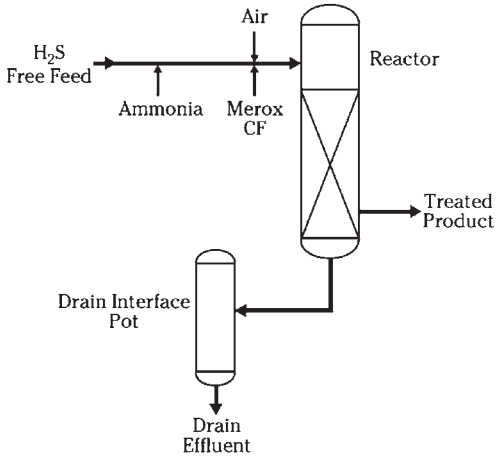

FIGURE 11.3.4
Caustic-Free Merox sweetening for gasoline.

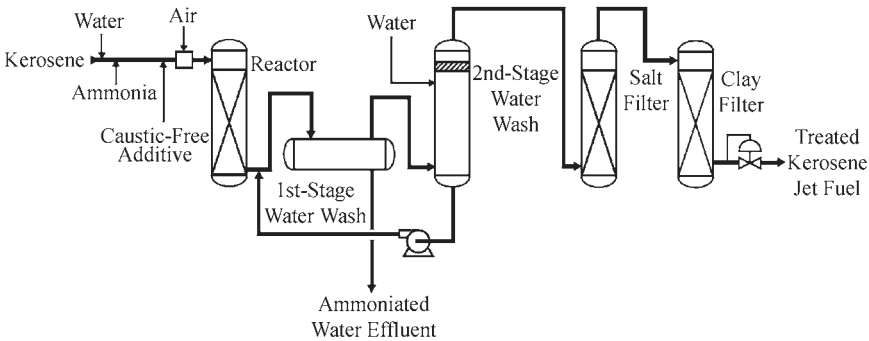

FIGURE 11.3.5 Caustic-Free Merox sweetening for kerosene jet fuel.

active fixed-bed systems. Hydrocarbon feed, air, and aqueous caustic soda containing dispersed Merox catalyst are simultaneously contacted in a mixing device, where mercaptans are converted to disulfides. Mixer effluent is directed to a settler, from which the treated hydrocarbon stream is sent to storage or further processing. Separated caustic solution from the settler is recirculated to the mixer. A small amount of Merox catalyst is added periodically to maintain the catalytic activity.

In general, liquid-liquid sweetening is applicable to virgin light, thermally cracked gasolines and to components having endpoints up to about 120°C (248°F). The mercaptan types associated with catalytically cracked naphthas are easier to oxidize than those contained in light virgin or thermal naphthas, and therefore liquid-liquid sweetening has been successfully applied to catalytically cracked gasolines having endpoints as high as 230°C (446°F).

The various applications of the Merox process on different hydrocarbon streams are summarized in Table 11.3.1.

Downloaded from Digital Engineering Library @ McGraw-Hill (www.digitalengineeringlibrary.com)
Copyright © 2004 The McGraw-Hill Companies. All rights reserved.
Any use is subject to the Terms of Use as given at the website.

UOP MEROX PROCESS

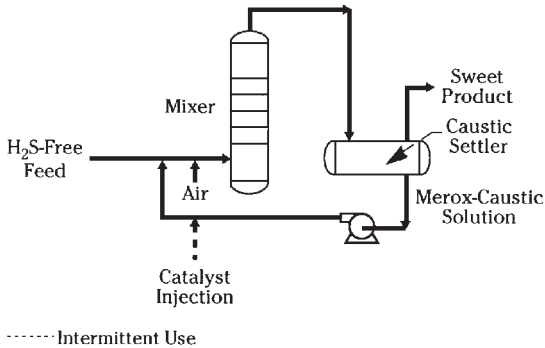

FIGURE 11.3.6 Liquid-liquid Merox sweetening unit.

TABLE 11.3.1 Merox Process Applications

Hydrocarbon stream	Merox type
Gas	Extraction
LPG	Extraction
Natural gas liquids	Extraction, extraction plus sweetening
Light naphtha	Extraction, liquid-liquid sweetening, Minalk sweetening, caustic-free sweetening
Medium or heavy naphtha	Liquid-liquid sweetening Caustic-free sweetening
Full-boiling-range naphtha	Extraction plus sweetening, Minalk sweetening, fixed-bed sweetening, caustic-free sweetening
Kerosene or jet fuel	Fixed-bed sweetening Caustic-free sweetening
Diesel	Fixed-bed sweetening

Merox Process Features

Relative to other treating processes, the Merox process has the following advantages.

Low Operating Cost and Investment Requirement. The noncorrosive environment in which the process operates requires no alloys or other special materials, thus minimizing investment. In many applications, investment is essentially nil because of the ease of converting existing equipment to Merox treating.

Ease of Operation. Merox process units are extremely easy to operate; usually, the air-injection rate is the only adjustment necessary to accommodate wide variations in feed rate or mercaptan content. Labor requirements for operation are minimal.

Proven Reliability. The Merox process has been widely accepted by the petroleum industry; many units of all kinds (extraction, liquid-liquid, and fixed-bed sweetening) have been placed in operation. By early 2002, more than 1700 of these UOP Merox units had been licensed.

Downloaded from Digital Engineering Library @ McGraw-Hill (www.digitalengineeringlibrary.com)
Copyright © 2004 The McGraw-Hill Companies. All rights reserved.
Any use is subject to the Terms of Use as given at the website.

UOP MEROX PROCESS

Minimal Chemical-Disposal Requirements. Caustic consumption by atmospheric CO_2, excessive acid in the feedstock, and accumulation of contaminants are the only reasons for the occasional replenishment of the caustic inventory.

Proven Ability to Produce Specification Products. Product deterioration as a result of side reactions does not occur nor does any addition of undesirable materials to the treated product. This fact is especially important for jet-fuel treating. In the Merox process, sweetening is carried out in the presence of only air, caustic soda solution, and a catalyst that is insoluble in both hydrocarbon and caustic solutions and cannot therefore have a detrimental effect on other properties that are important to fuel specifications.

High-Efficiency Design. The Merox process ensures high catalyst activity by using a high-surface-area fixed catalyst bed to provide intimate contact of feed, reactants, and catalyst for complete mercaptan conversion. The technology does not rely on mechanical mixing devices for the critical contact. State-of-the-art Merox technology has no requirement for continuous, high-volume caustic circulation that increases chemical consumption, utility costs, and entrainment concerns.

High-Activity Catalyst and Activators. Active and selective catalysts are important in promoting the proper mercaptan reactions even when the most difficult feedstocks are processed. For the extraction version of the process, UOP offers a high-activity, water-soluble catalyst, Merox WS,* which accomplishes efficient caustic regeneration. As a result, chemical and utility consumption is minimized, and mercaptans are completely converted. For the sweetening version of the Merox process, UOP offers a series of catalysts and promoters that provide the maximum flexibility for treating varying feedstocks and allow refiners to select which catalyst system is best for their situation.

PROCESS CHEMISTRY

The Merox process in all its applications is based on the ability of an organometallic catalyst to accelerate the oxidation of mercaptans to disulfides at or near ambient temperature and pressure. Oxygen is supplied from the atmosphere. The reaction proceeds only in an alkaline environment. The basic overall reaction can be written:

$$4RSH + O_2 \xrightarrow[\text{Alkalinity}]{\text{Merox catalyst}} 2RSSR + 2H_2O \tag{11.3.1}$$

where R is a hydrocarbon chain that may be straight, branched, or cyclic and saturated or unsaturated. Mercaptan oxidation, even though slow, reportedly occurs whenever petroleum fractions containing mercaptans are exposed to atmospheric oxygen. In effect, the Merox catalyst speeds up this reaction, directs the products to disulfides, and minimizes undesirable side reactions.

In Merox extraction, in which mercaptans in the liquid or gaseous feedstocks are highly soluble in the caustic soda solution as solvent, the mercaptan oxidation is done outside

*Trademark and/or service mark of UOP.

Downloaded from Digital Engineering Library @ McGraw-Hill (www.digitalengineeringlibrary.com)
Copyright © 2004 The McGraw-Hill Companies. All rights reserved.
Any use is subject to the Terms of Use as given at the website.

UOP MEROX PROCESS

the extraction environment. Therefore, a mercaptan-extraction step is followed by oxidation of the extracted mercaptan. These steps are:

$$\underset{\text{Oil phase}}{RSH} + \underset{\text{Aqueous phase}}{NaOH} \longrightarrow \underset{\text{Aqueous phase}}{NaSR} + H_2O \tag{11.3.2}$$

$$\underset{\text{Aqueous phase}}{4NaSR} + O_2 + 2H_2O \xrightarrow{\text{Merox catalyst}} \underset{\text{Aqueous phase}}{4NaOH} + \underset{\text{Oil phase (insoluble)}}{2RSSR} \tag{11.3.3}$$

According to these treating steps, the treated product has reduced sulfur content corresponding to the amount of mercaptan extracted.

In the case of Merox sweetening, in which the types of mercaptans in the feedstocks are difficult to extract, the sweetening process is performed in situ in the presence of Merox catalyst and oxygen from the air in an alkaline environment. UOP studies have shown that the mercaptan, or at least the thiol (—SH) functional group, first transfers to the aqueous alkaline phase (Fig. 11.3.7) and there combines with the catalyst. The simultaneous presence of oxygen causes this mercaptan-catalyst complex to oxidize, yielding a disulfide molecule and water. This reaction at the oil-aqueous interface is the basis for both liquid-liquid and fixed-bed sweetening by the Merox process and can be written:

$$\underset{\text{Oil phase}}{4RSH} + O_2 \xrightarrow[\text{Alkalinity}]{\text{Merox catalyst}} \underset{\text{Oil phase}}{2RSSR} + 2H_2O \tag{11.3.4}$$

$$\underset{\text{Oil phase}}{2R'SR} + 2RSH + O_2 \xrightarrow[\text{Alkalinity}]{\text{Merox catalyst}} \underset{\text{Oil phase}}{2R'SSR} + 2H_2O \tag{11.3.5}$$

Equation (11.3.5) represents the case in which two different mercaptans may enter into this reaction. Petroleum fractions have a mixture of mercaptans so that the R chain may have any number of carbon atoms consistent with the boiling range of the hydrocarbon feed.

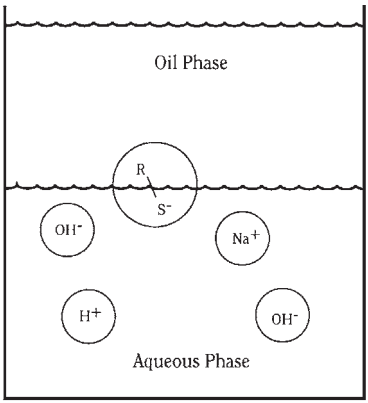

FIGURE 11.3.7 Mercaptide at interface.

Downloaded from Digital Engineering Library @ McGraw-Hill (www.digitalengineeringlibrary.com)
Copyright © 2004 The McGraw-Hill Companies. All rights reserved.
Any use is subject to the Terms of Use as given at the website.

UOP MEROX PROCESS

Because the process is catalytic, essentially catalyst and caustic soda are not consumed. This fact is borne out by commercial experience, in which actual catalyst consumptions are low. Consumption is due mainly to fouling by certain substances and loss through an occasional purge of dirty or diluted caustic solution and a corresponding makeup of fresh caustic to maintain effective caustic concentration.

PRODUCT SPECIFICATIONS

The only product specification applicable to Merox treating is the mercaptan sulfur content of the product because the Merox process per se has no effect on the other properties of the feedstock being treated. Generally, therefore, the Merox process is used to reduce the mercaptan sulfur content, and thereby the total sulfur content, when the process is applied to gases and light stocks in the extraction mode of operation. In the case of heavier chargestocks that require the sweetening mode of operation, the only product specification applied is the mercaptan sulfur content (or sometimes also the doctor test); the total sulfur contents of the untreated feed and the treated product are the same.

Merox-treated products may be finished products sent directly to storage without any further processing or intermediate products that may require either blending into finished stocks or additional processing for making other products.

Table 11.3.2 lists typical quality specifications for treating applications of the Merox process.

PROCESS ECONOMICS

Sample economics of the UOP Merox process in 2002 dollars on the basis of 10,000 barrels per stream day (BPSD) capacity for various applications are given in Table 11.3.3. The capital costs are for modular design, fabrication, and erection of Merox plants. The estimated modular cost is inside battery limits, U.S. Gulf coast, FOB point of manufacturer. The estimated operating costs include catalysts, chemicals, utilities, and labor.

PROCESS STATUS AND OUTLOOK

The first Merox process unit was put on-stream October 20, 1958. In October 1993, the 1500th Merox process unit was commissioned. Design capacities of these Merox units range from as small as 40 BPSD for special application to as large as 140,000 BPSD and total more than 12 million BPSD.

The application of the operating Merox units is distributed approximately as follows:

- 25 percent LPG and gases
- 30 percent straight-run naphthas
- 30 percent FCC, thermal, and polymerization gasolines
- 15 percent kerosene, jet fuel, diesel, and heating oils

Downloaded from Digital Engineering Library @ McGraw-Hill (www.digitalengineeringlibrary.com)
Copyright © 2004 The McGraw-Hill Companies. All rights reserved.
Any use is subject to the Terms of Use as given at the website.

TABLE 11.3.2 Quality Specifications for the Merox Process

Characteristics	Feed Type							
	Gases, LPG, NGL	NGL, LN	MN, HN	FBR gasoline	Jet fuels	Kerosene	Diesels	Heating oils
Feed:								
Mercaptan sulfur, wt ppm	50–10,000	50–2,000	50–5,000	50–5,000	30–1,000	30–1,000	50–800	50–800
H_2S, wt ppm*	<10	<10	<10	<10	<1	<1	<1	<1
Acid oil, wt %	....	....	<0.01	<0.01	<0.01	<0.01	<0.01	<0.01
Products:								
Mercaptan sulfur, wt ppm	<5–10	<5–10	<5–10	<5–10	<10	<10	<30	<30
Mercaptan sulfur + disulfide sulfur, wt ppm	10–20	<50						

*After caustic prewash, if any, before Merox process. LPG = liquefied petroleum gas; NGL = natural gas liquid; gas = natural gas, refinery gas, or synthesis gas; LN = light naphthas; MN and HN = medium and heavy naphthas; FBR = full boiling range.

Downloaded from Digital Engineering Library @ McGraw-Hill (www.digitalengineeringlibrary.com)
Copyright © 2004 The McGraw-Hill Companies. All rights reserved.
Any use is subject to the Terms of Use as given at the website.

UOP MEROX PROCESS

TABLE 11.3.3 Merox Process Economics

Product	Merox type	Est. capital, million $	Est. operating costs, cents/bbl
LPG	Extraction*	1.8	0.4
Gasoline	Minalk	0.9	0.3
	Caustic-free	0.9	2.5
Kerosene	Conventional fixed-bed	2.1	2.5
	Caustic-free	2.1	6.0

*Includes pretreating and posttreating facilities.

The Merox process has been thoroughly proved and well-established commercially. Its popular acceptance by the petroleum industry is based on its simplicity, efficiency, low capital and operation costs, and proven reliability. Many refiners have two or more Merox units. Even though the process is approaching 45 years of use, its technology is by no means stagnant, thanks to continuing research and development efforts to ensure an excellent outlook for this remarkably successful process.

Downloaded from Digital Engineering Library @ McGraw-Hill (www.digitalengineeringlibrary.com)
Copyright © 2004 The McGraw-Hill Companies. All rights reserved.
Any use is subject to the Terms of Use as given at the website.

Downloaded from Digital Engineering Library @ McGraw-Hill (www.digitalengineeringlibrary.com)
Copyright © 2004 The McGraw-Hill Companies. All rights reserved.
Any use is subject to the Terms of Use as given at the website.

Source: HANDBOOK OF PETROLEUM REFINING PROCESSES

CHAPTER 11.4

THE S ZORB SULFUR REMOVAL TECHNOLOGY APPLIED TO GASOLINE

David Legg and Jason Gislason
ConocoPhillips Petroleum Company
Bartlesville, Oklahoma

INTRODUCTION

The need for improving the environment has resulted in a continuing worldwide effort to produce cleaner-burning fuels. The reduction of sulfur in gasoline is considered to be a means for improving air quality because of the impact on performance of sulfur-sensitive items such as automotive catalytic converters. The presence of oxides of sulfur in automotive engine exhaust inhibits and may irreversibly poison noble metal catalysts in the converter. Emissions from an inefficient or poisoned converter contain levels of noncombusted, nonmethane hydrocarbons, oxides of nitrogen, and carbon monoxide. Such emissions are catalyzed by sunlight to form ground-level ozone, more commonly referred to as smog.

As the concern over the impact of automotive air pollution continues, it is clear that further effort to reduce the sulfur level in automotive fuels will be required. Governments around the world are moving to mandate lower allowable sulfur levels in transportation fuels. In the United States, the U.S. Environmental Protection Agency has promulgated regulations that require refiners to achieve an average pool target of 30 ppm sulfur in gasoline with phase-in beginning in 2004. In Canada, refiners will have to lower sulfur levels in two steps: The first was to 150-ppm level by the year 2002, and then down to 30-ppm level by the year 2005. In Europe, gasoline sulfur levels are required to be below 50 ppm by 2005 and to less than 10 ppm between 2005 and 2008.

In conjunction with the need to be able to produce low-sulfur-content gasoline, there is a need for a process that will not negatively impact the important properties of the gasoline. Any acceptable sulfur reduction process must have a minimal effect on the olefin content of the feed since saturation of olefins greatly affects the octane number (both research and motor octane number). Such adverse effect on the olefin content is generally due to the severe conditions normally employed, such as during hydrodesulfurization, to remove thiophenic compounds, which are some of the most difficult sulfur-containing compounds to remove from cracked gasoline. In addition, there is a need to avoid a system wherein the conditions are such that the aromatic content of the cracked gasoline is lost through satu-

Downloaded from Digital Engineering Library @ McGraw-Hill (www.digitalengineeringlibrary.com)
Copyright © 2004 The McGraw-Hill Companies. All rights reserved.
Any use is subject to the Terms of Use as given at the website.

THE S ZORB SULFUR REMOVAL TECHNOLOGY APPLIED TO GASOLINE

ration. ConocoPhillips Petroleum has developed such a process with its S Zorb sulfur removal technology (SRT), which is a commercialized, economically competitive process to remove sulfur from hydrocarbon streams.

TECHNOLOGY DEVELOPMENT

Affected as all other refiners by the new regulations, ConocoPhillips began searching early for the solution, but was unsatisfied with existing and developing technologies. During an intensive research and development effort initiated in early 1998, ConocoPhillips researchers, aided by extensive experience in the areas of sulfur chemistry, hydrotreating, olefin processes, and sorption, were successful in developing a superior process, S Zorb SRT. The S Zorb process can economically reduce the sulfur content of gasoline to ultralow levels with minimal octane loss, minimal hydrogen consumption, and near-zero volume loss. These results are obtained through the use of a novel sorbent that selectively removes sulfur from hydrocarbon molecules. In conjunction with the sorbent development, a reliable plant design was developed that allows continuous operation paralleling major refining units such as the fluidized catalytic cracker (FCC), thus reducing operation and maintenance costs.

To develop and prove the new technology within the time frame mandated by upcoming regulations, ConocoPhillips decided to fast-track the design and construction of the first commercial S Zorb SRT unit at its Borger, Texas, refinery. Implementation of the S Zorb technology at the Borger refinery was conducted by an integrated group, which included research and development, process operations, maintenance, safety, environmental, and construction teams. Through the application of creative engineering approaches, a clear focus on schedule and deliverables, and full support of upper management, the technology was moved from conceptual flow sheet to a fully operational plant in less than 18 months.

The vertical start-up (feed in to on-specification production within 72 hours) and high throughput of the S Zorb unit at the Borger refinery are testimony to the efficacy of the S Zorb sorbent and engineering design. Within 72 hours of unit start-up, product gasoline with only 10 ppm sulfur was produced, and within a week after start-up, the plant was processing full-range FCC naphtha at 110 percent of the design capacity. The plant continues to produce low-sulfur, full-range FCC naphtha with minimal octane loss exceeding the gasoline sulfur removal requirements for the Borger refinery (Fig. 11.4.1).

PROCESS

S Zorb SRT is not a modified hydrogenation technology. It uses a revolutionary new sorbent that operates in a fluidized-bed reactor (sorber), allowing optimal conditions to attain the required sulfur removal while minimizing undesired reactions and results. In the sorber, a stream of vaporized sulfur-containing feed and hydrogen is passed over the sorbent, yielding a low-sulfur product with little octane loss and no volume loss. The sorbent circulates between the sorber and a regeneration section with on-line regeneration, allowing for steady-state performance with very selective, deep sulfur removal and extended run lengths.

The ConocoPhillips S Zorb process is a continuous operation, with the sorbent moving between three vessels in a pseudocontinuous process (Fig. 11.4.2). Sulfur is chemically removed from the gasoline stream in the sorber and stored on the sorbent. The effluent stream from the sorber is a low-sulfur gasoline blendstock with minimal octane loss, minimal hydrogen consumption, and little to no volume loss (Tables 11.4.1 and 11.4.2). The sorbent is removed from the sorber in a continuous process and regenerated in an oxygen-containing atmosphere to produce sulfur dioxide, a small amount of carbon dioxide, and a fresh sorbent.

Downloaded from Digital Engineering Library @ McGraw-Hill (www.digitalengineeringlibrary.com)
Copyright © 2004 The McGraw-Hill Companies. All rights reserved.
Any use is subject to the Terms of Use as given at the website.

THE S ZORB SULFUR REMOVAL TECHNOLOGY APPLIED TO GASOLINE

FIGURE 11.4.1 First S Zorb SRT Gasoline Commercial Unit in Borger, Texas.

The sulfur dioxide produced in this process can be separated from this regenerator effluent stream in a number of ways depending on the configuration of the refinery. The primary benefit of the absorptive process is the elimination of hydrogen sulfide from the reactor. The lack of hydrogen sulfide allows the S Zorb process to remove as much as 99+ percent of the sulfur from a gasoline stream without the need for an additional reactor to remove mercaptans formed from olefin recombination.

After oxidative regeneration, the sorbent is transferred to a small holding vessel, where it is reduced by using a hydrogen stream that can have as little as 50 percent purity. The S Zorb sorbent reduction is highly invariant to reduction temperature and pressure. Therefore, the reduction vessel is primarily treated as a surge vessel and requires minimal oversight by the operators.

The S Zorb SRT process has many control parameters that allow for treating various streams and conditions by changing the operating conditions while controlling octane loss. A few of these parameters include adjustments in sorber temperature or pressure, sorbent circulation rate, and sorbent sulfur loading. One of the unique features of the S Zorb process is that selectivity toward sulfur removal increases with an increase in temperature, as shown in Fig. 11.4.3.

The result of this increased selectivity is improved octane retention at a given product stream sulfur level. Octane protection and olefin conversion are closely related for gasoline. Because of the decoupling of the olefin loss from sulfur removal activity, S Zorb SRT produces much higher-octane gasoline for a given sulfur level than hydrotreating, as shown in Fig. 11.4.4.

One key aspect to operation of the S Zorb unit is the ability to shut down the regeneration section of the unit for periods of time while the sorber continues to operate. This abil-

Downloaded from Digital Engineering Library @ McGraw-Hill (www.digitalengineeringlibrary.com)
Copyright © 2004 The McGraw-Hill Companies. All rights reserved.
Any use is subject to the Terms of Use as given at the website.

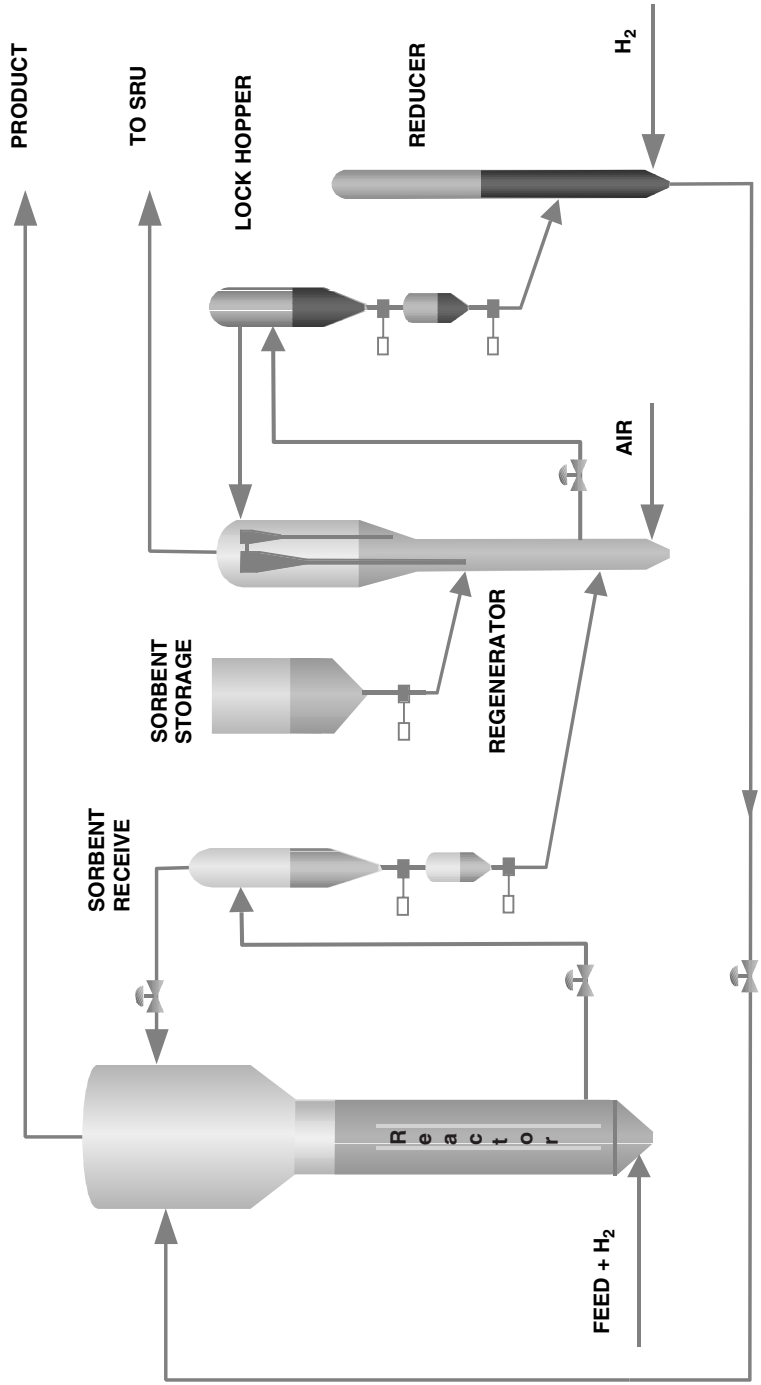

FIGURE 11.4.2 The S Zorb process.

Downloaded from Digital Engineering Library @ McGraw-Hill (www.digitalengineeringlibrary.com)
Copyright © 2004 The McGraw-Hill Companies. All rights reserved.
Any use is subject to the Terms of Use as given at the website.

THE S ZORB SULFUR REMOVAL TECHNOLOGY APPLIED TO GASOLINE

TABLE 11.4.1 General Operating Conditions for the Gasoline S Zorb Process

Reactor temperature	650–775°F (343–413°C)
Reactor pressure	100–300 lb/in^2 gauge (7.0–21.1 kg/cm^2)
Space velocity	4–10 WHSV
Hydrogen purity	>50%

TABLE 11.4.2 Example Case Studies Showing the Performance of S Zorb SRT When Processing Full-Range FCC Naphthas

Feed properties	Case 1	Case 2
Unit capacity, BPD	35,000	35,000
Sulfur, wt ppm	300	1500
Product properties		
Sulfur, wt ppm	10	10
Volume yield	>99.9%	>99.9%
RVP change	None	None
$(R + M)/2$ loss	<0.3	<1.0
Utilities		
Chemical hydrogen consumption, ft^3/bbl	25	70
Fuel, Btu/bbl	33,000	33,000
Electricity, kW/bbl	0.8	1.1
Cooling water, gal/bbl	115	115
Steam, MP, lb/bbl	12	12
Nitrogen, ft^3/bbl	4	16
Economics		
Capital cost (ISBL)	U.S. $1100/bbl	U.S. $1200/bbl
Operating cost*	0.9 cents/gal	1.2 cents/gal

*Includes utilities, 4 percent per year maintenance and sorbent costs.

ity to isolate the regeneration section of the unit gives operators the flexibility to perform maintenance on the unit without interrupting the production of low-sulfur gasoline.

As will be shown in the chemistry section, the S Zorb sorbent can be regenerated with no appreciable loss in sulfur removal activity or selectivity. Because of this unusual regenerative capacity, the sorber runs at start-of-run conditions, and there is no reason to remove sorbent from the unit to optimize unit activity, as done in other fluidized-bed processes, for example, in an FCC unit. The advantage of the sustained high activity is that the need for adding fresh sorbent is based only on losses due to attrition; therefore S Zorb SRT units are designed to minimize attrition. This is accomplished through minimization of lift velocities (which also explains the absence of any erosion issues), elimination of 90° bends in transfer lines, and specifically designed vessel internals. Due to these efforts and continuing improvements in sorbent characteristics, the attrition rate of the sorbent from the S Zorb SRT process is significantly lower than in other fluidized-bed processes, thereby reducing operating costs of the unit. The attrited fines produced from the unit are removed from the system between the regeneration and reduction steps in the process. At this point the fines produced are in the oxidative state and are essentially identical in composition to the fresh sorbent. The Environmental Protection Agency (EPA) has stated, "The

Downloaded from Digital Engineering Library @ McGraw-Hill (www.digitalengineeringlibrary.com)
Copyright © 2004 The McGraw-Hill Companies. All rights reserved.
Any use is subject to the Terms of Use as given at the website.

THE S ZORB SULFUR REMOVAL TECHNOLOGY APPLIED TO GASOLINE

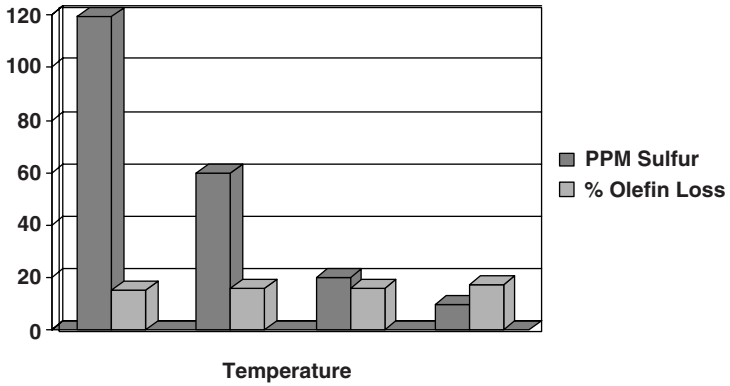

FIGURE 11.4.3 Temperature impact at constant conditions.

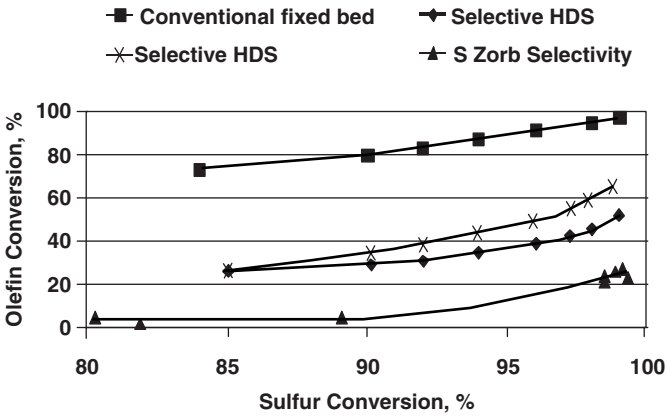

FIGURE 11.4.4 Olefin retention comparisons.

spent material does not appear to be characteristically hazardous or pyrophoric." Therefore, the EPA has ruled that the K171 regulations governing spent hydrotreating catalysts do not apply to the spent S Zorb sorbent. This ruling is very significant for the technology as it allows more options in the disposal of spent sorbent and a decrease in disposal costs of 98 percent, as it is considered a nonhazardous waste.

CHEMISTRY

For many years, sorbents that remove sulfur from streams have been reported in the literature. The S Zorb sorbent is unique in that the material does not just remove sulfur from hydrogen sulfide–containing streams, but also reacts with sulfur-containing hydrocarbon compounds forming a non–sulfur containing hydrocarbon. The sulfur is stored on the sor-

Downloaded from Digital Engineering Library @ McGraw-Hill (www.digitalengineeringlibrary.com)
Copyright © 2004 The McGraw-Hill Companies. All rights reserved.
Any use is subject to the Terms of Use as given at the website.

THE S ZORB SULFUR REMOVAL TECHNOLOGY APPLIED TO GASOLINE

bent for future removal from the system. The stored sulfur is released from the S Zorb sorbent as sulfur dioxide, when the sorbent is heated in the presence of oxygen.

An S Zorb Unit is comprised of three fluidized-bed reaction vessels: the reducer, sorber, and regenerator (Fig. 11.4.2). Fresh makeup sorbent is loaded into the process and mixed with regenerated sorbent directly downstream of the regenerator. The oxidized sorbent, whether it has been previously loaded with sulfur or not, is transported to the reducer, where it is contacted and reacted with hydrogen gas, forming the active sorbent. The S Zorb process is unique in that the sorbent can be regenerated without a significant loss in activity or selectivity.

After reduction, the sorbent is transferred to the sorber, where it is contacted with a mixed stream of hydrogen and vaporized sulfur-containing hydrocarbon molecules. Three reactions occur during this absorption step. First, the sulfur-containing hydrocarbon molecules undergo hydrogenolysis, cleaving the sulfur from the hydrocarbon molecule. Second, the cleaved sulfur is stored on the sorbent. Concurrently with the sulfur removal reactions, some of the unsaturated hydrocarbon molecules are hydrogenated to saturated hydrocarbon molecules. Unlike hydrotreating technologies, the hydrogenation of non–sulfur containing molecules by the S Zorb sorbent is minimal, which allows for the retention of the high road and motor octane numbers of the feed stream.

$$C_nH_{2n} + H_2 + \text{sorbent} \Rightarrow C_nH_{2n+2} + \text{sorbent} \tag{11.4.1}$$

$$C_nH_{2n+2}S + \text{sorbent} \Rightarrow C_nH_{2n+2} + \text{sulfur} + \text{sorbent} \tag{11.4.2}$$

$$\text{Sorbent} + \text{sulfur} \Rightarrow \text{sulfur-containing sorbent} \tag{11.4.3}$$

After the sorbent is loaded with sulfur in the sorber, it is transported to the regenerator system. In the regenerator, the sulfur-loaded sorbent is contacted with an oxygen-containing stream. The regeneration process produces two reactions. The first reaction results in the burning of the sulfur-containing sorbent to a sulfur-free sorbent and sulfur dioxide. The second reaction burns any trace carbonaceous material to carbon dioxide, carbon monoxide, and water.

$$\text{Sulfur-containing sorbent} + O_2 \Rightarrow \text{sulfur-free sorbent} + SO_2 \tag{11.4.4}$$

$$C_xH_y + O_2 \Rightarrow CO_2 + H_2O + CO \tag{11.4.5}$$

The sulfur dioxide formed during regeneration is removed from the sorber and transported to a sulfur recovery unit. The sorbent is then reactivated and reintroduced to the process.

The S Zorb sorbent is significantly more insensitive to poisons than typical hydrotreating catalysts. This insensitivity is due to the S Zorb sorbent being composed of mostly active components and not inert support. A poisoning event, if it does occur, can be minimized with the ability to add fresh sorbent while continuing to run. This is a significant advantage over fixed-bed systems, which must be shut down to change out catalyst.

PROCESS ECONOMICS AND OPERATIONAL FLEXIBILITY

The production of low-sulfur gasoline is a requirement refineries must meet to continue operation; however, the technology solution for each refiner is based on maximizing the specific economics. These economics are influenced by the unique configuration of the overall refinery process, utility values, blending capabilities, feedstock availability, and market conditions. The chemical mechanisms of the sorbent and the flexibility of the process are what drive the associated economic benefits of S Zorb SRT over other available technologies.

Downloaded from Digital Engineering Library @ McGraw-Hill (www.digitalengineeringlibrary.com)
Copyright © 2004 The McGraw-Hill Companies. All rights reserved.
Any use is subject to the Terms of Use as given at the website.

THE S ZORB SULFUR REMOVAL TECHNOLOGY APPLIED TO GASOLINE

The retention of valuable stream properties due to the sorbtion mechanisms of the sorbent is a key economic advantage of S Zorb SRT. The selectivity of the process of removing sulfur with minimal saturation of olefins allows for the maximum in octane retention. Since the process does not result in cracking any of the feed hydrocarbons, vapor pressure is unchanged and the volume of blending product across the absorber is retained. The retention of the maximum amount of "octane-barrels" and not increasing vapor pressure are critical to the refiners' gasoline blending economics. With less olefins saturated, the demand for chemical hydrogen is reduced, which is also highly valued by refiners and is quite often of limited supply. By reducing the amount of hydrogen required, operating costs are reduced and in cases where supply is extremely limited, capital costs of adding hydrogen production can also be avoided.

Flexibility in the process is inherent in the basic design. The fluidized bed and continuous regeneration allow maximum run lengths, continuous start-of-run conditions, and recovery from poisons in the feed. They also allow the refiner feed and product flexibility to adjust to variances in feed composition and/or product target properties. When the unit is designed, it is sized for a particular feed volume and worst-case feed sulfur level. However, the ultimate sulfur removal achieved can be set at the discretion of the individual refiner, providing flexibility in handling feedstocks with different sulfur concentrations or other properties. It also gives the refiner the ability to adjust product sulfur levels, should economics or future regulations dictate that is necessary.

As previously mentioned, since H_2S is not produced in the S Zorb process, the problem of H_2S recombination reactions is avoided. These recombination reactions can prevent other technologies from achieving low sulfur levels without the addition of H_2S scrubbing equipment and an additional finishing reactor, both of which increase capital costs. This is one of the key features that allows the S Zorb process to economically produce the very low product sulfur levels needed to meet the clean fuel demands of today and beyond.

Another significant advantage over existing desulfurization technologies is the ability of the S Zorb SRT process to match the run lengths of the fluidized catalytic cracker (FCC). The S Zorb SRT process operates in a similar manner to the FCC in that sorbent is continuously removed from the process. Therefore, the unit avoids the need to be shut down for turnarounds due to bed compaction, attrition, or fouling as seen in hydrotreating units. With a sulfur limit for produced gasoline and minimal inventory storage available at the refinery, it will be impossible to produce gasoline during downtime of the sulfur removal process. This is avoided with the S Zorb SRT process by allowing maintenance turnarounds to be coupled with scheduled shutdowns of the FCC unit. Therefore, the S Zorb SRT unit will not limit the ability of the refinery to produce on-specification gasoline.

CONCLUSION

With a multitude of sites licensed around the world in addition to the ConocoPhillips units in operation, design, or construction, the S Zorb SRT is a viable commercialized technology for the removal of sulfur from gasoline. Benefits realized by using the S Zorb SRT process relate to the basics of the technology. Sulfur is removed to ultralow levels with minimal effect on the process stream. A continuously regenerated fluidized bed, coupled with the ability to add fresh sorbent and remove fines during operation, allows for steady-state start-of-run conditions in the sorber for extended run lengths. Coking, hot spots, channeling, and permanent poisoning of catalyst—all extremely detrimental occurrences associated with traditional fixed-bed systems—are minimized. The high degree of selectivity during sulfur removal decreases hydrogen consumption, because the excessive amount of olefin saturation typical of other technologies does not take place. With this olefin retention and absence of cracking reactions, the ever more valuable octane-barrel is retained.

Downloaded from Digital Engineering Library @ McGraw-Hill (www.digitalengineeringlibrary.com)
Copyright © 2004 The McGraw-Hill Companies. All rights reserved.
Any use is subject to the Terms of Use as given at the website.

Source: HANDBOOK OF PETROLEUM REFINING PROCESSES

CHAPTER 11.5
CONOCOPHILLIPS S ZORB DIESEL PROCESS

Ed Sughrue and John S. Parsons
ConocoPhillips Fuels Technology
Bartlesville, Oklahoma

INTRODUCTION

The S Zorb sulfur removal technology (SRT) diesel process removes sulfur from distillates to meet the new diesel fuel regulatory requirements around the world. Environmental concerns initiated the S Zorb concept over 20 years ago with sulfur removal from furnace exhaust. During the last several years, the S Zorb-Gasoline process for producing ultralow-sulfur gasoline has been commercialized. Today ultralow-sulfur and "zero"-sulfur diesels are being mandated in order to allow auto manufacturers to meet the emissions standards. Advanced engine emission control technologies, in the forms of particulate matter (PM) traps and NO_x adsorbers, are much less effective with high-sulfur fuel because of catalyst poisoning. To ease the impact of these regulations on the refining industry, ConocoPhillips has developed a unique and selective sulfur removal technology that applies to current on-road diesel blends and other higher-sulfur, distillate-range blendstocks. Key advantages offered by the S Zorb SRT diesel process are very low hydrogen consumption, high product yields (>99.5 percent), and the preservation of the fuel properties such as lubricity.

CHEMISTRY

Sulfur removal in the S Zorb process is influenced by a number of feedstock properties such as boiling point range, nitrogen content, and most importantly the sulfur content. The amount of sulfur and its distribution among different organic molecules vary significantly between different types of diesel feedstocks. In Fig. 11.5.1, the concentration of sulfur is plotted against boiling point (in degrees Celsius) for diesel fuels and blendstocks from different sources. The vertical line on the plots is at 315°C. Below this temperature, the sulfur molecules are primarily benzothiophenes, dibenzothiophenes, and methyldibenzothiophenes which have generally high removal rates. Above 315°C the peaks represent the higher-boiling-point dimethyldibenzothiophenes which are the most difficult to remove sulfur compounds. The plot for straight-run diesels shows that two of the straight-run

Downloaded from Digital Engineering Library @ McGraw-Hill (www.digitalengineeringlibrary.com)
Copyright © 2004 The McGraw-Hill Companies. All rights reserved.
Any use is subject to the Terms of Use as given at the website.

CONOCOPHILLIPS S ZORB DIESEL PROCESS

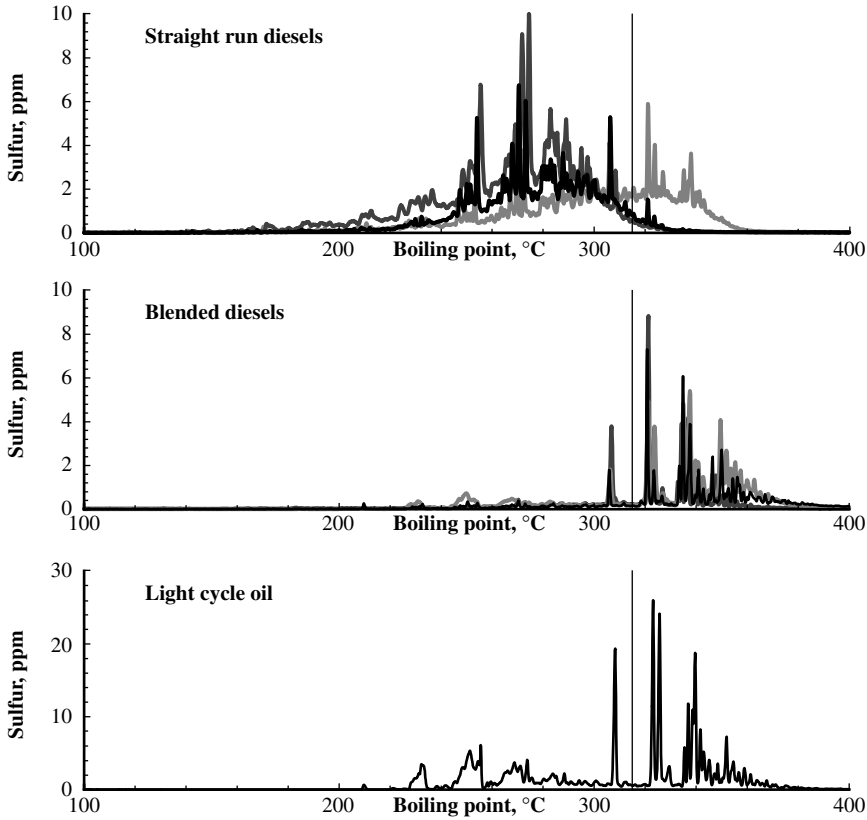

FIGURE 11.5.1 Sulfur chromatograms of distillate-range hydrocarbons.

diesel feeds have very similar sulfur distributions with high concentrations of lower-boiling sulfur compounds, while the third diesel contains significant amounts of the higher-boiling sulfur compounds. The third diesel is significantly more difficult to desulfurize. The blended diesels represent current on-road diesel fuels. The total sulfur concentration is lower, but previous hydroprocessing has removed all but the higher-boiling sulfur compounds. A similar sulfur distribution is seen in a light cycle oil, where the majority of the sulfur is again in the higher-boiling fraction even though this light cycle had not been previously hydrotreated. All the diesel feedstock with high concentrations of sulfur above the 315°C line has been shown to require more severe process conditions to produce ultralow-sulfur products.

In S Zorb technology, sulfur removal occurs when the entire organic sulfur molecule sorbs onto the S Zorb particle surface in a mechanism similar to hydrodesulfurization. The sulfur atom is then separated from the remainder of the organic molecule, which is released into the bulk fluid. In standard hydrodesulfurization, the absorbed sulfur is reduced to form H_2S gas. Also, there is significant hydrogenation of aromatic rings. In S Zorb, the sulfur atom remains bound to the sorbent as a metal sulfide. No H_2S is observed in the product, and hydrogenation of aromatic rings is not significant. Consumption of hydrogen is minimal. The production of light hydrocarbons is also extremely low. This produces diesel-range product yields greater than 99.5 percent. The S Zorb chemistry gen-

Downloaded from Digital Engineering Library @ McGraw-Hill (www.digitalengineeringlibrary.com)
Copyright © 2004 The McGraw-Hill Companies. All rights reserved.
Any use is subject to the Terms of Use as given at the website.

CONOCOPHILLIPS S ZORB DIESEL PROCESS

erates a product that has virtually the same properties as the feed. As shown in Table 11.5.1, even at very low product sulfur levels, there are no significant changes in specific gravity, distillation boiling curve, cetane number, cetane index, ASTM color, cloud point, and pour point. There is also virtually no impact on lubricity, unlike in traditionally hydrodesulfurized diesel products.

SORBENT

The S Zorb sorbent is composed of base metals commonly used in conventional refining catalysts. It contains no noble metals. The S Zorb sorbent has a significantly higher active site density than typical HDS catalysts. The higher active site density produces a material that has significantly higher sulfur removal rates and less sensitivity to poisons such as silica and chlorides. Both pilot-plant and commercial data indicate little or no loss in activity even after several hundred regeneration cycles. The sorbent particle size averages 50 to 60 μm and is produced by a spray-drying process similar to the process used to manufacture catalytic cracking catalysts. These small, fluidizable particles have higher external surface areas than conventional 1/16-inch extrudate and exhibit no intraparticle transport limitations. Much effort in the sorbent development process has focused on the production of an attrition-resistant material, commercial manufacturability, and composition optimization. ConocoPhillips licenses certified catalyst vendors to manufacture and market the sorbent in commercial quantities.

PROCESS DESCRIPTION

The process scheme for the S Zorb SRT diesel process is similar to that for a low-pressure hydrodesulfurization process with the exception that a fluidized-bed reactor having continuous regeneration replaces the fixed-bed HDS reactor. Hydrocarbon is fed to a charge

TABLE 11.5.1 Feed and Product Properties of S Zorb-Treated Diesel

Property	Feed	Product
Sulfur, wt ppm	523	6
API gravity	33.20	33.22
Hydrogen, wt %	12.72	12.72
Cetane number	43.5	43.5
Cetane index	44.4	44.4
D86 distillation		
IBP	385°F	380°F
10	440°F	438°F
50	513°F	513°F
90	604°F	603°F
ASTM color	0.5	0.5
Cloud point	−10.6°F	−10.6°F
Pour point	−13.5°F	−13.5°F
Lubricity		
SLBOCLE	3700	3600
HFRR	385	315

Downloaded from Digital Engineering Library @ McGraw-Hill (www.digitalengineeringlibrary.com)
Copyright © 2004 The McGraw-Hill Companies. All rights reserved.
Any use is subject to the Terms of Use as given at the website.

CONOCOPHILLIPS S ZORB DIESEL PROCESS

pump and is then mixed with the recycle hydrogen stream containing a small amount of makeup hydrogen. After hydrogen addition, the combined stream is passed through a feed-effluent heat exchanger for vaporization and then to a fired heater to achieve the desired feed temperature. The vaporized feed is sent to the bottom of the reactor vessel containing a fluidized bed of the S Zorb sorbent. After passing through the sorbent bed, the hydrocarbon stream exits the top of the vessel through fines filters that remove any entrained sorbent. The desulfurized hydrocarbon product exits the reactor and proceeds through a series of heat recovery and cooling steps before entering the product separator for vapor/liquid separation. The vapor from the product separator is sent to the recycle compressor. Liquid from the product separator is passed through heat recovery and then fed to the stabilizer where light material, mainly hydrogen, is stripped out of the liquid product. The bottoms product from the stabilizer is cooled and sent to product blending.

The regeneration system begins with sorbent from the reactor section draining through the reactor receiver and lock hopper system. It is then pneumatically transferred to the regenerator vessel. From there the sorbent passes through the regeneration process. Next, it drains through a regenerator receiver and lock hopper system to a reducer where hydrogen reactivates the promoter metals. Finally the sorbent is reintroduced to the reactor, completing the circuit. The regeneration section is designed to maintain sorbent integrity and to operate safely and efficiently in all situations. The oxygen content of the regeneration gas going to the regenerator is limited to control the temperature rise in the regenerator. The regeneration offgas consists primarily of nitrogen, carbon dioxide and sulfur dioxide. In most unit configurations, it is cleaned of SO_2 and returned to the regenerator as diluent.

The SO_2 produced in the S Zorb process can be handled in several different ways. The most common include scrubbing, concentration for disposal, and elemental sulfur production. Scrubbing is performed in a traditional spray or packed tower. Caustic or ammonia can be circulated to react the SO_2 out of the gas stream. The reaction products are then disposed of in the wastewater system, sent for off-site disposal or, in the case of ammonia, sold as a product. SO_2 can be concentrated by using circulating solvent loops in a traditional contactor / regenerator configuration. The solvents are either complex buffer solutions or proprietary selective amines. The concentrated SO_2 can then be sent to the refinery Claus unit, flue gas scrubber, or other appropriate location. Elemental sulfur can be produced at the unit by using a number of different process schemes that take advantage of the Claus reaction.

Sorbent fines are generated through natural attrition. They are captured by filters in the regenerator offgas stream and exit the process in a harmless, oxidized state. The fines are collected in a vessel and stored for recycling or disposal. In a recent determination by the EPA, the material was found to not meet the Resource Conservation Recovery Act (RCRA) definition of K-171 classified waste. This allows for disposal that is dependent only on toxicity characteristics and local regulations versus being automatically classified as hazardous. Based on this analysis, the material is currently being handled as nonhazardous industrial waste with less liability and expense. A small amount of water from reduction is also produced from the process. It, along with any water from the feed, exits the process from the product separator or stabilizer overhead accumulator. This water is free of hydrogen sulfide but contains some ammonia and minor amounts of dissolved hydrocarbons.

The S Zorb-Diesel process can be placed in the refinery in several different ways. A refinery that is currently producing all on-road, 500 wt ppm diesel could build a unit that treated the entire volume to ULSD quality. Another configuration is to treat a blend of 500 wt ppm on-road diesel and higher-sulfur off-road diesel. This would allow the refiner to increase the total volume of on-road quality diesel available for sale. Finally, a refiner could opt to treat any one of a number of diesel pool individual blend components. In combination with the first two cases, a refiner could consider decreasing the severity of upstream desulfurization units to save utilities and increase current unit cycle length as part of an overall optimization.

Downloaded from Digital Engineering Library @ McGraw-Hill (www.digitalengineeringlibrary.com)
Copyright © 2004 The McGraw-Hill Companies. All rights reserved.
Any use is subject to the Terms of Use as given at the website.

CONOCOPHILLIPS S ZORB DIESEL PROCESS

Operating Variables

The unique nature of the ConocoPhillips S Zorb sulfur removal technology allows circumvention of several operating limitations that exist with conventional diesel hydrodesulfurization technologies. With continuous regeneration and a different sulfur removal mechanism, the S Zorb process can be operated at higher temperatures and more moderate pressures than conventional hydrotreaters. This allows the S Zorb process for distillates to operate at or near hydrogenation equilibrium conditions, which translates to minimal and, in many cases, zero net chemical hydrogen consumption. Typical operating conditions are

Pressure	350–500 lb/in^2 gauge
Temperature	725–775°F
WHSV	1–6 per hour

In the fluid-bed process, the reactor operates at constant conditions with no need to raise temperature to compensate for a loss in catalyst activity. There are no start-of-run and end-of-run operating conditions and yield differences. Unit shutdowns and turnarounds to replace sorbent are not needed. Instead, the reactor is operated at constant temperatures generally between 700 and 800°F. Combining higher temperatures, smaller sorbent particles, and the sorbent's higher active site density, sulfur removal rates are significantly higher than conventional hydrodesulfurization reaction rates. This allows the S Zorb process to operate at moderate pressures of 500 lb/in^2 gauge or less and still produce very low product sulfur levels.

The S Zorb sorbent is designed to minimize hydrogenation activity, however. The higher reaction temperatures and lower pressures also aid to limit hydrogenation of aromatic molecules. Figure 11.5.2 shows the chemical hydrogen consumption for a blended diesel containing 500 wt ppm sulfur. The chemical hydrogen consumption decreases with increasing temperature while sulfur levels are below 10 wt ppm over the entire temperature range. Over most of the temperature range, the chemical hydrogen consumption is actually negative (hydrogen is being produced).

As the sorbent accumulates sulfur, its activity for sulfur removal decreases and regeneration is required to restore activity. For S Zorb, only 1 lb of sorbent is regenerated for every 40 to 200 lb of feed versus a catalytic cracker where 5 to 7 lb of catalyst is regenerated for every 1 lb of feed.

The S Zorb regenerator is several orders of magnitude smaller than regenerators for catalytic cracking. The regeneration of the sorbent occurs in a separate vessel where temperatures are near 1000°F. The metal sulfides are converted to metal oxides, and SO_2 is released. The sorbent from the reactor usually contains a small amount of carbon which produces carbon dioxide. Before the sorbent is returned to the reactor, it spends a short time in a reducing atmosphere near 700°F to reactivate the metals.

PROCESS ECONOMICS

Table 11.5.2 is a summary of the capital and operating cost requirements for the S Zorb Process. The utilities and unit cost are a function of both the total amount of sulfur in the feed and the types of sulfur compounds. Case B is a current on-road diesel with low-sulfur and moderately hard sulfur species. Case A is higher in sulfur with the full spectrum of sulfur species.

Downloaded from Digital Engineering Library @ McGraw-Hill (www.digitalengineeringlibrary.com)
Copyright © 2004 The McGraw-Hill Companies. All rights reserved.
Any use is subject to the Terms of Use as given at the website.

CONOCOPHILLIPS S ZORB DIESEL PROCESS

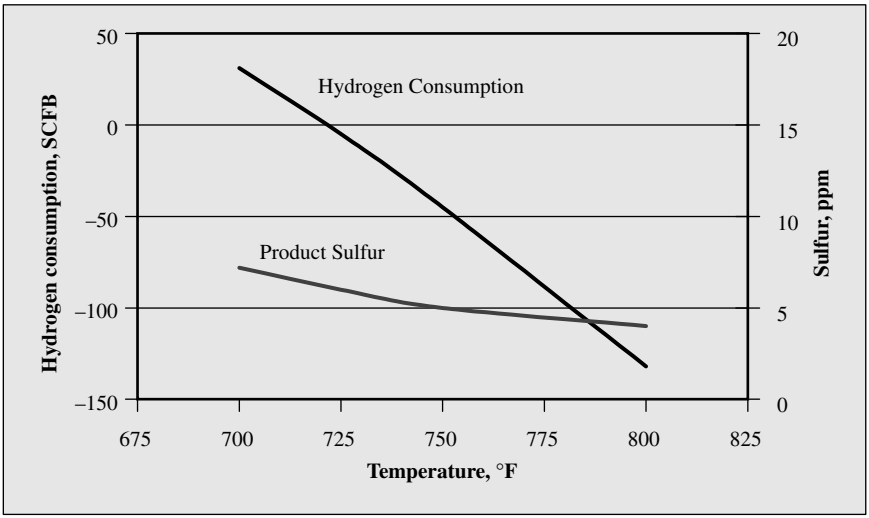

FIGURE 11.5.2 Chemical hydrogen consumption and product sulfur versus reactor temperature.

TABLE 11.5.2 S Zorb Process Requirements

	Case A	Case B
Feed rate, BPD	20,000	40,000
Feed sulfur, wt ppm	2600	500
Product sulfur, wt ppm	6	6
Power, kWh	2511	3698
Steam	Tracing only	Tracing only
Nitrogen, million SCFD	807	332
Cooling H_2O, gal/min	1835	1870
Fuel gas, million Btu/h	46.5	109.6
Total hydrogen, million SCFD	1.24	1.44
Sorbent makeup, lb/mo	9970	19,085
Erected equipment, million $	20.85	30.60

COMMERCIAL EXPERIENCE AND FUTURE PLANS

The commercial S Zorb gasoline unit in operation at the ConocoPhillips Borger, Texas, refinery has shown great flexibility for operation over a wide range of feedstock and process conditions. By operating this unit at up to 7500-BPSD feed rate and over 1400 wt ppm sulfur in feed, versus design conditions of 6000-BPSD feed rate and 1000 wt ppm sulfur, we have been able to evaluate and optimize S Zorb process operating conditions to reach sulfur levels under 15 wt ppm in the product with minimal octane loss and near-zero production of light gases. The mechanical design and operation of a diesel unit are very similar to those of the commercial gasoline unit.

Since January 2002, a diesel pilot plant at the ConocoPhillips Bartlesville Technology Center in Bartlesville, Oklahoma, has been operating continuously. The pilot plant with a 2- to 4-BPD capacity contains all the major vessels that will be used in a commercial unit design.

Downloaded from Digital Engineering Library @ McGraw-Hill (www.digitalengineeringlibrary.com)
Copyright © 2004 The McGraw-Hill Companies. All rights reserved.
Any use is subject to the Terms of Use as given at the website.

Source: HANDBOOK OF PETROLEUM REFINING PROCESSES

CHAPTER 11.6
GASOLINE DESULFURIZATION

Douglas A. Nafis and Edward J. Houde
UOP LLC
Des Plaines, Illinois

INTRODUCTION

Both government and private industries are actively involved in the search for less polluting or nonpolluting alternatives to the conventional hydrocarbon-fueled internal combustion engine. Unfortunately, issues regarding the economics, infrastructure requirements, and consumer acceptance of these alternatives suggest that for the foreseeable future, automobiles will continue to rely on the internal combustion engine as their primary power source. To reduce automobile emission levels, governments have begun to implement fuel reformulation and emission limits. Automobile manufacturers, meanwhile, argue that current gasoline quality is inadequate for the advanced engine and catalytic converter designs required to meet the new emission standards, citing sulfur as the major deterrent to their ability to further reduce engine emissions.

Governments have responded to these issues by legislating that refiners produce low- and ultralow-sulfur gasoline. A survey of U.S. refiners conducted in the mid-1990s indicated the average refinery gasoline pool contained approximately 350 wt ppm sulfur.[1] By January 2005, U.S. tier II regulations will establish a maximum standard gasoline sulfur content of 30 wt ppm—a more than 90 percent reduction in gasoline sulfur content. Geographic phase-in has been provided for U.S. refiners located in PADD IV (Colorado, Idaho, Montana, and Utah) where, because of the large number of small refineries, 300 wt ppm sulfur gasoline will be allowed during 2004 to 2006, with an 80 wt ppm cap being implemented by 2006.

As Fig. 11.6.1 indicates, although the timing may vary, other countries around the world are also imposing gasoline sulfur limits. In Europe, a 150 wt ppm gasoline sulfur specification has been enacted as an intermediate step prior to the implementation of a 50 wt ppm limit by 2005. Other European countries including the United Kingdom and Germany have introduced tax incentives for the production of 50 wt ppm sulfur gasoline, with Germany also intending to introduce incentives for 10 wt ppm sulfur gasoline in 2003. In addition, Japan will implement a 50 wt ppm gasoline sulfur specification in 2005, with the potential for a further reduction to 10 wt ppm by 2008. This legislation will require refiners to make numerous technical and economic decisions. For the decision process to be most effective, refiners must become familiar with the various methods for reducing gasoline sulfur content, the variety of gasoline desulfurization technologies that

Downloaded from Digital Engineering Library @ McGraw-Hill (www.digitalengineeringlibrary.com)
Copyright © 2004 The McGraw-Hill Companies. All rights reserved.
Any use is subject to the Terms of Use as given at the website.

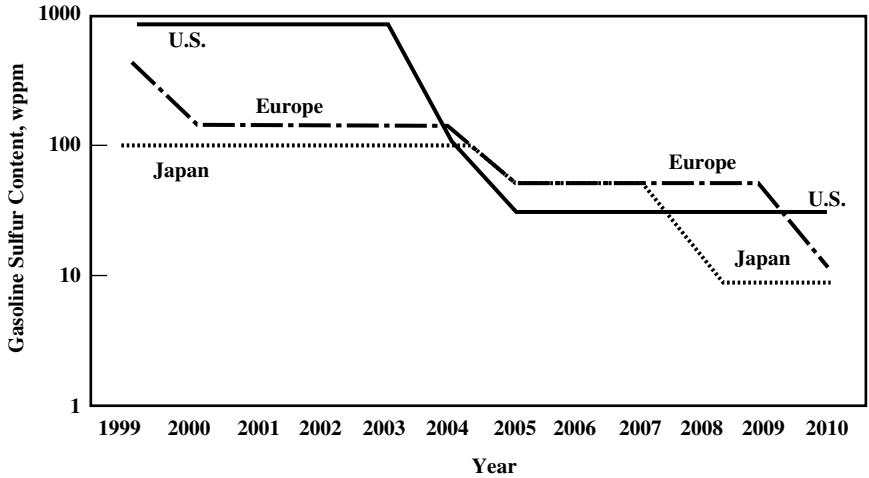

FIGURE 11.6.1 Gasoline sulfur limits.

are available, and the often subtle differences between them. The first step in this process involves a review of the origins of the sulfur present in gasoline.

WHY FCC NAPHTHA?

Most refinery gasoline desulfurization strategies have focused on the FCC naphtha component of the refinery gasoline pool. As illustrated in Fig. 11.6.2, a survey of U.S. refiners conducted in the mid-1990s identified FCC naphtha as the largest single contributor of sulfur to the gasoline pool, accounting for more than 90 percent of the pool's total sulfur content.[1] This survey also provided insight into the magnitude of the effort that would be required to meet lower gasoline sulfur targets since, as indicated in Fig.11.6.3, FCC naphtha was shown to represent almost 40 percent of the typical refinery gasoline pool. For these reasons, any strategy for reducing gasoline sulfur content clearly must focus on desulfurizing the FCC naphtha component of the gasoline pool.

An effective gasoline desulfurization strategy should begin with an examination of the general features of FCC naphtha. Table 11.6.1 provides a summary of the properties of several commercially produced FCC naphtha samples, representing a wide range of FCC feedstock quality and FCC operating severity. The FCC naphtha's molecular structure, as represented by its GC-PIONA analysis, and the types and amounts of sulfur within FCC naphtha can vary significantly. Closer inspection of Table 11.6.1 indicates the sulfur distribution in FCC naphtha is also not uniform. Rather, as Fig. 11.6.4 illustrates, the majority of the sulfur is contained in the naphtha's heavier fraction. In addition, the types of sulfur compounds and their distribution within the FCC naphtha vary with boiling range. The naphtha's light fraction contains predominantly mercaptan-type sulfur, while the naphtha's intermediate-range fraction contains primarily thiophenic-type sulfur and its heavy fraction contains mostly benzothiophenic-type sulfur compounds.

Figure 11.6.5 also highlights another unique feature of FCC naphtha. The two major components that influence the naphtha's octane—olefins and aromatics—are not evenly distributed. Rather, similar to sulfur, the naphtha's aromatic components are concentrated

Downloaded from Digital Engineering Library @ McGraw-Hill (www.digitalengineeringlibrary.com)
Copyright © 2004 The McGraw-Hill Companies. All rights reserved.
Any use is subject to the Terms of Use as given at the website.

GASOLINE DESULFURIZATION

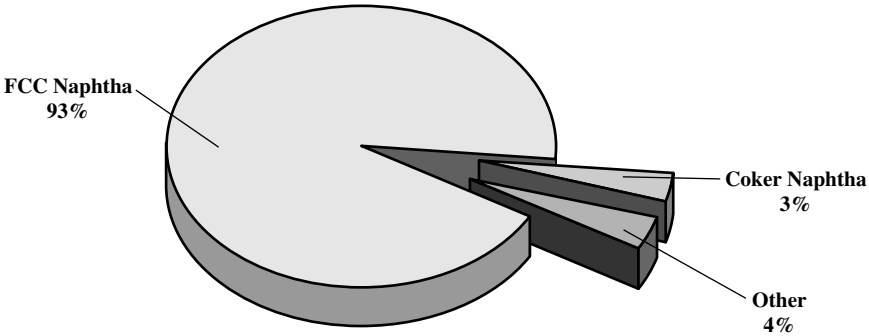

FIGURE 11.6.2 Sulfur sources in U.S. gasoline pool.

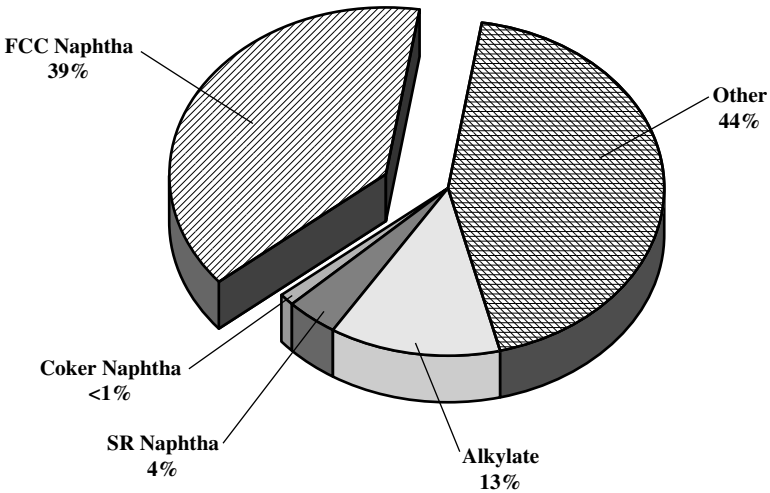

FIGURE 11.6.3 U.S. gasoline pool composition.

in its heavy fraction, while the lighter naphtha contains primarily olefinic compounds. As a result of the octane differences between these components, and their distribution within the FCC naphtha, the Road octane of the intermediate fraction of FCC naphtha typically is lower than that of either the naphtha's light or heavy fractions.

REDUCING THE SULFUR CONTENT OF FCC NAPHTHA

Before new processing units are added, other options for reducing the sulfur content of the FCC naphtha should be considered. For example, FCC manufacturers have claimed the ability to reduce the sulfur content of FCC naphtha by 20 to 30 percent.[2] These additives tend to reduce the amount of thiophenes and alkylthiophenes in the FCC naphtha,

Downloaded from Digital Engineering Library @ McGraw-Hill (www.digitalengineeringlibrary.com)
Copyright © 2004 The McGraw-Hill Companies. All rights reserved.
Any use is subject to the Terms of Use as given at the website.

GASOLINE DESULFURIZATION

TABLE 11.6.1 Properties of Commercial FCC Naphtha

	FCC gasoline sample							
	A	B	C	D	E	F	G	H
API gravity	57.0	42.4	58.0	49.6	57.6	58.1	54.3	53.6
Boiling range, D2887								
IBP, °F	38	127	35	120	28	50	41	55
50%, °F	231	287	232	264	219	224	253	230
EP, °F	447	476	465	402	475	471	477	484
PIONA types, wt %								
n-Paraffins	3.1	2.2	4.9	3.2	7.0	4.5	3.5	5.5
iso-Paraffins	22.1	12.5	21.0	19.4	31.1	24.2	21.8	17.4
Naphthenes	10.4	10.6	8.0	10.4	9.5	7.8	6.5	7.6
Olefins	33.8	15.4	33.0	26.3	19.3	30.1	30.3	28.5
Aromatics	26.8	56.7	32.0	39.7	31.2	32.1	34.4	38.9
C_{12}+ nonaromatics	3.8	2.6	1.1	1.0	1.9	1.3	3.5	2.1
	100.0	100.0	100.0	100.0	100.0	100.0	100.0	100.0
Sulfur types, wt ppm, D5623								
Mercaptans	0	1	57	17	29	84	30	257
Thiophene	31	12	29	73	51	64	71	61
Subst. thiophenes	305	331	217	885	468	599	701	3498
Benzothiophene	61	43	128	43	223	251	463	30
Subst. benzothiophenes	82	147	312	40	654	628	1559	244
Sulfides, disulfides	2	0	2	7	3	4	2	30
Other sulfur	8	0	0	39	0	36	242	235
Total sulfur	489	534	745	1104	1428	1666	3068	4355

while having little effect on the heavier benzothiophenes and alkylbenzothiophenes which are typically very stable at FCC operating conditions.

Adjusting the FCC unit's operating severity or its catalyst activity can also affect the quality of the resulting FCC naphtha. As Fig. 11.6.6 illustrates, increased FCC operating severity alters the naphtha's molecular distribution, converting more of the heavier olefins and producing an FCC naphtha with a lower overall olefin content. LPG production will increase at the higher operating severity, while the yields of gasoline, light cycle oil (LCO), and clarified oil will decline. Assuming the unit's gas concentration section can process the additional LPG, higher severity provides an attractive route to increased alkylate or poly gas production, offsetting MTBE removal and improving the gasoline's driveability index. Finally, as a result of additional aromatic and *iso*-alkane production, the FCC naphtha octane will increase at the higher operating severity, although the sulfur content of the FCC naphtha will also increase as a result of increased LCO conversion.

Reducing the endpoint of the FCC naphtha will also lower its sulfur content. For example, lowering the naphtha's endpoint by 50°F (from 430 to 380°F) can reduce the sulfur content of an FCC naphtha by as much as 40 percent while also reducing its aromatic content by up to 25 percent. Unfortunately, this approach tends to have a negative impact on refinery economics since both the yield of gasoline and the octane of the gasoline decline, being replaced by increased production of lower-valued diesel (LCO) product.

Generally, the levels of sulfur reduction that can be achieved by the above techniques will not be sufficient to meet the new, ultralow-sulfur gasoline specifications that are being legislated. Consequently, although these methods may play a role in a refiner's overall sulfur reduction strategy, additional sulfur reduction techniques will typically also be required. Technology licensors have responded to this need by developing a wide range of

Downloaded from Digital Engineering Library @ McGraw-Hill (www.digitalengineeringlibrary.com)
Copyright © 2004 The McGraw-Hill Companies. All rights reserved.
Any use is subject to the Terms of Use as given at the website.

GASOLINE DESULFURIZATION

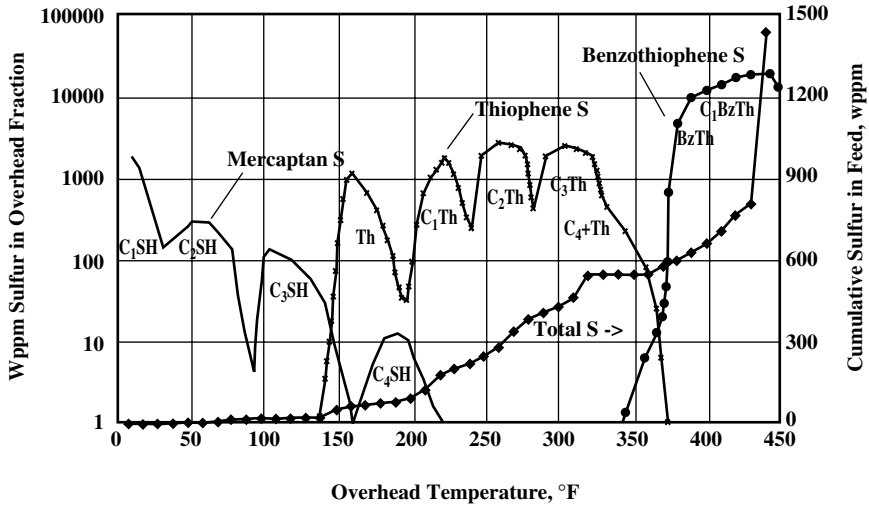

FIGURE 11.6.4 Sulfur in FCC naphtha.

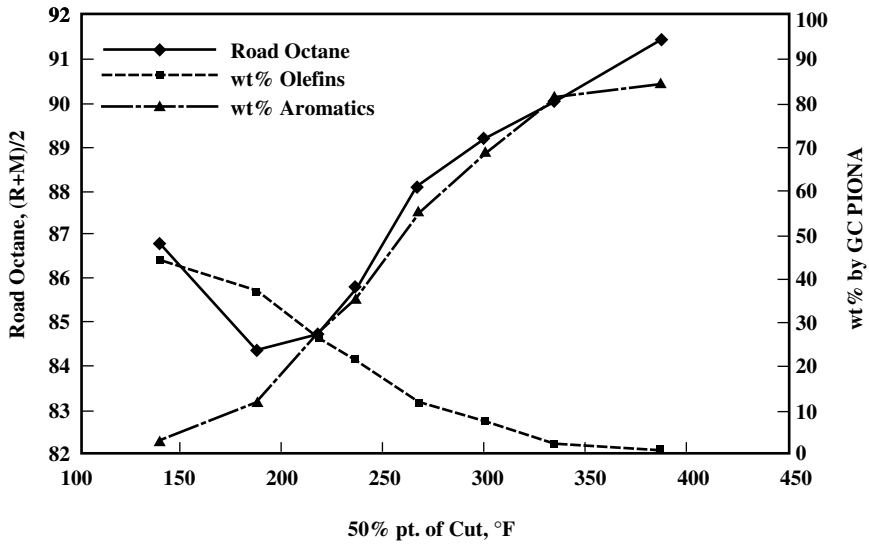

FIGURE 11.6.5 FCC naphtha octane distribution.

Downloaded from Digital Engineering Library @ McGraw-Hill (www.digitalengineeringlibrary.com)
Copyright © 2004 The McGraw-Hill Companies. All rights reserved.
Any use is subject to the Terms of Use as given at the website.

GASOLINE DESULFURIZATION

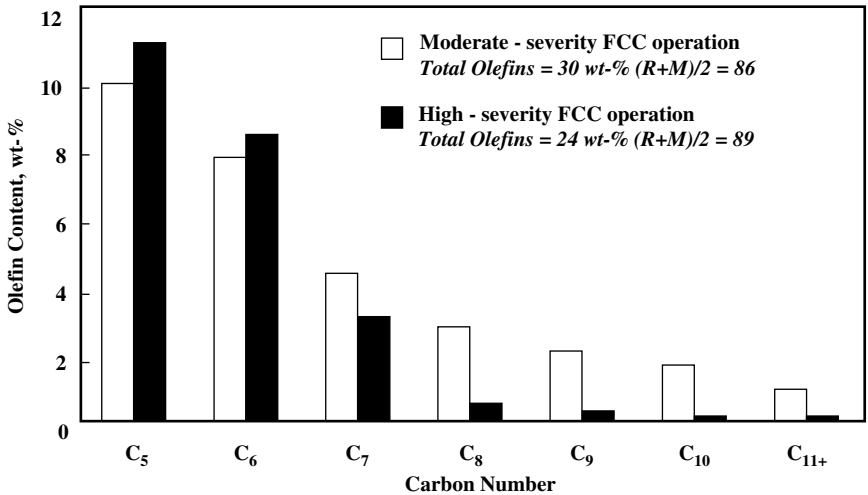

FIGURE 11.6.6 Impact of FCC operating severity.

technologies designed to reduce the sulfur content of FCC naphtha. These processes fall within two broad general categories:

- Those that remove sulfur from the FCC unit's feedstock (pretreating)
- Those that process the naphtha after it is produced in the FCC unit (posttreating)

FCC NAPHTHA PRETREATING

Pretreating the feed to an FCC unit, whether by hydrotreating or low-severity hydrocracking, has been shown to be an economical way to reduce the sulfur content of FCC naphtha.[3] Pretreating also allows the refiner to benefit from increased gasoline and LPG yields, reduced coke make, and significantly lower SO_x emissions from the FCC.

Typical hydrotreating requirements for FCC pretreating and posttreating units are summarized in Table 11.6.2. The most obvious difference between these two approaches is the significantly larger hydrotreating capacity required for the pretreating option, since the entire feed to the FCC unit must be processed. Due to its higher operating severity, the pretreating unit also has significantly greater catalyst and hydrogen requirements. Higher pretreating severity, however, reduces the nitrogen contents of the FCC's naphtha and LCO products and makes them easier to hydrotreat. In addition, pretreating becomes even more attractive if the refiner can benefit from the incremental FCC capacity that becomes available as a result of conversion in the pretreating unit.

The economics of FCC feed pretreating are often very attractive. Unfortunately, capital restrictions frequently limit the refiner's ability to implement these projects. Instead, despite the fact that naphtha posttreating tends to reduce refining margins, refiners often choose the posttreating route since it offers the lowest-capital route to gasoline desulfurization.

Downloaded from Digital Engineering Library @ McGraw-Hill (www.digitalengineeringlibrary.com)
Copyright © 2004 The McGraw-Hill Companies. All rights reserved.
Any use is subject to the Terms of Use as given at the website.

GASOLINE DESULFURIZATION

TABLE 11.6.2 Pretreating versus Posttreating Severity

	FCC feed pretreat	FCC naphtha desulfurization
Feed rate, BPSD	55,000	30,000
Reactor pressure	Base	0.3 (Base)
H_2 consumption, SCFB	600	50–200
ISBL EEC, $ million	170	23

FCC NAPHTHA POSTTREATING

Refiners' early attempts at reducing gasoline sulfur levels focused on conventional naphtha hydrotreating units because they were very efficient at removing sulfur, particularly when processing less-olefinic feedstock such as straight-run naphtha. When these units were required to process olefinic feedstock such as coker and FCC naphtha, however, the typical hydrotreating catalysts and processing conditions that were used also promoted other reactions, including olefin saturation. Because olefins have higher octane than their paraffinic counterparts, this approach reduced the octane of the FCC naphtha.

Because FCC naphtha represents such a large portion of a refinery's gasoline pool, it is also usually the refinery's largest octane-barrel contributor. Since both the olefinic and aromatic components of the FCC naphtha contribute to its octane, proper octane management involves preserving as much of the aromatic and olefinic components as possible. Fortunately, aromatic preservation during posttreating is generally not an issue since the processing conditions required for typical posttreating operations have little impact on the aromatic components. Olefin management, however, is a critical issue that must be considered.

The actual octane reduction that can occur during hydrotreating is influenced by many factors, including the desired level of desulfurization, the types and amounts of olefins present in the FCC naphtha, and interactions between the naphtha's various hydrocarbon components. As Figs. 11.6.7 and 11.6.8 indicate, the octane loss observed when saturating pure olefinic components can range from 5 to 70 RONC depending upon the olefin's structure and its molecular weight. Octane loss is greater for normal olefins than for branched olefins, while heavier olefins lose more octane than lighter olefins and internal double bonds lose more octane than terminal ones. As Fig. 11.6.9 illustrates, the rate of olefin saturation also varies with molecular weight and structure, with heavier olefins being more reactive than lighter olefins and normal olefins being more reactive than iso- and cyclic olefins.

In practice, however, the octane that a component can contribute to the gasoline blend can differ significantly from its pure component octane. Figure 11.6.10, which illustrates the effect of olefin saturation for a typical FBR FCC naphtha, indicates the naphtha's Road octane declines approximately 0.2 to 0.5 $(R + M)/2$ for each weight percent of olefins saturated. For this reason, conventional hydrotreating of this naphtha would typically not be acceptable since the octane loss from total olefin saturation would be excessive.

Although the lighter olefins tend to lose less octane when hydrotreated, Fig. 11.6.5 indicates the olefin distribution within a typical FBR FCC naphtha is significantly weighted toward lighter olefins. Consequently, although the sulfur in the light FCC naphtha is primarily mercaptan sulfur, significant octane loss can occur if this fraction is hydrotreated. Fortunately, as Table 11.6.3 indicates, splitting FCC naphtha provides the opportunity to improve olefin management by exploiting the natural segregation of sulfur and olefinic components that occurs within the naphtha.

Table 11.6.3 compares the economics of hydrotreating an FBR FCC naphtha to a flow scheme that involves fractionating the FBR naphtha, caustic-extracting the mercaptan-rich lighter fraction, and hydrotreating the less-olefinic heavy naphtha fraction. For the condi-

Downloaded from Digital Engineering Library @ McGraw-Hill (www.digitalengineeringlibrary.com)
Copyright © 2004 The McGraw-Hill Companies. All rights reserved.
Any use is subject to the Terms of Use as given at the website.

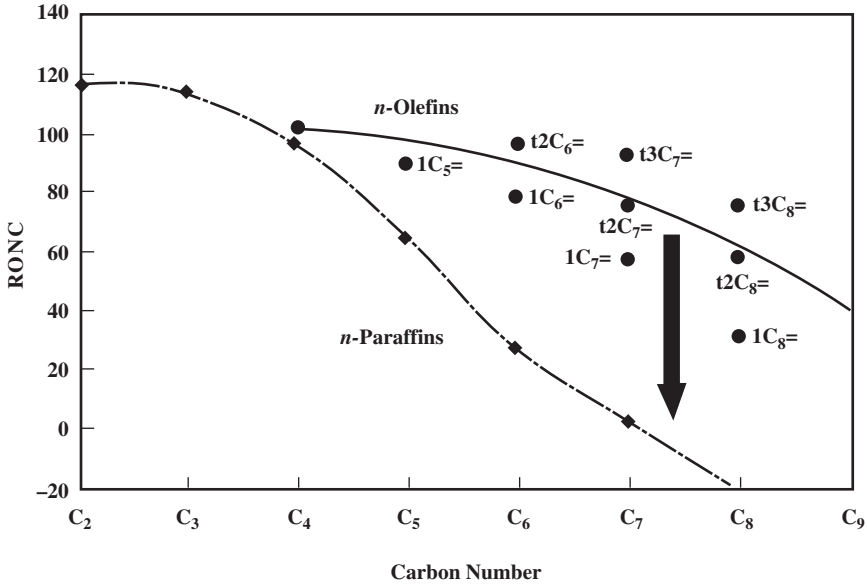

FIGURE 11.6.7 Octane loss from saturation of *n*-olefins.

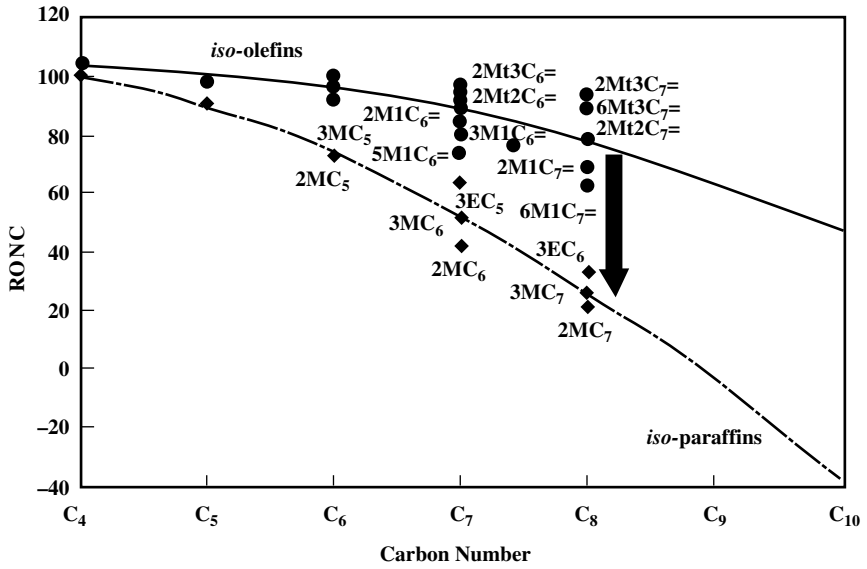

FIGURE 11.6.8 Octane loss from saturation of iso-olefins.

Downloaded from Digital Engineering Library @ McGraw-Hill (www.digitalengineeringlibrary.com)
Copyright © 2004 The McGraw-Hill Companies. All rights reserved.
Any use is subject to the Terms of Use as given at the website.

GASOLINE DESULFURIZATION

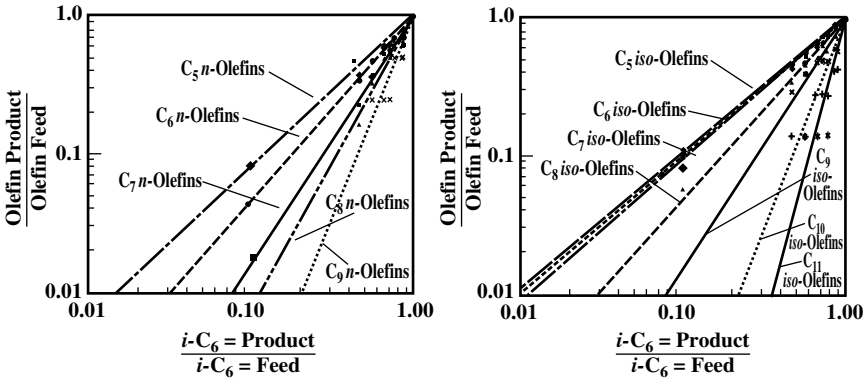

FIGURE 11.6.9 Relative olefin reactivities.

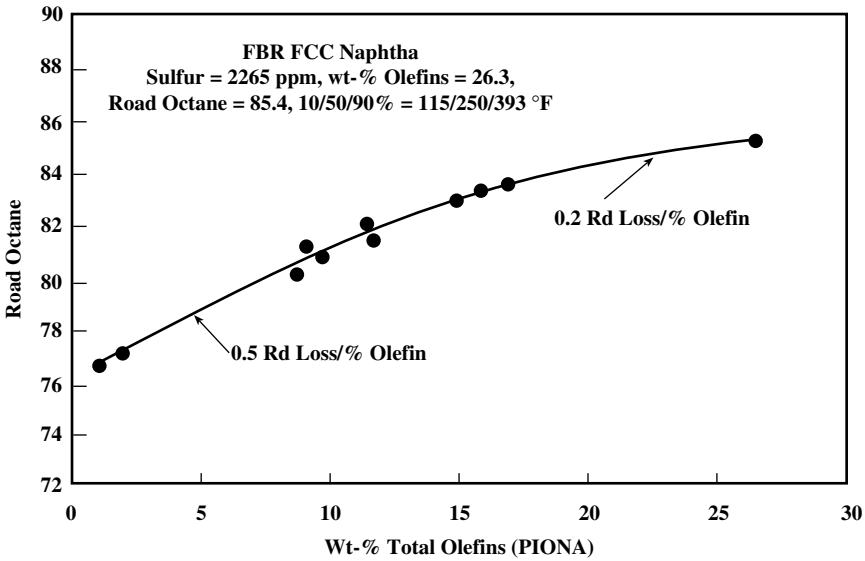

FIGURE 11.6.10 Octane loss during olefin saturation.

tions established in Table 11.6.3, splitting the naphtha into its light and heavy fractions resulted in a $0.36 per barrel improvement in posttreating economics. The improved economics were primarily due to the lower hydrogen demand and reduced octane loss that resulted from elimination of the light olefins from the hydrotreater's feed. This example highlights a key advantage that naphtha splitting provides when used in an integrated posttreating approach: the ability to separate olefin and sulfur types by their boiling ranges. This ability provides refiners with additional processing flexibility, enabling them to approach desulfurization and octane management from virtually the molecular level.

Downloaded from Digital Engineering Library @ McGraw-Hill (www.digitalengineeringlibrary.com)
Copyright © 2004 The McGraw-Hill Companies. All rights reserved.
Any use is subject to the Terms of Use as given at the website.

GASOLINE DESULFURIZATION

TABLE 11.6.3 Economics of Naphtha Splitting

No splitter	Splitter
Capital = \$680/bbl	Capital = \$700/bbl
H_2 = 200 SCFB	H_2 = 125 SCFB
Octane loss = 2.1	Octane loss = 1.4
Economic advantage due to reduced H_2 consumption and octane loss* = \$0.36/bbl	

*Basis \$0.25/octane bbl, \$250/MSCF H_2.

OLEFIN MANAGEMENT IN LIGHT FCC NAPHTHA PROCESSING

Removing mercaptans from light FCC naphtha without incurring an octane loss can be cost-effectively achieved by several methods. These include caustic extraction and mercaptan sweetening technologies. The choice of technologies is influenced by many factors, including the amount and types of sulfur in the naphtha, feed stability (polymerization potential), product sulfur specifications, and existing equipment.

Caustic Extraction of Light FCC Naphtha

In the preceding example, a caustic extraction unit was used to remove a significant portion of the extractable mercaptan sulfur from the light FCC naphtha. This is arguably the most common approach to mercaptan removal. The extraction of mercaptans from gasoline dates from the time when lead additives, such as TEL and TML, were used to improve gasoline octane. By reducing the gasoline component's sulfur content, its susceptibility to lead additives increased and refiners were able to reduce the additive rate needed to achieve a given octane. Today, with the virtual elimination of lead additives, interest in caustic extraction technology has shifted to removal of the gasoline's mercaptan sulfur to help meet tighter gasoline sulfur specifications.

Predominant among the caustic extraction processes is UOP's Merox extraction technology.[4] This technology is based on the ability of an organometallic catalyst to promote the oxidation of mercaptans to disulfides. The flow scheme of an extractive Merox unit, illustrated in Fig. 11.6.11, employs a single multistage vertical extraction column that utilizes proprietary high-efficiency, high-velocity extraction trays to achieve mercaptan extraction efficiencies approaching 100 percent when processing light mercaptans. The low-molecular-weight mercaptans are removed by contacting them with a regenerated caustic solution and a small amount of caustic-soluble reagent. Spent caustic is regenerated by oxidizing with air, which also converts the recovered mercaptans to disulfides. These disulfides can then be recovered by naphtha washing, producing an essentially mercaptan-free, "doctor sweet" naphtha for gasoline blending. The disulfide oil and wash naphtha stream is decanted and then sent for reprocessing.

Because olefins are not saturated in the Merox unit, it is desirable to recover as many olefins as possible in the naphtha splitter's light overhead fraction. Unfortunately, since mercaptan extraction efficiencies decline as the molecular weight and branching of the mercaptan increase, the amount of light FCC naphtha that can be processed in an extractive Merox unit will decline as the desired gasoline sulfur level decreases. Optimal olefin management involves maximizing the amount of nonextractable sulfur components, and

Downloaded from Digital Engineering Library @ McGraw-Hill (www.digitalengineeringlibrary.com)
Copyright © 2004 The McGraw-Hill Companies. All rights reserved.
Any use is subject to the Terms of Use as given at the website.

GASOLINE DESULFURIZATION

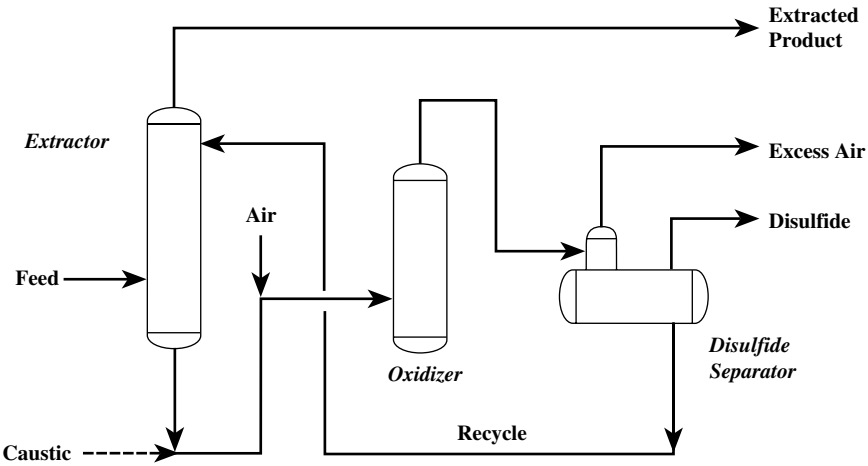

FIGURE 11.6.11 UOP Merox process flow scheme.

therefore the amount of olefins, contained in the product from the Merox unit consistent with satisfying the required product sulfur content. This approach also minimizes the amount of olefins in the splitter's heavy naphtha fraction. Because sulfur species exhibit varying degrees of nonideal behavior during fractionation, operational and experimental data play key roles in establishing the optimal endpoint of the light naphtha. A light naphtha endpoint of approximately 150°F is usually considered adequate for recovering a light naphtha fraction that contains primarily mercaptan-type sulfur components, as well as some thiophenic sulfur.

Sweetening Light FCC Naphtha

Sweetening technology may also be used to remove the mercaptans from light FCC naphtha. Unlike caustic extraction, sweetening reactions involve catalytic oxidation of two mercaptan sulfur components and the formation of a nonodorous disulfide sulfur compound. In a typical sweetening application, the disulfide compound would be allowed to remain in the gasoline. Although this would not actually reduce the naphtha's sulfur content, it would produce a "doctor sweet" naphtha.

As illustrated in Fig. 11.6.12, UOP's Sweetfrac technology can be used to reduce the sulfur content of light FCC naphtha by simply repositioning the Merox sweetening unit upstream of the naphtha splitter. This approach allows the disulfide compounds formed in the sweetening process, which have significantly higher boiling points than their respective mercaptan components, to be recovered in the splitter's heavy naphtha fraction. Since these newly formed disulfides are easily hydrotreated, they are readily converted to H_2S in the downstream hydroprocessing unit. Consequently, the light naphtha fraction recovered from the naphtha splitter will be essentially mercaptan-free and can be sent to gasoline blending without further treating. In addition, because mercaptan oxidation is not limited by mercaptan extraction efficiency or reentry sulfur concerns, sweetening the FCC naphtha upstream of the naphtha splitter enables the refiner to extend the light naphtha's endpoint, recovering more olefins in the light naphtha fraction and further improving olefin management.

Downloaded from Digital Engineering Library @ McGraw-Hill (www.digitalengineeringlibrary.com)
Copyright © 2004 The McGraw-Hill Companies. All rights reserved.
Any use is subject to the Terms of Use as given at the website.

GASOLINE DESULFURIZATION

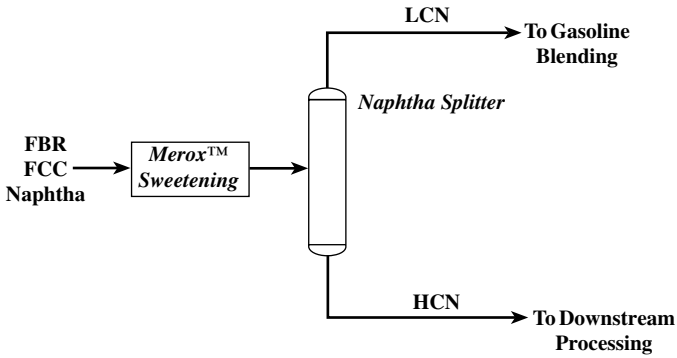

FIGURE 11.6.12 UOP Sweetfrac process flow scheme.

OLEFIN MANAGEMENT IN HEAVY FCC NAPHTHA PROCESSING

As discussed previously, naphtha splitting allows the bulk of the FCC naphtha's sulfur-containing species to be concentrated into a smaller stream. The resulting heavy naphtha, which contains significantly fewer olefins, can then be processed independently of the lighter naphtha. This approach also provides some control over the octane of the post-treated naphtha since hydrotreating only the heavy naphtha reduces the octane loss caused by light olefin saturation.

Although several processing options are available to remove the mercaptan sulfur from light naphtha without saturating the naphtha's olefinic components, the naphtha's nonextractable thiophene component and the required degree of desulfurization frequently limit the amount of light naphtha that may be recovered. For these reasons, several technologies have been developed to selectively convert sulfur while minimizing olefin saturation.

Selective Hydrotreating of Heavy FCC Naphtha

Predominant among the processes designed to reduce olefin saturation during hydrotreating are the "selective hydrotreating" technologies.[5,6] These technologies reduce olefin saturation by adjusting the catalyst formulations, process configurations, and process conditions used in typical conventional hydrotreating units. In fact, early applications of these technologies used a single-stage process configuration very similar to that of a conventional hydrotreater. However, because olefin saturation reactions have a stronger pressure dependency than desulfurization reactions, lower pressures (200 to 400 lb/in^2 gauge) and lower catalyst metals levels are used.

Figure 11.6.13 illustrates the relationship between desulfurization and olefin saturation rates for both conventional and selective hydrotreating processes. Of particular interest is the shape of these curves which, rather than being linear, vary with desulfurization level. Consequently, because olefin saturation increases more quickly at the higher desulfurization levels, refiners are forced to tolerate increasingly higher octane losses at the more severe desulfurization levels required to satisfy ultralow-sulfur gasoline specifications. An additional concern of selective hydrotreating is the tendency to promote mercaptan recombination reactions that occur when H_2S produced in the desulfurization reactions combines

Downloaded from Digital Engineering Library @ McGraw-Hill (www.digitalengineeringlibrary.com)
Copyright © 2004 The McGraw-Hill Companies. All rights reserved.
Any use is subject to the Terms of Use as given at the website.

GASOLINE DESULFURIZATION

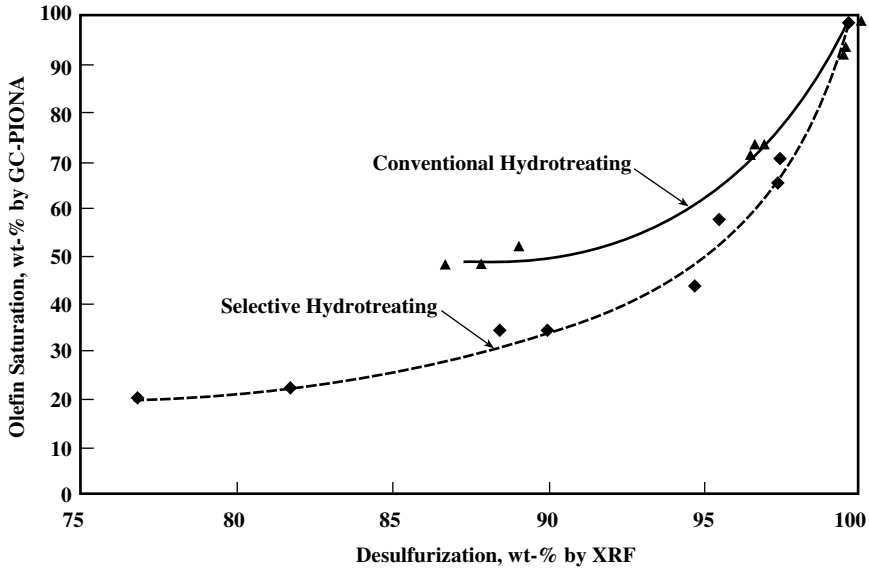

FIGURE 11.6.13 Selective hydrotreating performance.

with unreacted olefins to form new, higher-molecular-weight mercaptans. Unfortunately, these recombined mercaptans contribute to the overall sulfur content of the hydrotreated product, since heavy mercaptans are not easily removed by caustic extraction.

When hydroprocessing catalyst is present, mercaptan recombination reactions occur very fast and approach an equilibrium that increases with higher product olefin content and H_2S partial pressure, and lower reactor outlet temperature. Since the primary goal of selective hydrotreating involves maximizing the product's olefin content, once the unit is operating, the only factors that can appreciably alter the H_2S partial pressure are the sulfur content of the feedstock and the required desulfurization level. Figure 11.6.14 shows the equilibrium recombination mercaptan levels that are formed at typical selective hydrotreating conditions for different FCC naphtha sulfur contents. As this figure illustrates, higher feedstock sulfur contents reduce the ability to achieve low recombination mercaptan levels at normal selective hydrotreating temperatures (500 to 650°F). As a result, for certain combinations of feedstock quality and operating conditions it can be possible to produce recombination mercaptan levels that actually exceed the gasoline's sulfur target, limiting the refiner's ability to produce ultralow-sulfur product.

Figure 11.6.14, however, also indicates that recombination mercaptan content can be reduced by increasing the reactor outlet temperature. Unfortunately, higher reactor outlet temperature increases olefin saturation, reduces product octane, and ultimately impacts processing flexibility by linking octane loss to recombination sulfur and olefin content. Regrettably, these higher temperatures also reduce operating cycles since, at higher temperatures, the same factors that favored improved olefin selectivity (reduced catalyst metals levels and lower operating pressure) also promote catalyst instability. For these reasons, selective hydrotreating operating conditions represent a compromise between olefin selectivity and acceptable catalyst life.

Downloaded from Digital Engineering Library @ McGraw-Hill (www.digitalengineeringlibrary.com)
Copyright © 2004 The McGraw-Hill Companies. All rights reserved.
Any use is subject to the Terms of Use as given at the website.

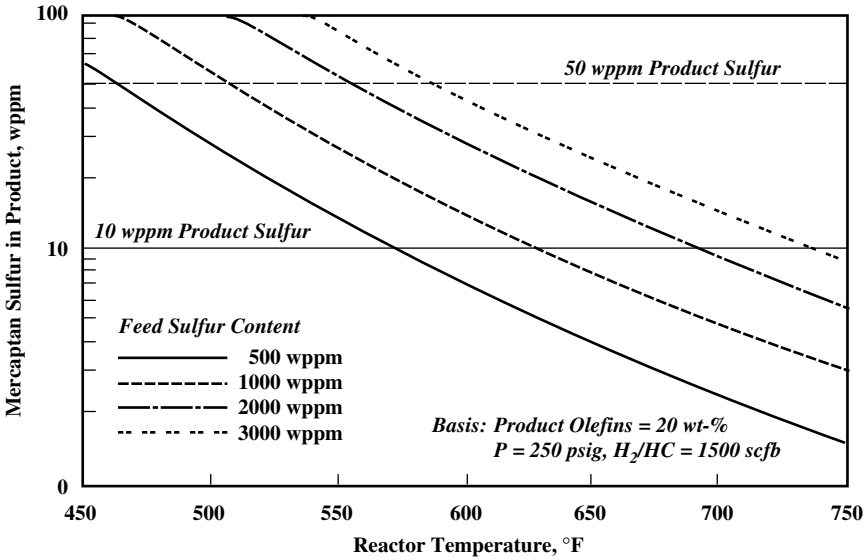

FIGURE 11.6.14 Equilibrium recombination sulfur.

Second-Generation Selective Hydrotreating Processes

Several approaches have been introduced to reduce the recombination mercaptan levels observed at the higher desulfurization levels required for ultralow-sulfur gasoline production. Some address the problem by adding a second selective hydrotreating stage, a liquid separator located between the two stages, and a recycle gas scrubber.[7] The resulting "second-generation" two-stage configuration reduces H_2S partial pressure at the second-stage reactor outlet by removing the H_2S produced in the unit's first stage. Although this approach offers a slight improvement in desulfurization selectivity, since H_2S inhibits desulfurization reactions more than olefin saturation reactions, the combined cost of the second reactor, separator, recycle gas scrubber, and additional heat integration required for the two-stage configuration can increase capital cost by 30 to 40 percent relative to a single-stage design.

Rather than adding another desulfurization stage, another approach for achieving increased desulfurization rates at acceptable recombination mercaptan levels involves the addition of a caustic extraction step, utilizing an ethanol solutizer, to a single-stage selective hydrotreating flow scheme.[8] Mercaptan removal rates of up to 90 percent have been reported, although the additional capital requirement is equivalent to 35 to 50 percent of the cost of the single-stage selective hydrotreater.

Reactive Distillation

Still another approach for reducing the level of olefin saturation during hydrotreating involves reactive distillation, and the natural temperature gradient that exists within a catalytic distillation column, to promote selective hydrotreating reactions.[9] In this approach, the lighter FCC naphtha is hydrotreated at the top of the reactive distillation column

Downloaded from Digital Engineering Library @ McGraw-Hill (www.digitalengineeringlibrary.com)
Copyright © 2004 The McGraw-Hill Companies. All rights reserved.
Any use is subject to the Terms of Use as given at the website.

GASOLINE DESULFURIZATION

where the mildest (lowest-temperature) hydrotreating conditions exist. Because this material contains the more readily hydrotreated sulfur and a large portion of the naphtha's olefins, these mild conditions reduce olefin saturation and octane loss. Conversely, the less olefinic heavy naphtha, which contains the more refractive sulfur compounds, is selectively hydrotreated at the progressively higher severities (higher temperatures) in the lower sections of the column.

Similar to conventional hydrotreating, the required reactive distillation reaction temperatures are dependent upon such factors as the types of sulfur present, their relative desulfurization rates, and the desired product sulfur content. For mild hydrotreating applications, the capital requirement for reactive distillation is often less than that for alternative approaches since the column acts as both a naphtha splitter and a reactor. At the higher desulfurization levels required to produce ultralow-sulfur gasoline, however, more heat must be added to the reactive distillation column to promote the necessary desulfurization reactions. Since reaction temperature and column temperature are the same in this technology, these higher temperatures unfortunately increase olefin saturation and reduce the product's octane. To circumvent excessive olefin saturation at higher desulfurization levels, an additional reactor must be added to the flow scheme when desulfurization levels greater than approximately 90 percent are required. Although other reactive distillation techniques such as recovery of intermediate product fractions and independent processing of these fractions have been suggested, these modifications will further increase the cost of the process.

Selective Hydroconversion

Lower recombination sulfur levels can be achieved by reducing the concentration of either of the two reactants, olefins or H_2S, required for the recombination reactions. In selective hydrotreating, this is achieved by adding a second reaction stage and a recycle gas scrubber to reduce H_2S partial pressure. Another approach to lower recombination sulfur levels involves reducing the concentration of the olefinic reactant. Unfortunately, this approach can lead to significant octane loss since none of the reactions that are promoted by conventional hydrotreating catalysts will restore lost octane.

Technologies have been developed to allow refiners to regain the octane lost from olefin saturation. The ISAL hydroconversion technology illustrated in Fig. 11.6.15 has been jointly developed by UOP and PDVSA-Intevep to simultaneously achieve desulfurization and octane control through the use of a fixed-bed, dual-catalyst system that operates within a single-stage process configuration very similar to that of a conventional hydrotreater. The dual-catalyst system saturates the feedstock's olefinic components, then regains lost octane by promoting octane-enhancing reactions. With this technology, the operating severity required to achieve a particular product octane depends upon several factors, including the feedstock's molecular structure and its olefin content. Similar to reforming, higher operating severity promotes increased product octane at the expense of additional conversion to light hydrocarbon, primarily LPG-range, product. This yield/octane relationship enables the unit's operation to be optimized to meet the refiner's particular octane requirements.

Recombination sulfur issues are eliminated with this technology since olefins are saturated in the process. Commercial operations have produced "doctor sweet" gasoline products with total sulfur contents of less than 5 wt ppm. Depending upon the required octane recovery, however, conversion to lighter products may not be acceptable. Consequently, it is preferable to fractionate the feed to remove light olefins, which both reduces operating severity and improves product yield.

Downloaded from Digital Engineering Library @ McGraw-Hill (www.digitalengineeringlibrary.com)
Copyright © 2004 The McGraw-Hill Companies. All rights reserved.
Any use is subject to the Terms of Use as given at the website.

GASOLINE DESULFURIZATION

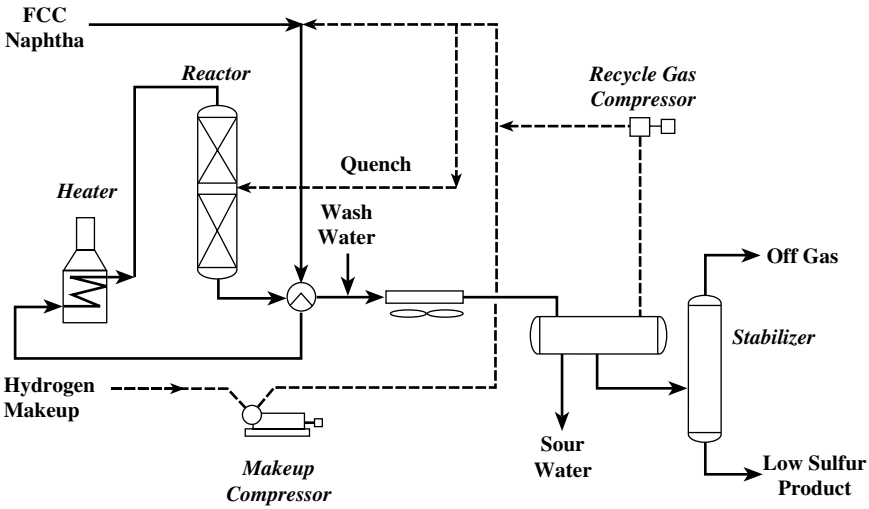

FIGURE 11.6.15 UOP/Intevep ISAL process flow scheme.

RECOVERING INTERMEDIATE-RANGE FCC NAPHTHA

Separating an FCC naphtha into its light and heavy fractions was previously shown to improve posttreating economics by reducing both octane loss and hydrogen consumption. In the context of a fully integrated refinery, naphtha splitting plays a critical role in the overall gasoline posttreating scheme since it provides the ability to separate olefin and sulfur types by their boiling ranges, enabling desulfurization, octane management, and recombination sulfur issues to be approached from virtually the molecular level. Unfortunately, the amount of light naphtha that can be recovered is often limited not by the splitter's design, but rather by the amount of nonextractable sulfur present in the splitter's feed.

A review of the sulfur types present in FCC naphtha indicates the lightest sulfur component that is not extractable in caustic is thiophene. With a true boiling point of 183°F, thiophene should boil within the range of the heavier, caustic-extractable C_3 and C_4 mercaptans (163 to 208°F). Similarly, the next-heavier thiophenes, substituted C_1 and C_2 thiophenes, have boiling points ranging from approximately 235 to 300°F, and should boil well outside the range of these heavier mercaptans. In reality, as Fig. 11.6.16 indicates, commercial FCC operations have shown that thiophene and lighter substituted thiophenes actually boil over a very wide range, beginning at temperatures as low as 40°F below their true boiling points. This nonideal distillation behavior imposes two major restrictions on the refiner. First, since these thiophenic components can often account for up to 25 percent of the total sulfur in an FCC naphtha, it limits the amount of light naphtha that can be recovered for a given product sulfur level. Second, it limits the light naphtha's endpoint, forcing more olefins into the heavy naphtha fraction.

The splitter's heavy naphtha fraction will contain primarily thiophenic- and benzothiophenic-type sulfur as well as a significant amount of olefins. Hydrotreating this fraction while preserving olefins is difficult due to the wide range of desulfurization rates that these sulfur species exhibit. As Fig. 11.6.17 illustrates, while the sulfur atom in a thiophene molecule is relatively easily hydrotreated, desulfurization rates decline as access to the sulfur atom decreases. The desulfurization rate of a sterically hindered substituted thiophene such

Downloaded from Digital Engineering Library @ McGraw-Hill (www.digitalengineeringlibrary.com)
Copyright © 2004 The McGraw-Hill Companies. All rights reserved.
Any use is subject to the Terms of Use as given at the website.

GASOLINE DESULFURIZATION

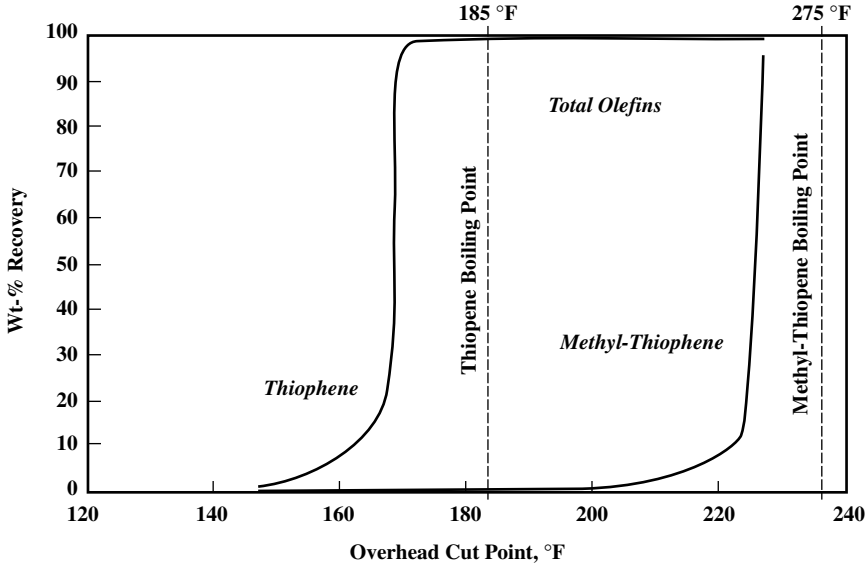

FIGURE 11.6.16 Fractionation of thiophenic sulfur.

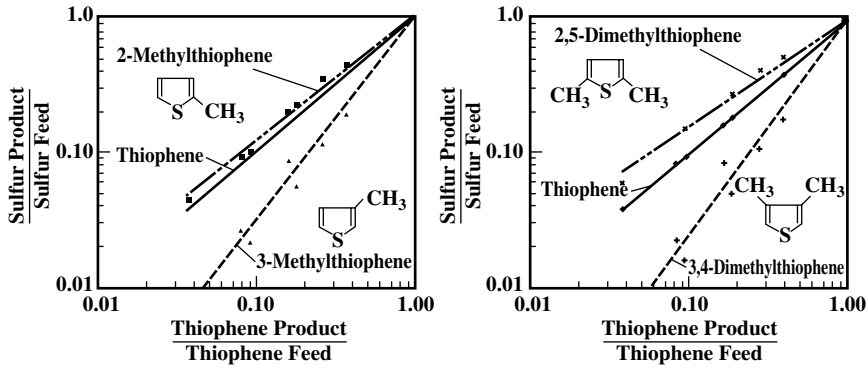

FIGURE 11.6.17 HDS reactivities of thiophenic sulfur.

as 2-methyl thiophene, for example, can be as little as one-hundredth that of a substituted thiophene with a methyl group located farther from the sulfur atom. Similarly, although the desulfurization rate of benzothiophene is more than 1000 times higher than that of thiophene, some substituted benzothiophenes are actually harder to desulfurize than thiophene. Clearly, the amount and type of sulfur species in the heavy FCC naphtha will have a significant influence on its required hydrotreating severity and, consequently, on the amount of olefins saturated during the hydrotreating process.

Again, a review of the boiling points of the various sulfur species present in FCC naphtha is helpful. While more easily hydrotreated thiophene boils toward the front end of the FCC naphtha, the more refractive substituted thiophenes (b.p. ~235 to 290°F) are con-

Downloaded from Digital Engineering Library @ McGraw-Hill (www.digitalengineeringlibrary.com)
Copyright © 2004 The McGraw-Hill Companies. All rights reserved.
Any use is subject to the Terms of Use as given at the website.

GASOLINE DESULFURIZATION

centrated in the naphtha's mid-boiling range. Based on a typical FCC naphtha olefin distribution, it is logical to conclude that fractionating thiophene from the more refractive sulfur species would significantly reduce the olefin content of the heavy naphtha. Recovery of the naphtha's thiophene component, which can easily be accomplished by the addition of a side draw stream to the naphtha splitter design, will cause fewer olefins to be saturated during the hydrotreating of the more refractive sulfur species and will result in less overall octane loss.

OLEFIN MANAGEMENT IN INTERMEDIATE FCC NAPHTHA PROCESSING

An understanding of the unique characteristics of thiophene and light substituted thiophenes has encouraged the development of several technologies specifically designed to desulfurize intermediate-range FCC naphtha. While the objective of each of these technologies involves preserving the olefins in the intermediate naphtha, the approaches the y use vary widely, ranging from selective hydrotreating to conversion or extraction of the thiophenic components.

Mid-Cut Selective Hydrotreating

The nonlinear olefin and sulfur distributions of an FCC naphtha typically produce an intermediate FCC naphtha that contains much less sulfur than the heavy naphtha and fewer olefins than the light naphtha. Unfortunately, since this midrange naphtha will usually still contain an appreciable amount of olefins, conventional hydrotreating of this fraction can result in significant octane loss.

Depending upon the sulfur content of the midrange naphtha fraction and the final gasoline sulfur specification, it may be possible to selectively hydrotreat this fraction while preserving a significant amount of its octane. In actual application, this midrange selecti ve hydrotreating operation might be implemented either as a stand-alone unit or, as illustrated in the split-feed (SF) ISAL processing configuration of Fig. 11.6.18, as part of the hydroprocessing unit treating the heavy naphtha fraction. Regardless of how it is imple-

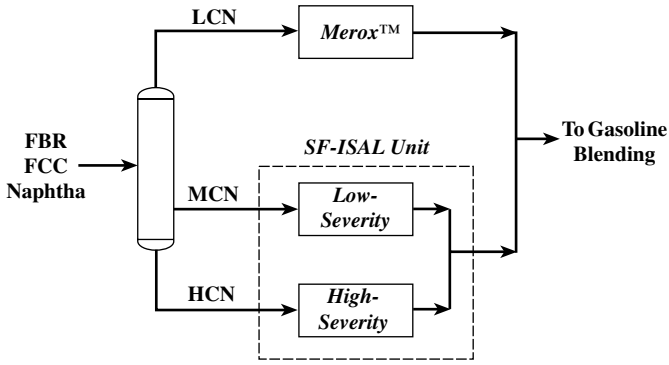

FIGURE 11.6.18 Application of SF-ISAL process.

Downloaded from Digital Engineering Library @ McGraw-Hill (www.digitalengineeringlibrary.com)
Copyright © 2004 The McGraw-Hill Companies. All rights reserved.
Any use is subject to the Terms of Use as given at the website.

GASOLINE DESULFURIZATION

mented, selective hydrotreating of the midrange fraction produces much less H_2S, which reduces H_2S partial pressure and minimizes recombination reactions.

Thiophene Conversion

Under the appropriate processing conditions, an acid-based catalyst can promote the reaction of thiophene with olefins to produce heavier, alkylated thiophenes.[10] Because these heavier sulfur compounds boil beyond the range of typical gasoline, they can be separated from the midrange naphtha by fractionation, thus producing a gasoline product with a lower sulfur content. The higher-boiling-range sulfur compounds recovered in the fractionation can then be sent to the refinery's diesel pool or, if necessary, hydrotreated before blending to distillate.

Although sulfur removal rates of more than 99 percent have been claimed with this approach, compounds other than thiophene may also be alkylated. The relative reaction rates for alkylation of benzene- and thiophene-based components are close enough that some loss of gasoline-range aromatics is inevitable. Kinetic calculations suggest that this could result in a potential yield shift from gasoline to distillate of up to 4 percent, which will result in the need for incremental distillate hydrotreating capacity. Consumption of some olefins also impacts the yield and octane of the gasoline product. Finally, the need to acid-wash the unit's feed to protect the solid acid catalyst from organic nitrogen compounds, combined with the catalyst's general physical and chemical characteristics, magnifies the complexity, operability, and environmental impact of the process.

Thiophene Extraction

Extraction methods that employ solvent such as tetramethylene sulfone (Sulfolane) to recover the aromatic components of reformed naphtha have been used in the petrochemical industry for decades. A comparison of the physical properties of thiophene and Sulfolane reveals they have similar molecular structures, but significantly different boiling points. By exploiting these characteristics, UOP's Sulfur-X solvent extraction technology provides the ability to extract sulfur from the midrange FCC naphtha and also separate the solvent from the recovered sulfur.[11]

As Fig. 11.6.19 illustrates, with this technology naphtha is introduced into a vertical extractor vessel where it flows upward, countercurrent to the incoming solvent. Thiophene, as well as mercaptans and light substituted thiophenes, selectively dissolves into the solvent, producing a low-sulfur, high-olefin extracted product for gasoline blending. A steam-reboiled recovery column is used to separate solvent from the extracted sulfur and hydrocarbons. The recovered fresh solvent is recycled to the extractor, while the small hydrocarbon stream from the column, which contains the majority of the sulfur present in the original midrange naphtha, is recovered for downstream processing.

Because this technology removes sulfur by physical separation, rather than by catalytic conversion, no hydrogen is consumed. Liquid yields are essentially 100 percent, and extraction rates of thiophene and the light substituted thiophenes exceed 95 percent. Table 11.6.4 provides a summary of the performance of the process when treating a 100 to 260°F midrange FCC naphtha containing 400 wt ppm sulfur and 45 percent vol % olefins. As this table indicates, more than 98 percent of the sulfur can be removed from the midrange fraction while retaining more than 90 percent of the fraction's olefinic components. This is superior to selective hydrotreating where typically one-third or more of the olefins would be saturated at a similar desulfurization level. In addition, since no H_2S is produced in the extraction process, mercaptan recombination is not an issue.

Downloaded from Digital Engineering Library @ McGraw-Hill (www.digitalengineeringlibrary.com)
Copyright © 2004 The McGraw-Hill Companies. All rights reserved.
Any use is subject to the Terms of Use as given at the website.

GASOLINE DESULFURIZATION

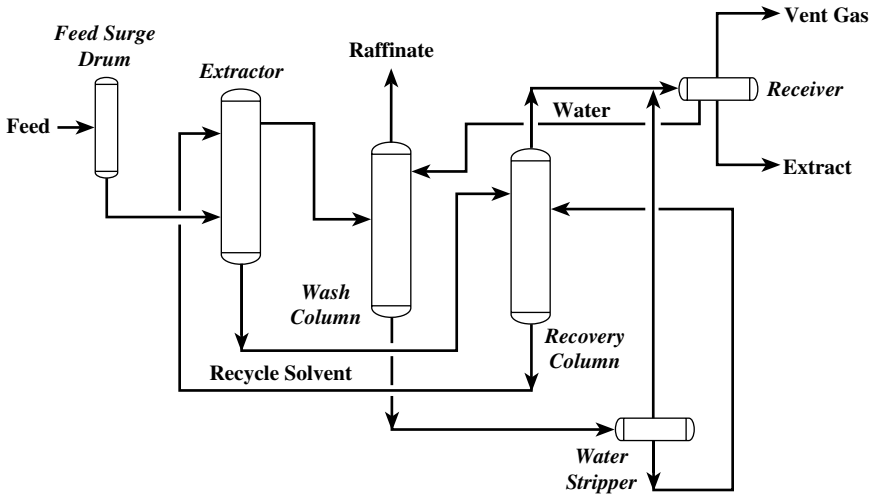

FIGURE 11.6.19 UOP Sulfur-X process flow scheme.

TABLE 11.6.4 Performance of UOP Sulfur-X Unit

	Feed	Raffinate	Extract
Yield, vol % feed	100	93.0	7.0
Sulfur, wt ppm	400	9	4900
Olefins, vol %	45	45	45
Sulfur removal = 98 wt %			
Olefin retention = 90 vol %			

INTEGRATED SOLUTIONS FOR GASOLINE DESULFURIZATION

Because history plays a key role in the learning process, valuable insight into the future direction of gasoline desulfurization can be gained by reviewing the development sequence of gasoline desulfurization technologies over the last few years. Initially, licensors regarded tighter gasoline sulfur regulations as an issue of simply determining the best catalyst, or the additional severity, needed for their existing process units. Once the limitations of that approach were fully realized, other techniques were proposed. In an attempt to reduce desulfurization costs, these techniques generally focused on single-technology solutions intended to process the entire FBR FCC naphtha.

Unfortunately, as tighter gasoline sulfur regulations emerged, revisions to these single-technology solutions were generally required. Some revisions were fairly minor, involving adjustments to catalyst formulations or operating conditions. Others were tolerable, requiring additional process equipment or the inclusion of pre- or postfractionation facilities. Still other revisions were major, including significant flow scheme revisions or the inclusion of other process units to treat their products. Interestingly, although feed fractionation was once considered a major impediment, it has now become a common feature of virtually every licensor's gasoline desulfurization offering.

Downloaded from Digital Engineering Library @ McGraw-Hill (www.digitalengineeringlibrary.com)
Copyright © 2004 The McGraw-Hill Companies. All rights reserved.
Any use is subject to the Terms of Use as given at the website.

GASOLINE DESULFURIZATION

In recent years, another shift in the direction of gasoline desulfurization has occurred. This shift has evolved from deeper understanding of the unique characteristics of the components of FCC naphtha, the relationship between olefin structure and octane loss, and the wide differences in desulfurization reactivities between the naphtha's various sulfur species. As a result, single-technology solutions are being replaced by gasoline desulfurization solutions that incorporate multiple technologies, with each technology being chosen based on the unique characteristics of the FCC naphtha.

An example of a gasoline desulfurization solution that incorporates several of the post-treating technologies that have been discussed is illustrated in Fig. 11.6.20. Initially, fractionation of the treated naphtha allows the naphtha's various olefin and sulfur components to be separated by boiling range. Then, depending upon the desired product quality, these fractions may be further processed or sent directly to the gasoline pool. If gasoline mercaptans are a concern, sweetening or caustic extraction of the light naphtha may be employed. If octane control is critical, the intermediate naphtha can be solvent-extracted to remove sulfur while minimizing olefin loss, with the extract from the solvent extraction unit being processed along with the low-olefin-content heavy naphtha for both desulfurization and octane control.

While each of the technologies used in Fig. 11.6.20 provides its own distinct set of processing advantages, it is the combination of these technologies that maximizes their post-treating contributions. Ultimately, this multitechnology approach provides the ability to desulfurize FCC naphtha and to control product octane, while offering the potential to improve feedstock and product flexibility, increase on-stream efficiencies, reduce operating costs, and enhance product blending capabilities.

SUMMARY

Recent legislation regarding significant reductions in the sulfur content of gasoline has forced refiners and technology licensors to focus on ways to reduce the sulfur content of FCC naphtha. In some cases, this legislation may be satisfied with adjustments to conventional process units. More often, however, new technologies designed around the unique characteristics of FCC naphtha will be required. In those cases, the selection of the most appropriate gasoline desulfurization approach will be a complicated process, involving a wide range of issues.

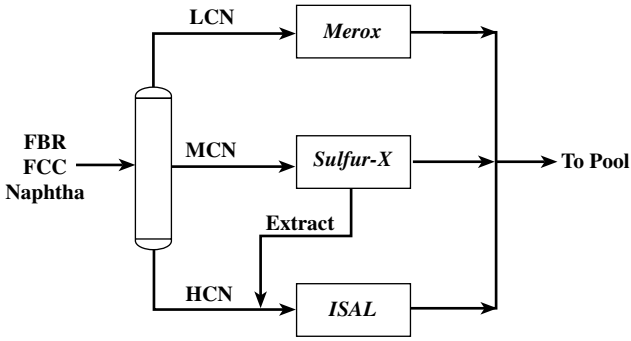

FIGURE 11.6.20 Integrated gasoline desulfurization solution.

Downloaded from Digital Engineering Library @ McGraw-Hill (www.digitalengineeringlibrary.com)
Copyright © 2004 The McGraw-Hill Companies. All rights reserved.
Any use is subject to the Terms of Use as given at the website.

GASOLINE DESULFURIZATION

For the selection process to be most effective, refiners will be required to become familiar with a variety of different technologies and the often subtle differences between them. The first step in the selection process will then involve determining whether adjustments to the operating severity, catalyst activity, or additive usage of the existing FCC unit will enable the new sulfur specification to be met. If posttreating of the FCC naphtha is necessary, a detailed review of the quality of the FCC naphtha, focusing specifically on the types and quantities of sulfur and olefin species present, must be conducted. This evaluation will identify the required degree of desulfurization and any specific fractionation requirements while allowing technologies that do not meet the refiner's specific processing requirements, such as octane value and hydrogen availability, to be eliminated.

The remaining technologies can then be evaluated based on their other characteristics, considering such factors as capital requirements, feedstock flexibility, and operating reliability. Ultimately, the refiner must be aware that no one technology will typically satisfy all these requirements. Instead, it is highly likely that some combination of technologies, possibly including both pre- and posttreating, may provide the best overall desulfurization solution.

REFERENCES

1. Final Report, 1996 American Petroleum Institute/National Petroleum Refiners Association, Survey of Refining Operations and Product Quality, July 1997.
2. J. A. Francis, C. W. Kuehler, J. A. Gonzalez, and A. P. Humphries, "Catalytic Technology Helps Resolve the Gasoline Sulfur Problem," 21st JPI Refining Conference, Tokyo, Oct. 22–23, 2002.
3. S. W. Shorey, D. A. Lomas, and W. H. Keesom, "Exploiting Synergy between FCC and Feed Pretreating Units to Improve Refinery Margins and Produce Low-Sulfur Fuels," AM-99-55, NPRA Annual Meeting, San Antonio, Tex., Mar. 21–23, 1999.
4. R. A. Meyers, *Handbook of Petroleum Refining Processes,* McGraw-Hill, 1986.
5. T. R. Halbert et al., "Technology Options for Meeting Low Sulfur Mogas Targets," AM-00-11, NPRA Annual Meeting, San Antonio, Tex., Mar. 26–28, 2000.
6. J. L. Nocca and Q. Debuisschert, "Prime G+™: From Pilot to Startup of World's First Commercial 10 ppm FCC Gasoline," AM-02-12, NPRA Annual Meeting, San Antonio, Tex., Mar. 17–19, 2002.
7. T. R. Talbert et al., "Scanfining™: A Commercially Proven Technology for Low Sulfur Gasoline," NPRA Annual Meeting, San Antonio, Tex., Mar. 17–19, 2002.
8. "Exomer^{SM} Low Sulfur Gasoline Technology," Technical Information sheet from Merichem, www.merichem.com.
9. R. Gardner et al., "Canadian Refinery Starts Up First-of-a-Kind Gasoline Desulfurization Unit," *Oil Gas J.,* 54–58 (June 18, 2001).
10. "BP Announces New Cleaner Gasoline Technology," Press Release, Nov. 16, 2000.
11. L. Zhou et al., "FCC Naphtha Desulfurization by Solvent Extraction," AIChE 2002 Spring Meeting, Mar. 10–14, 2002.

Downloaded from Digital Engineering Library @ McGraw-Hill (www.digitalengineeringlibrary.com)
Copyright © 2004 The McGraw-Hill Companies. All rights reserved.
Any use is subject to the Terms of Use as given at the website.

Source: HANDBOOK OF PETROLEUM REFINING PROCESSES

P · A · R · T · 12

VISBREAKING AND COKING

Downloaded from Digital Engineering Library @ McGraw-Hill (www.digitalengineeringlibrary.com)
Copyright © 2004 The McGraw-Hill Companies. All rights reserved.
Any use is subject to the Terms of Use as given at the website.

Downloaded from Digital Engineering Library @ McGraw-Hill (www.digitalengineeringlibrary.com)
Copyright © 2004 The McGraw-Hill Companies. All rights reserved.
Any use is subject to the Terms of Use as given at the website.

Source: HANDBOOK OF PETROLEUM REFINING PROCESSES

CHAPTER 12.1
CONOCOPHILLIPS DELAYED COKING PROCESS

Gary C. Hughes, Michelle I. Wohlgenant, and Brian J. Doerksen
ConocoPhillips Company
Coke and Carbon Technology
Ponca City, Oklahoma

INTRODUCTION

In today's competitive refining environment, delayed coking still remains the industry's leading economic choice in heavy oil upgrading technology. At most delayed coking sites, it is more profitable to limit coke generation due to its relatively low market value in comparison with the coker's other products. The top coking facilities are continually optimizing operations to increase flexibility for processing a variety of feedstocks, while maximizing higher-valued liquid and gas products. Equally critical in daily operations is the emphasis on maintaining a safe and reliable processing unit. The patented ConocoPhillips Delayed Coking Process is the most effective coking method commercially available today for designing new units and retrofitting existing sites.

The proprietary ConocoPhillips Delayed Coking Process is based upon patented processes and many years of operating experience. The heritage Conoco company first entered the realm of delayed coking with construction of its first coker in the early 1950s in Ponca City, Oklahoma. Conoco has designed all its internal coking facilities constructed after 1960. Then in the early 1980s, Conoco began licensing its delayed coking technology to outside companies. Now refiners throughout the world are utilizing the combined ConocoPhillips company's expertise for residual oil conversion. Figure 12.1.1 is a photograph of a ConocoPhillips-designed coker in Venezuela that began operation in early 2001.

Over the last 50 years, ConocoPhillips has gained valuable design and operating experience in all areas of delayed coking. This experience enabled ConocoPhillips to greatly improve the economics, reliability, and flexibility of the delayed coking process. ConocoPhillips is also the industry leader in the premium needle coke market. Figure 12.1.2 is a photograph of the fuel and premium coking units at the ConocoPhillips refinery in Lake Charles, Louisiana. Although ConocoPhillips does not license needle coke technology, this is a more severe process and much experience in this arena has been applied in the fuel and anode coke licensing technology. This chapter highlights many of the advantages associated with the patented delayed coking technology.

Downloaded from Digital Engineering Library @ McGraw-Hill (www.digitalengineeringlibrary.com)
Copyright © 2004 The McGraw-Hill Companies. All rights reserved.
Any use is subject to the Terms of Use as given at the website.

CONOCOPHILLIPS DELAYED COKING PROCESS

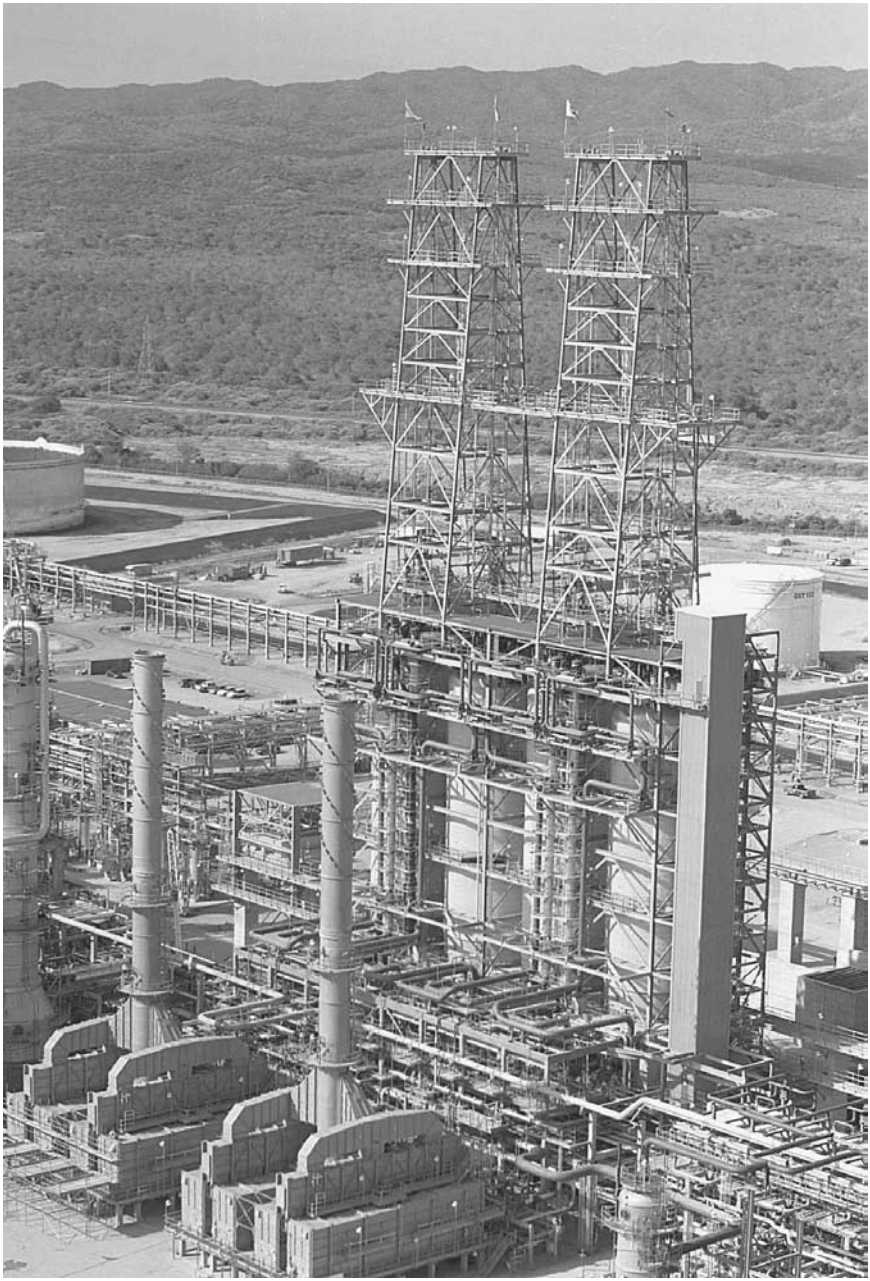

FIGURE 12.1.1 A ConocoPhillips-designed coker during construction phase. Location: Petrozuata's upgrader at Jose, Venezuela.

Downloaded from Digital Engineering Library @ McGraw-Hill (www.digitalengineeringlibrary.com)
Copyright © 2004 The McGraw-Hill Companies. All rights reserved.
Any use is subject to the Terms of Use as given at the website.

CONOCOPHILLIPS DELAYED COKING PROCESS

FIGURE 12.1.2 ConocoPhillips delayed cokers at Lake Charles, La. Structure on the left side of the photo is the fuel-grade coker. On the right is the premium coking unit.

TECHNOLOGY HIGHLIGHTS

The patented ConocoPhillips Delayed Coking Process offers licensees the following benefits:

- *Best qualified delayed coking licensor.* ConocoPhillips is the only licensor that designs, owns, and operates delayed cokers.
- *Most experienced team.* Fifteen delayed coking licenses worldwide in the last 10 years alone have been awarded to ConocoPhillips. The experienced engineering team utilizes operating and maintenance personnel from existing ConocoPhillips coking facilities to aid in design, construction, start-up, and optimization efforts.
- *Maximum coking capacity.* ConocoPhillips' ultralow coke drum cycle time operation and large coke drum diameter design, combined with other design advantages, help units achieve high unit throughput at a lower capital investment cost.
- *Higher liquid yields.* ConocoPhillips' patented Distillate Recycle, Zero Natural Recycle Technology, and other processes reduce coke yields while maximizing more valuable liquid products.
- *Improved safety.* ConocoPhillips is committed to personnel safety in all phases of design, start-up, and operation. Dedication to safety has recently generated several exciting improvements in the arenas of safety rationale and emergency egress strategy.
- *Greater operability and reliability.* Key information from internal coking facilities and recent licensees helps ConocoPhillips to continually improve unit on-stream factors and operations. Operations and maintenance personnel are integrally involved in the design and start-up phases for new and retrofit coker projects.

Downloaded from Digital Engineering Library @ McGraw-Hill (www.digitalengineeringlibrary.com)
Copyright © 2004 The McGraw-Hill Companies. All rights reserved.
Any use is subject to the Terms of Use as given at the website.

CONOCOPHILLIPS DELAYED COKING PROCESS

- *Complete life-cycle support.* Licensor services, in addition to design package development, include operating procedure draft/review, hands-on operator training at an existing facility, start-up assistance, access to unit operators and pilot-plant facilities, advanced control system evaluation, and continued technical support.
- *Ongoing technical development.* Delayed coking is a core business area for ConocoPhillips that emphasizes continued advancement of its already superior patented delayed coking process. Recent development projects have included coke drum life studies, safety interlock evaluations, coke fines removal methods, flash zone gas oil processing options, and asphaltene stability and coking propensity studies.

DESIGN STRATEGIES

In grassroots coker project development, it is critical to set the design basis to meet both the short- and long-term needs of the refinery. Considering the future likelihood to expand residual processing and coke handling capabilities in the initial design phases can save a plant significant lost-profit-opportunity and equipment costs. Having to replace major unit equipment (coke drums, fractionator, heater, coke handling, or coke storage facilities) during a turnaround will result in extended downtime and increased costs. This does not mean one should simply oversize all the equipment, but one should incorporate flexibility of operation in the original design and make key equipment choices with long-term goals in mind.

In recent projects and licensing proposals, ConocoPhillips has incorporated some unique long-term rationale into designs. For example, some locations intentionally leave plot space and specify design criteria around their coker to allow for easy placement of an additional pair of coke drums with minimal debottlenecking of existing assets. This is based upon future plans to construct either another sour crude train or other projects to make more coker feedstock available from existing refinery units. Additionally, these units gain the benefit of being on-line and generating earnings to help justify the future expansion projects. Some locations have installed a delayed coker to process atmospheric resid, then utilized the earnings to build a second coker train (furnace and coke drum sections) and vacuum unit where the coker then processes vacuum resid.

Another design improvement is to incorporate distillate recycle in the processing scheme, or to at least make the necessary alterations to the coker fractionator design so the recycle technology can be added at minimal cost later. The distillate recycle technology allows for greater flexibility in operating the unit. In addition to extending furnace run length and reducing coke yield, distillate recycle can be used to selectively increase the desired liquid products from the coker by varying the material circulated. Selective product yield maximization can allow the coker to adapt to fluctuations in product demands. Moreover, depending on refinery margins, it may sometimes be economical to back out some distillate recycle and utilize the reclaimed capacity to push more barrels of feed through the unit.

Some refineries are removing more gas oil from feedstocks upstream of their cokers by either utilizing deep-cut vacuum units or running pitch from existing solvent deasphalting (SDA) units in the coker charge. ConocoPhillips has successfully designed two newly constructed cokers that process high percentages (40 to 60 percent) of pitch in the unit feed. Utilizing pitch from an existing SDA facility can increase overall refinery economics by adding another upgrading source option. Additionally, this can have a positive impact on regional purchased asphalt market demands.

Other refiners are operating and/or designing their cokers for a blocked out type of operation. With this strategy plants are able to process fuel- and anode-grade coke feedstocks to maximize earnings from market fluctuations. For example, a coker unit will

Downloaded from Digital Engineering Library @ McGraw-Hill (www.digitalengineeringlibrary.com)
Copyright © 2004 The McGraw-Hill Companies. All rights reserved.
Any use is subject to the Terms of Use as given at the website.

CONOCOPHILLIPS DELAYED COKING PROCESS

process sour resids for fuel coke production for a specified time frame and then switch to run sweet resids to make anode coke. When margins for running advantaged crudes in the refinery slate overwhelm the margin and net-backs from anode coke production, it is more economical to operate only a fuel coking operation. This of course assumes the refinery is not sweet-crude-constrained because of asset metallurgy and/or crude availability.

FEEDSTOCKS AND TYPES OF COKE PRODUCTS

The most common feedstock to a delayed coker is vacuum resid. However, other heavy oil streams can also be utilized as coker feed, such as visbroken tar, atmospheric resid, slurry oil, hydrotreated resids, tar sands, and SDA or ROSE unit pitches. The composition of the feedstock has significant impact on the quality of coke produced. Essentially all the heavy metals in the coker charge are incorporated as contaminants in the coke. The sulfur and nitrogen compounds react to form a wide range of compounds and distribute throughout the product slate and in the offgas. The quality of petroleum coke is classified into three broad categories: fuel grade, anode, and premium coke (sometimes referred to as needle coke). Both the anode and premium grades of coke are typically further upgraded in a calciner.

Types of Calcinable Coke

Calcining is the process whereby petroleum coke is subjected to high temperatures (approximately 2400°F) in a reducing atmosphere to liberate methyl groups and hydrogen that are attached to aromatic rings. The calcined coke produced is nearly pure carbon with very low hydrogen content. This dense coke product possesses several desirable properties for industrial applications. Calcining both reduces the moisture and volatile matter content of the coke and improves the physical characteristics of the coke. Properly calcined coke has good physical strength and high electrical conductivity, which are critical for use in the aluminum and steel industries. Regardless of specific coke grade, petroleum coke that has not undergone the calcining process is referred to as green coke. Figure 12.1.3 shows a typical rotary kiln style of calciner.

Anode Grade

The primary use for calcined coke is in the aluminum smelting process, with 12,000,000 tons/yr of anode-grade coke produced worldwide. Calcined coke is combined with pitch and formed into anodes for the electrolytic dissociation of aluminum from alumina (Al_2O_3). Carbon is consumed in the smelting process by combining with the liberated oxygen, forming carbon dioxide (CO_2). Calcining improves the properties of the petroleum coke by removing volatile matter and by improving the electrical conductivity of the coke. Trace elements in the calcined coke are detrimental to the operation of the aluminum cells and reduce the purity of the final aluminum product. From a refining standpoint, the properties listed in Table 12.1.1 are important for coke that is to be calcined into anode-grade coke.

Calcining facilities typically blend cokes from various sources to meet the specifications of their aluminum company customers. In Table 12.1.1, the column entitled "Typical properties" is the approximate purity of calcined feedstock required to make an acceptable calcined coke. The column labeled "Approximate maximum properties" is an estimate of the maximum impurity levels that can be tolerated and still be blended with other higher-

Downloaded from Digital Engineering Library @ McGraw-Hill (www.digitalengineeringlibrary.com)
Copyright © 2004 The McGraw-Hill Companies. All rights reserved.
Any use is subject to the Terms of Use as given at the website.

CONOCOPHILLIPS DELAYED COKING PROCESS

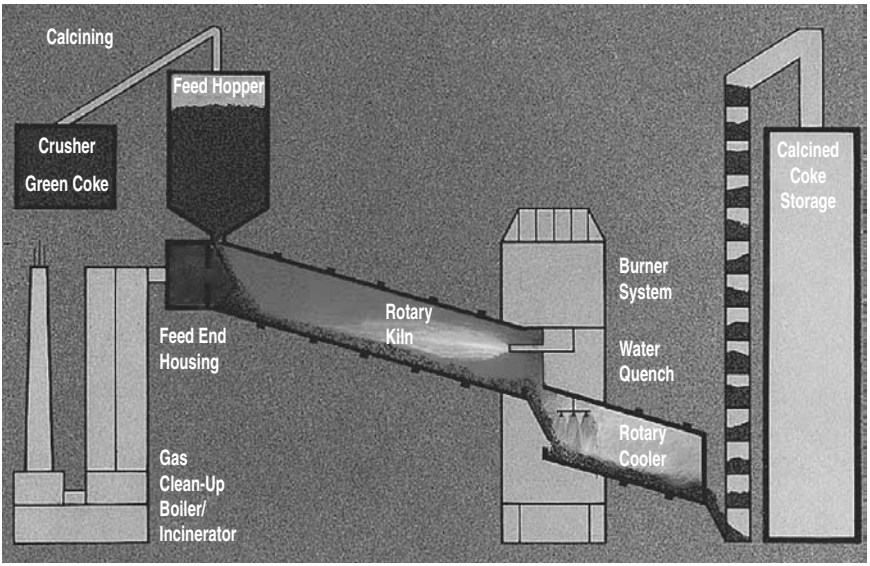

FIGURE 12.1.3 Typical rotary kiln calciner arrangement.

TABLE 12.1.1 Anode-Grade Coke Properties

	Typical properties	Approximate maximum properties
Sulfur, wt %	<3.0	<5.0
Volatile matter, wt %	<11.5	<12.5
Vanadium, ppm	<250	<400
Nickel, ppm	<150	<250
Iron, ppm	<200	<350
Calcium, ppm	<100	<200
Sodium, ppm	<100	<200
Silicon, ppm	<150	<200
Structure	No shot coke content	No shot coke content

purity cokes to make a calcined product acceptable to smelters. The actual maximum quantity of impurities permissible for a particular anode blendstock depends upon the ability of the aluminum smelter customer to tolerate impurities, and on the purity of other petroleum cokes available to the calciner operator for blending.

Titanium Dioxide (TiO_2) Grade

Calcined petroleum coke is also used in the reduction of titanium sands in the chloride process for producing TiO_2. TiO_2 is the white pigment used in a variety of applications, such as paint production and the whitewalls in tire manufacturing. Between 700,000 and 800,000 tons/yr of TiO_2 coke is produced worldwide. Calcined coke used in this applica-

Downloaded from Digital Engineering Library @ McGraw-Hill (www.digitalengineeringlibrary.com)
Copyright © 2004 The McGraw-Hill Companies. All rights reserved.
Any use is subject to the Terms of Use as given at the website.

tion has less severe metal contaminant restrictions. Most petroleum cokes meet the metal contaminant specifications; therefore, the important properties are

1. Sulfur content, which is determined by the crude oil charged to a refinery
2. Particle sizing and hydrogen content, which are controlled by the calcining process

Lower concentrations of both sulfur and hydrogen are desired in coke. Some petroleum cokes may naturally meet the sizing requirements for TiO_2 plants after being calcined, while others will require either crushing or screening to remove fines, or both. Typical sulfur content values range between 0.8 and 4.5 percent. The permissible sulfur content is determined by the sulfur removal equipment employed in the TiO_2 process along with environmental permit restrictions of the TiO_2 plant.

Other Calcined Coke Applications

Other applications for calcined coke include increasing the carbon content for steel and cast iron, feedstock for petrochemical-grade CO production, and as reducing agents for a variety of metal purification processes. These markets combined annually account for 2,000,000 tons of calcined coke production. Typically the coke must be calcined to remove moisture and volatile matter. Sulfur content is most often the controlling parameter to determine whether a petroleum coke is suitable for calcining into these markets. Often the application of calcined coke in this category is in small quantities; therefore crushing, screening, and bagging may be required before the calcined coke is suitable for the customer use.

Noncalcinable or Fuel-Grade Coke

Generally, coke which is not suitable for calcining is burned as fuel. The worldwide market for fuel-grade coke is 50,000,000 tons/yr. Fuel-grade coke competes with other fuels, primarily coal. Fuel coke has several advantages and some significant disadvantages compared to coal. The primary advantage is that petroleum coke has a higher heating value than coal. Coke typically has a heating value of 14,000 Btu/lb while coal varies between 8000 and 12,000 Btu/lb. As would be expected, the ash content of petroleum coke is much lower, generally 0.5 to 1.0 wt % ash. Coal from various sources can be between 2 and 20 wt % ash. The composition of the ash may be of concern to certain boiler configurations since coke ash can contain significantly higher vanadium content than coal ash.

The main disadvantages of petroleum coke relative to coal are higher sulfur, lower volatile matter content, and sometimes increased hardness. Coke produced from high-sulfur crude oils generally falls between 4 and 7 wt % sulfur, while economically marketed coal has typically under 2 wt % sulfur. Depending upon the sulfur removal equipment installed at a power plant, the higher sulfur may limit coke usage. Likewise, burner design may require a higher-volatile-matter solid fuel to maintain a stable flame. Additionally, crushing equipment may limit the hardness of the solid fuel that can be burned at a particular facility. A relative hardness is determined in reference to the Hardgrove Grindability Index (HGI). This is an index of how easily coal or coke can be pulverized for use in power plants. A low HGI (less than 50) is considered hard to pulverize.

Another important use of fuel-grade coke is in cement kilns. The limestone used to make cement can absorb sulfur and metals; therefore these contaminants in fuel coke are generally of less concern in kilns than in a power plant operation. The limiting factor in cement kiln usage of petroleum coke is generally the ability of the plant's grinding equipment to pulverize the coke.

Downloaded from Digital Engineering Library @ McGraw-Hill (www.digitalengineeringlibrary.com)
Copyright © 2004 The McGraw-Hill Companies. All rights reserved.
Any use is subject to the Terms of Use as given at the website.

CONOCOPHILLIPS DELAYED COKING PROCESS

COKER CHEMISTRY AND YIELDS

Chemistry

A delayed coker's vacuum residue feedstock typically consists of several types of components. The heaviest and most difficult components to process are the asphaltenes, which are high-molecular-weight, relatively high-aromaticity molecules that often contain a relatively high level of metals. Other major constituents of the residue feed are resins, or long-chain heavy hydrocarbons of intermediate aromaticity that solubilize the asphaltenes. The resins are heavy gas oils that boil above 800°F, and contain organic sulfur, nitrogen, and heavy metal compounds. The delayed coker thermally breaks down or cracks these components into lighter, higher-valued liquid and gaseous products, while subsequently leaving the heaviest of the materials as solid coke. This overall process is extremely endothermic, thus requiring heat input for completion.

The coking process consists of thermal cracking, condensation, and polymerization reactions that occur both in sequence and simultaneously. The coker furnace supplies the necessary heat to initiate vaporization and cracking, while the actual cracking and polymerization reactions are completed in the coke drum, thus the term *delayed coking.* The high-molecular-weight gas oils and asphaltene compounds are cracked into smaller hydrocarbons and heavy carbon products (coke). The light intermediate products formed during the cracking process are further cracked, producing low-molecular-weight compounds, such as hydrogen, a wide range of other light gases, and light liquids in the gasoline and distillate boiling range. Due to high coke drum temperatures, the vaporized liquids and gas products pass overhead to the fractionator, leaving the solid coke in the drum. The structure of the green coke product is dependent upon the residue or feedstock recipe sent to the coker.

Yields Estimation

Before ConocoPhillips implemented its coke licensing business, extensive pilot-plant studies were performed on a wide variety of residue qualities and types. Small-scale coker pilot-plant results were compiled to create an extensive empirical model for developing coke yield, gas and liquid product rates, and properties. This enabled generation of a meaningful coker yields prediction model, which benefits licensees in various types of technology studies today.

ConocoPhillips utilizes this unique coker yield model to economically design new units as well as optimize existing facilities. Combining distillate recycle and zero natural recycle technologies generates superior liquid yields in comparison to conventional coking practices. Coke yield is reduced by 1 to 3 wt % when operating with 20 percent distillate recycle, depending upon feedstock properties. Coke yield is further minimized (by another 0.5 to 1 wt %) by cutting natural recycle from 5 percent to zero. Table 12.1.2 compares the ConocoPhillips coking process yields for three different residue types against conventional delayed coking technology yields.

The ConocoPhillips yields in Table 12.1.2 represent those obtained when utilizing 20 percent light coker gas oil (LCGO) as the distillate recycle material. LCGO is typically selected for the recycle material when the economics of product values and refinery configuration favor gasoline production. In regions where kerosene and diesel production is more economical, it is more profitable to maximize distillate and reduce gas oil yields in the coker. In this marketing scenario and using ConocoPhillips' patented distillate recycle technology, a higher-boiling-range material would be used for recycle. Table 12.1.3 highlights coker product yields using a heavy coker gas oil (HCGO) distillate recycle stream with the same feedstock properties as listed in Table 12.1.2. As illustrated by Tables 12.1.2

Downloaded from Digital Engineering Library @ McGraw-Hill (www.digitalengineeringlibrary.com)
Copyright © 2004 The McGraw-Hill Companies. All rights reserved.
Any use is subject to the Terms of Use as given at the website.

TABLE 12.1.2 ConocoPhillips Delayed Coking Yield Advantage versus Conventional Coking

Residual Feed	U.S. Central 1050°F +		Middle Eastern 1050°F +		South American 1050°F +	
Pressure, lb/in^2 gage	15		15		15	
Gravity, °API	9.70		5.64		1.50	
UOP K factor	11.51		11.54		11.14	
CCR, wt %	15.43		22.96		24.47	
Product yields, wt %	ConocoPhillips	Conventional	ConocoPhillips	Conventional	ConocoPhillips	Conventional
C_4 and lighter	8.6	6.9	11.1	9.6	10.2	8.6
C_5–335°F	10.7	10.0	12.5	11.8	11.4	10.8
335–510°F	8.8	10.8	9.8	11.5	8.4	10.1
510–650°F	10.0	13.3	7.6	10.7	7.1	10.4
650°F+	42.1	35.8	30.7	25.5	32.5	26.8
Coke	19.9	23.2	28.3	30.8	30.4	33.3

Downloaded from Digital Engineering Library @ McGraw-Hill (www.digitalengineeringlibrary.com)
Copyright © 2004 The McGraw-Hill Companies. All rights reserved.
Any use is subject to the Terms of Use as given at the website.

CONOCOPHILLIPS DELAYED COKING PROCESS

TABLE 12.1.3 ConocoPhillips Delayed Coking Yields Using an HCGO Recycle Stream to Maximize Kerosene and Diesel Production

Product yields, wt %	U.S. Central residue	Middle Eastern residue	South American residue
C_4 and lighter	8.3	10.8	9.8
C_5–335°F	10.7	12.5	11.4
335–510°F	11.0	12.0	10.7
510–650°F	14.7	12.4	11.9
650°F+	34.8	23.4	25.2
Coke	20.6	28.9	31.1

and 12.1.3, using ConocoPhillips' recycle technology can increase the flexibility of coker operations.

Liquid Product Properties

In addition to unit yields generation, the ConocoPhillips coker modeling program produces good product property summaries that match commercial operation. This tool can help plants enhance operating performance of the entire refinery by being able to more accurately estimate the impact that coker products will have on downstream units, i.e., catalytic crackers, hydrotreaters, blending units, and storage facilities.

The coker model provides estimates of the butane (C_4) and lighter product yields and composition. The pentane (C_5) and heavier liquid yields are segregated into a maximum of five categories. The exact liquid cuts are tailored to meet the specific boiling point ranges of the products for a given coking unit. Table 12.1.4 is an example of the C_5+ product property summary that would be produced for the ConocoPhillips Middle East residue case shown in Table 12.1.2. In addition to the typical gravity, UOP K factor, sulfur, and nitrogen characteristics of the products, other key properties are provided, such as cetane index, smoke point, refractive index, and Conradson carbon. One example of the importance of evaluating coker products in relation to downstream units is the refractive index (RI) of the gas oil. Streams with high RI are more aromatic, and FCC feedstocks with high aromaticity will decrease the overall FCC unit conversion.

The ConocoPhillips coker model has several additional design features; one key functionality is linkage to a liquid cut pseudocomponent generation program. This enables us to expand the five C_5+ liquid products into 50 boiling-range components for assimilation into process simulation programs. ConocoPhillips accurately develops unit design and optimization simulations on licensee cokers. Recent research and development efforts have been focused on improving the modeling of the flash zone area of the coker fractionator. This has proved essential in providing users with a useful tool for defining fractionation capabilities within the coker and evaluating advanced process control schemes.

PROCESS DESCRIPTION

The process technology described in this section highlights the ConocoPhillips coking process, which incorporates patented features that enhance liquid yields and the operability of delayed cokers. The entire coking process is typically grouped into three general

Downloaded from Digital Engineering Library @ McGraw-Hill (www.digitalengineeringlibrary.com)
Copyright © 2004 The McGraw-Hill Companies. All rights reserved.
Any use is subject to the Terms of Use as given at the website.

CONOCOPHILLIPS DELAYED COKING PROCESS

TABLE 12.1.4 Coke and Liquid Product Properties for ConocoPhillips Technology Yields from Middle East Residual

Product property summary—Middle East residue			
Naphtha (C_5–335°F)			
Gravity, °API	63.46	Viscosity (at 100°F), cs	0.54
UOP K factor	12.05	Parafin, vol %	37.3
Total sulfur, wt %	0.42	Olefin, vol %	41.6
Total nitrogen, ppm	61	Naphthene, vol %	10.7
RON	71.3	Aromatic, vol %	10.3
MON	64.8	Bromine number	66.8
Light distillate (335–510°F)			
Gravity, °API	39.15	Viscosity (at 100°F), cs	1.64
UOP K factor	11.57	Cetane index	39.9
Total sulfur, wt %	0.81	Pour point, °F	−64.9
Total nitrogen, ppm	251	Smoke point, mm	18.3
Bromine number	36.8	Aniline point	124.1
Refractive index	1.4713		
Heavy distillate (510–650°F)			
Gravity, °API	27.46	Viscosity (at 100°F), cs	5.13
UOP K factor	11.38	Cetane index	41.9
Total sulfur, wt %	1.47	Pour point, °F	22.8
Total nitrogen, ppm	718	Smoke point, mm	10.5
Bromine number	22.4	Aniline point	136.5
Refractive index	1.5041		
Heavy gas oil (650°F+)			
Gravity, °API	18.29	Viscosity (at 212°F), cs	4.70
UOP K factor	11.28	Total sulfur, wt %	2.20
Bromine number	12.0	Aniline point	158.6
Refractive index	1.5366	Conradson carbon, wt %	0.70
Total nitrogen, ppm	2230		
Green coke			
Volatile matter, wt %	9.44	Total nitrogen, wt %	0.65
Sulfur, wt %	5.50	Ash content, wt %	<0.2
Vanadium, ppm	308	Nickel, ppm	85

sections—furnace and fractionation, coke drum and coke handling, and the closed blowdown areas—with the major equipment highlights. The exact configuration will vary depending upon refinery's specific design strategy and existing processing capabilities.

Furnace Fractionation Area

Figure 12.1.4 is a simplified process flow diagram for a typical furnace and fractionation portion of a two-coke-drum unit.

Feed Preheat

Coker feed can be a blend of one or more feedstocks, such as vacuum residues, atmospheric residue, or pitch. This fresh feed mixture enters the unit via storage or directly from

Downloaded from Digital Engineering Library @ McGraw-Hill (www.digitalengineeringlibrary.com)
Copyright © 2004 The McGraw-Hill Companies. All rights reserved.
Any use is subject to the Terms of Use as given at the website.

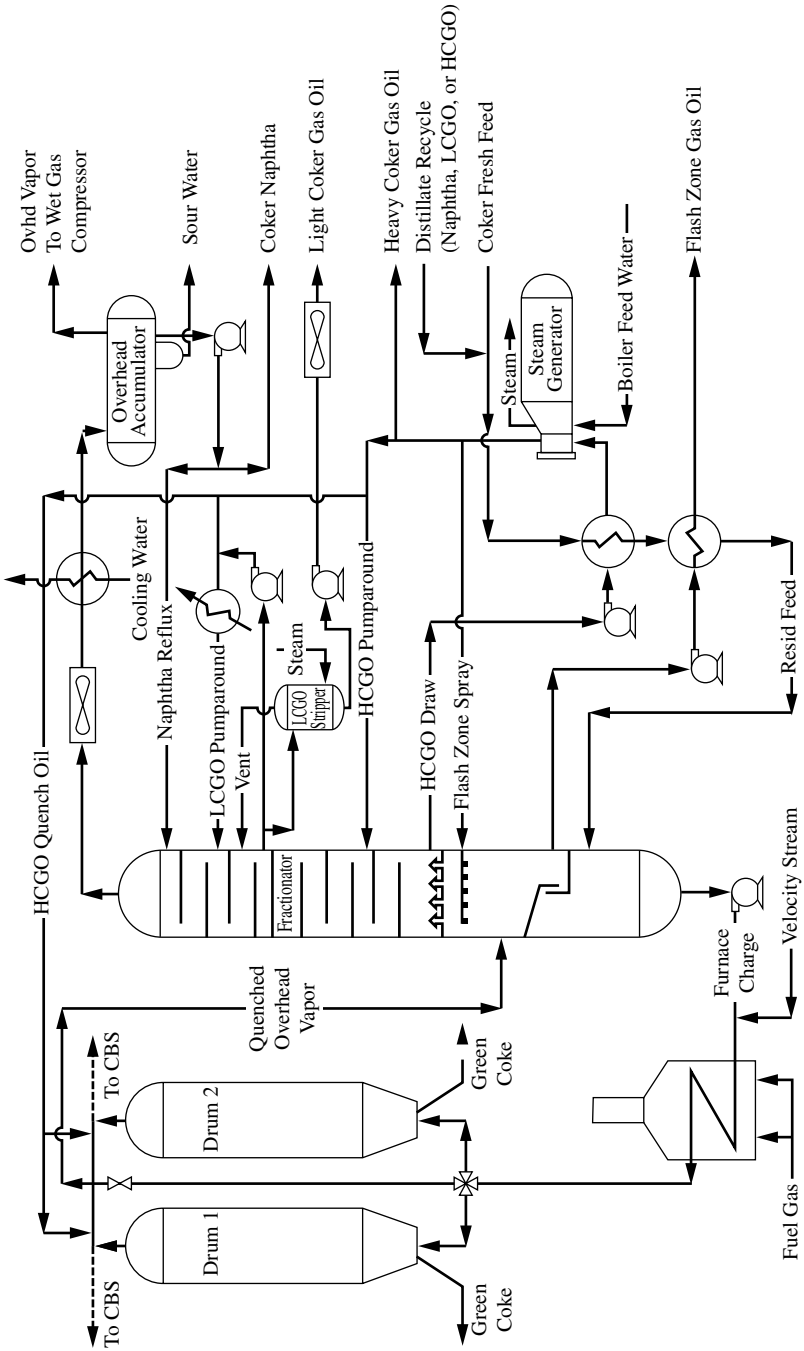

FIGURE 12.1.4 Process flow diagram for typical delayed coking furnace/fractionation sections.

Downloaded from Digital Engineering Library @ McGraw-Hill (www.digitalengineeringlibrary.com)
Copyright © 2004 The McGraw-Hill Companies. All rights reserved.
Any use is subject to the Terms of Use as given at the website.

CONOCOPHILLIPS DELAYED COKING PROCESS

other processing units. A light or heavy distillate recycle material is usually combined with the feed prior to the furnace and preheating train. When a naphtha-boiling-range material is used for distillate recycle, it must be added downstream of the furnace charge pumps to avoid flashing in the bottom of the fractionator. For grassroots designs, ConocoPhillips typically recommends 15 to 20 vol % recycle in comparison to the fresh feed rate. A naphtha, distillate, or gas oil product from the coker fractionator can be utilized for recycle depending upon the desired product slate. For example, operating with a gas oil recycle stream shifts the unit yields toward more diesel production than if a diesel-boiling-range material were used for distillate recycle. The flexibility in the distillate recycle technology allows refiners to capitalize upon seasonal market fluctuations and future expansion objectives.

The fresh feed plus distillate recycle is routed through the feed preheat exchanger train to maximize the heat recovery from the fractionator pumparound and product gas oil streams. Through the preheat exchanger train, the residue is normally heated to 530 to 600°F. The exact exchanger arrangement is evaluated by using a pinch-type analysis to optimally design the preheat exchanger flow scheme. This economic strategy evaluates when it is more profitable to design heat input from additional heat exchange versus furnace capacity. The preheated residue is sent to the bottom of the coker fractionator (just below the flash zone area), which acts as a surge drum for the unit and allows for uniform flow into the furnace charge pumps.

Furnace

The state-of-the-art design for new coker furnaces is a double-fired, horizontal cabin configuration with air preheat. Fuel firing control is used to target coil outlet temperatures ranging from 920 to 945°F. Either high-pressure steam or boiler feedwater is injected into each of the furnace coils to help maintain the optimum velocity and residence time in the furnace tubes. High velocity and low residence time suppress coke formation in the tubes. The air preheater increases the overall efficiency of the furnace system. Combustion air is preheated via exchange with the stack gases, then distributed to the burners through insulated ducts. The double-fired design is preferred over single-fired because of the higher allowable heat flux and shorter in-tube residence times, which help to improve furnace run lengths when processing heavy feedstocks.

Since the furnace is one of the key pieces of equipment in a delayed coker, ConocoPhillips has developed a sophisticated computer program for modeling the process side conditions. The furnace program accurately calculates the amount of cracking and vaporization at each tube in the coker furnace, plus other critical design factors as shown in Fig. 12.1.5. This program has been successfully used in conjunction with commercial operating data to design new furnaces, debottleneck existing furnaces, and evaluate the effects of feed and operating changes on the coking process. This process side knowledge is coupled with other critical mechanical design features, such as tube metallurgical design for longevity and optimum firebox configuration, to ensure the selected furnace vendor/contractor will construct the most efficient coker furnace in grassroot applications.

The furnace modeling tool also helps quantify the benefits from distillate recycle on furnace operations. The distillate recycle stream promotes vaporization during the coking process. In the furnace the increased vaporization also raises the tube velocity, which in turn decreases the total residence time of the feed above 800°F inside the furnace. The goal is to reduce the total time in the furnace above this temperature to limit coke laydown inside the tubes, thus extending furnace run length.

As coke deposits in the furnace tubes over time, the furnace must fire harder to maintain the same outlet process temperature. Eventually the coke accumulations will cause the

Downloaded from Digital Engineering Library @ McGraw-Hill (www.digitalengineeringlibrary.com)
Copyright © 2004 The McGraw-Hill Companies. All rights reserved.
Any use is subject to the Terms of Use as given at the website.

CONOCOPHILLIPS DELAYED COKING PROCESS

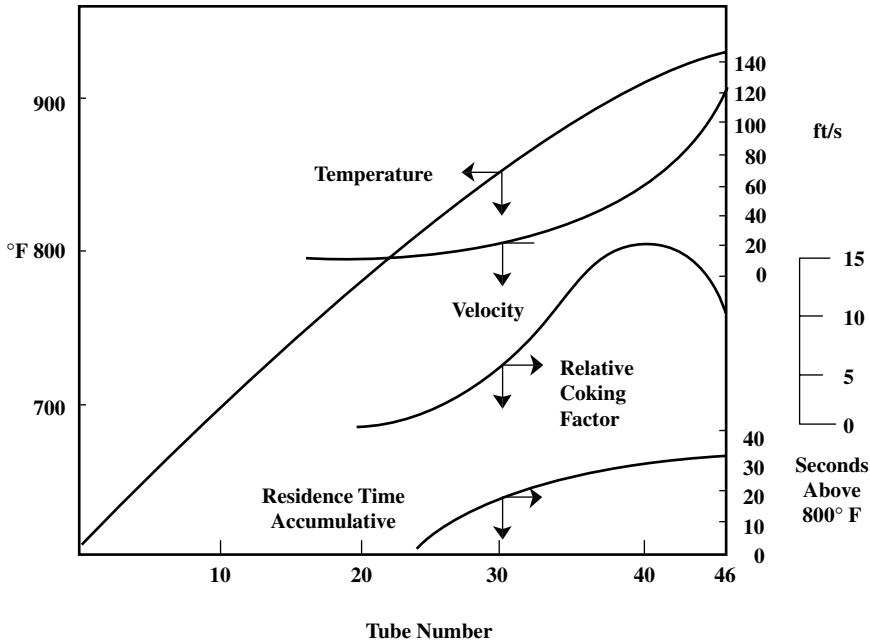

FIGURE 12.1.5 Coker furnace tube-by-tube process trend results.

furnace to experience either a high pressure drop, requiring a reduction in charge rate, or high tube skin temperatures that approach the furnace safe operating limits. The furnace must then be decoked. The maximum safe tube skin temperature is determined by metallurgy, tube and return bend thickness, and type of decoking method utilized. The three decoking methods are steam-air decoking, mechanical pigging, and on-line spalling. ConocoPhillips refineries have extensive experience in all three decoking methods and can help licensees evaluate the best methods for their specific unit. Refer to the "Operations and Maintenance" section for more details regarding decoking methods.

Fractionation

The furnace effluent flows to the on-line coke drum where time, temperature, and pressure conditions impact the conversion of the feed into coke and hydrocarbon vapors. Newer designed coke drums generally operate at 15 to 25 lb/in^2 gage and 820 to 845°F drum overhead temperature. Operating at low drum overhead pressures decreases the coke yield for a given feedstock. Operating at high coke drum temperatures further decreases coke yield. Utilizing ConocoPhillips patented technology and operational experience has enhanced operating performance significantly, allowing refiners to run higher coke drum overhead temperatures at a lower furnace outlet temperature.

The hydrocarbon vapors exit the coke drum via the overhead vapor line. The drum vapor stream is quenched with cooled heavy coker gas oil (HCGO) to stop the reaction and retard coke buildup in the overhead line. A good postquench target temperature range is 790 to 810°F. The quenched vapor enters the fractionator [above the flash zone gas oil

Downloaded from Digital Engineering Library @ McGraw-Hill (www.digitalengineeringlibrary.com)
Copyright © 2004 The McGraw-Hill Companies. All rights reserved.
Any use is subject to the Terms of Use as given at the website.

CONOCOPHILLIPS DELAYED COKING PROCESS

(FZGO) draw tray] in the bottom section or flash zone, and HCGO is sprayed into the top of the flash zone area to help cool and condense the heaviest hydrocarbons, plus knock down any entrained coke fines and heavy liquid from the upward-flowing vapors.

The specially designed and patented ConocoPhillips Flash Zone Gas Oil Draw Tray extracts the heaviest portion of the gas oil and prevents it from falling to the bottom of the fractionator and mixing with the fresh feed. Conventional coker designs use the FZGO (or natural recycle) to improve operability in the furnace. However, recycling this heavy liquid through the furnace increases coke production and decreases the more valuable liquid coker yields. With the distillate recycle technology there may not be a need to utilize natural recycle for furnace operability.

The distillation range of the FZGO coker product stream has been proved as an acceptable feed for FCC and vacuum units, and as a fuel oil blending component. Figure 12.1.6 shows a typical FZGO distillation from a ConocoPhillips facility. Additionally, the FZGO stream can be processed through ConocoPhillips' patented and proprietary cleanup system to remove coke fines. This cleaned FZGO stream is then suitable for processing in a gas oil hydrotreating (GOHDS) unit, further increasing refinery yields. Routing the FZGO outside the column for the purpose of using it for natural recycle provides for a continuous coke fines removal operation, and additionally enables the unit to accurately determine the true natural recycle rate. Some cokers also include a coke strainer system off the bottom of the coker fractionator. Prevention of fines buildup in the fractionator is critical for improving unit run length between turnarounds.

Above the flash zone area of the column, the vapors are cooled and condensed through typical fractionator operations to produce a wet gas and typically three liquid products. The boiling-range cutpoint specifications for the coker naphtha, distillate (also called light coker gas oil), and heavy coker gas oil products set the fractionator overhead and draw tray temperatures. From a design perspective, it is usually more economical to remove as much heat as possible in the heavy coker gas oil section because there is greater temperature driving force for heat recovery to the residue feedstock. On both the heavy and light coker

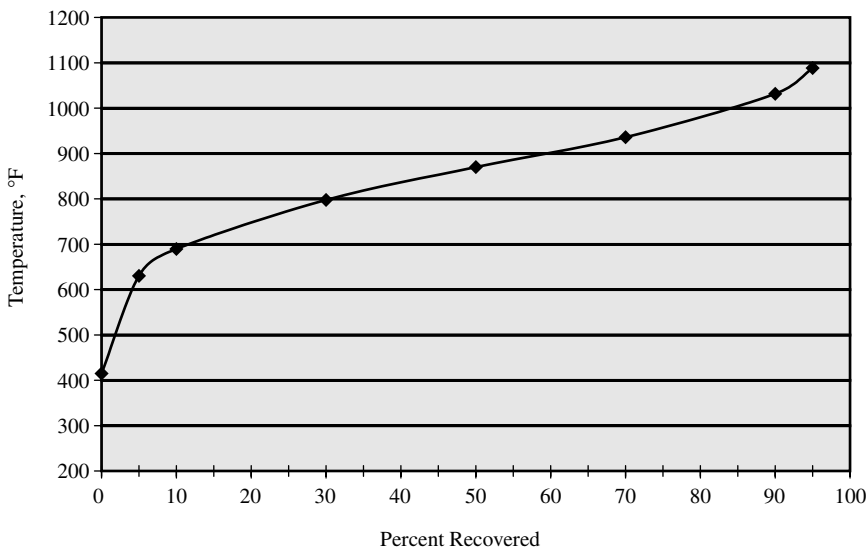

FIGURE 12.1.6 D-2887 distillation data for typical FZGO stream.

Downloaded from Digital Engineering Library @ McGraw-Hill (www.digitalengineeringlibrary.com)
Copyright © 2004 The McGraw-Hill Companies. All rights reserved.
Any use is subject to the Terms of Use as given at the website.

CONOCOPHILLIPS DELAYED COKING PROCESS

product streams, refiners may consider constructing new units with steam strippers. The primary purpose of the side strippers is to remove the lightest boiling-range material from the given gas oil stream to control the product flash point. This can help meet vapor pressure specifications, improve operation of hydrotreaters and other downstream processing units, and increase the flexibility for sending the intermediate products directly to storage, as necessary.

Coker fractionators are different from other refinery distillation columns in two significant aspects. First, there is no bottom reboiler. All the heat duty input to the column comes from the coke drums with the tower feed being essentially all in the vapor phase. Second, since delayed coking is a semibatch process, the fractionator operates continuously, but experiences periodic feed rate swings due to the normal batch processing of the coke drum cycles.

Coke Drum and Coke Handling Area

Coke Drum. The coke drums serve two primary purposes: to provide reaction time to allow the coking reactions to reach completion and to collect the subsequent solid coke formed. Coke accumulates in the drum, forming a densely packed coke bed. At a predetermined drum level, the furnace effluent is directed through a switch valve from the full drum into the other prewarmed drum. While one coke drum is being filled for a fixed cycle time, the other coke drum undergoes the cooling, cutting, and drum preparation steps. Figure 12.1.7 depicts the complete cycle steps a coke drum undergoes during the coking and decoking process.

Coke is hydraulically removed from the drum using a jet water pump, which produces a high-pressure (2500 to 4500 lb/in^2 gage) and high-volumetric-flow (900 to 1300 gal/min) water stream. Most cokers today use a combination tool, or two-mode drill bit, that first drills the pilot hole and then switches modes to cut the remainder of the coke from that drum. The cutting water and coke flow from the bottom of the drum, through the coke shroud, and into the coke handling area.

ConocoPhillips typically recommends licensees begin operating fuel and anode cokers with a 16- to 18-h fill cycle. Through special operating practices and drilling techniques, some of the ConocoPhillips experienced coking facilities operate at sustained 10-h fill cycles on both two- and four-drum units. Reducing cycle time enables higher feed rates to a delayed coker, increasing overall unit profitability.

Grassroots cokers are typically designed with larger coke drums than those found in older coking facilities. Coke drums are now up to 30 ft in diameter and 85 to 96 ft tall, tangent-to-tangent length. In addition to capacity, longevity of coke drum life is crucial in creating an optimal coker design. ConocoPhillips has developed proprietary mechanical coke drum wall thickness and skirt attachment rationale for coke drums to better withstand the extreme stresses experienced during the routine quenching and backwarming cycle steps. These improved design standards, coupled with strict adherence to operating and maintenance practices, have allowed the ConocoPhillips cokers to operate longer between drum replacements and to run more cycles per year than conventional cokers.

Coke Handling. There are several different arrangements for coke handling systems depending upon design preferences and the type of coke transportation method used, i.e., ship, truck, railcar, or conveyed directly to a calcining unit. ConocoPhillips incorporates several unique aspects in its coke handling systems that distinguish the specifications from other coking licensors. One key item is the design philosophy that ensures the coke handling system is *never* the limiting system in the delayed coker operation.

Downloaded from Digital Engineering Library @ McGraw-Hill (www.digitalengineeringlibrary.com)
Copyright © 2004 The McGraw-Hill Companies. All rights reserved.
Any use is subject to the Terms of Use as given at the website.

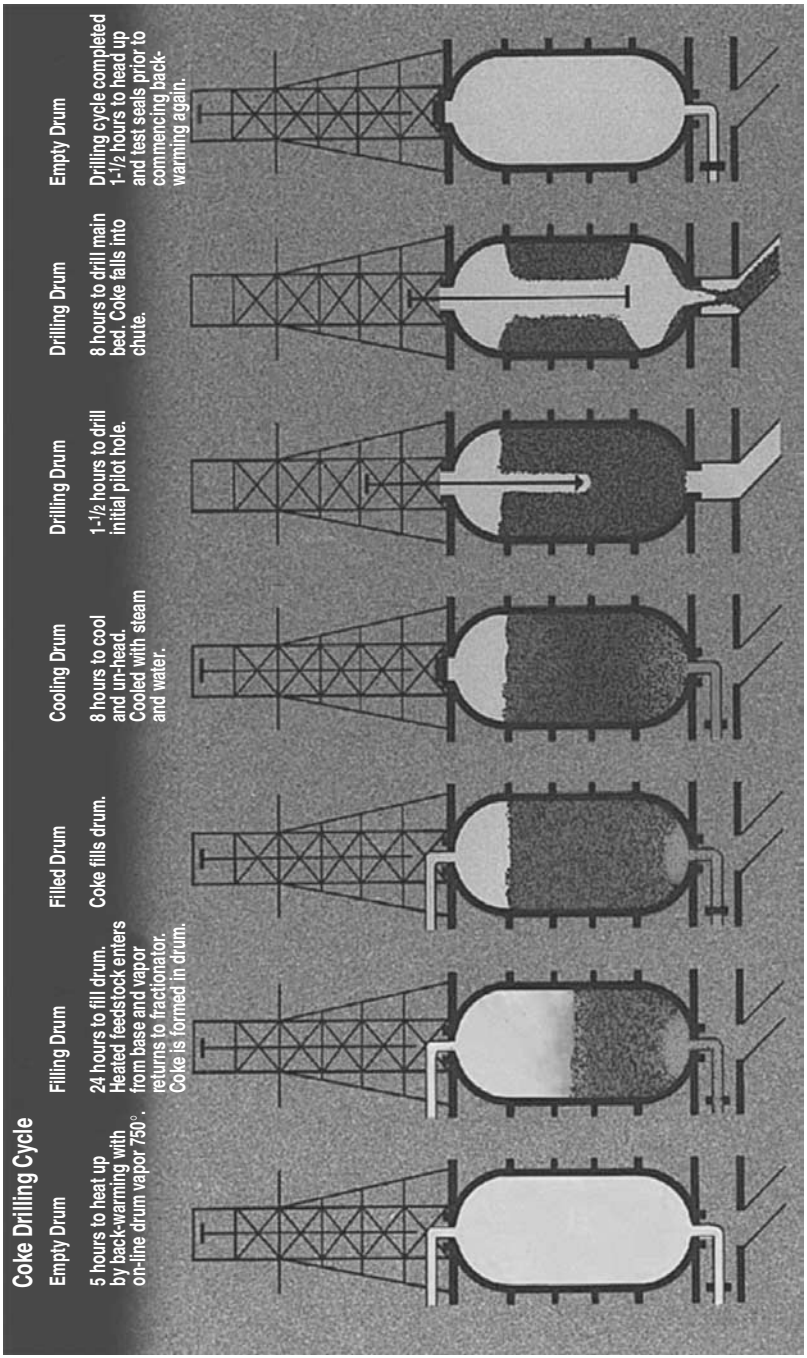

FIGURE 12.1.7 Coke drum drilling cycle, based upon a 24-h drum fill cycle operation.

Downloaded from Digital Engineering Library @ McGraw-Hill (www.digitalengineeringlibrary.com)
Copyright © 2004 The McGraw-Hill Companies. All rights reserved.
Any use is subject to the Terms of Use as given at the website.

CONOCOPHILLIPS DELAYED COKING PROCESS

For grassroots designs, this goal necessitates a pit-pad-crusher type of arrangement. The pit-pad system has a lower capital cost and maintenance costs than most other coke handling systems available on the market. Figure 12.1.8 is a photograph of a ConocoPhillips-designed facility in Venezuela with all the major design components highlighted.

Coke and cutting water fall through the coke shroud area and into the deep sluiceway pit. ConocoPhillips specifies a large cement pathway from the shroud to the pit rather than a smaller enclosed box chute design. The wide opening and sloped-wall design help to carry the coke out from under the bottom head. This is crucial in avoiding coke blockages and positioning the coke farther away from the drums so workers can safely move coke in the pit-pad area. It is also critical to minimize the distance from pit to coke drum skirt, which in turn reduces the overall height and lowers the cost of the coking structure. Water within the sluiceway pit flows toward the fines settling area, where it passes through a slotted wall into the settling basin. After the water is clarified, it is recycled to the jet water storage tank and reused in the cutting process.

An overhead bridge crane is used to lift coke from the sluiceway pit onto the dewatering pad. Cranes are the preferred mode for moving coke in the pit area for personnel safe-

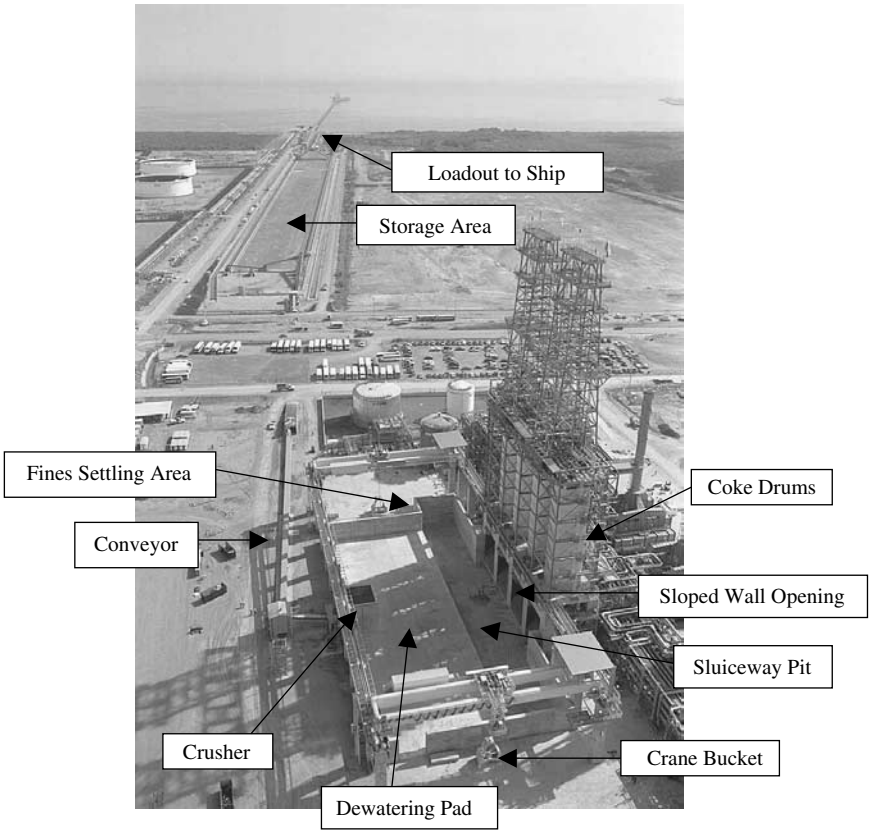

FIGURE 12.1.8 A photo of coke handling facility during construction at Petrozuata's upgrader at Jose, Venezuela.

Downloaded from Digital Engineering Library @ McGraw-Hill (www.digitalengineeringlibrary.com)
Copyright © 2004 The McGraw-Hill Companies. All rights reserved.
Any use is subject to the Terms of Use as given at the website.

CONOCOPHILLIPS DELAYED COKING PROCESS

ty reasons. It is more hazardous to have workers in the pit while drilling and draining drums. On a four-drum coker, a coke drum begins the drilling process as often as every 5 h. The wet coke is moved above the pad in a strictly managed method to segregate it from freshly cut coke until it has sufficiently drained. The crane then loads the crusher to break the large coke formations to the target maximum size. The crusher style is dependent upon the coke grade being produced within the coker unit as well as any calciner loading specifications. The crane is also utilized to periodically dip coke fines from the fines settling basin.

In Fig. 12.1.8, the crusher feeds belt conveyors that move coke out to the storage area. This particular coke storage facility is designed with a traveling boom stacker with portal reclaimer for loading onto ships and transport to market. Some facilities will also construct a storage silo for feeding coke directly into truck or railcar loading stations.

The sluiceway pit/dewatering pad is a unique trait to ConocoPhillips' coking process. Again, the key design strategy is to construct a unit that can be effectively operated and maintained so the coker never has to shut down or cut the feed rate due to coke handling problems. This is achieved through several design and operational best practices, some of which are as follows:

- The sluiceway pit can contain several full drums of cut coke in the event of crane or load-out system outages.
- The crane bucket is sized with enough catch-up capacity to allow for planned daily preventive maintenance.
- The dewatering pad sizing and pad logistic best practices allow for several days of coke surge capacity with the capability to still segregate the wet and dry coke.
- Typical coke pads are designed with one overhead crane and space to bring in a backup front-end loader, should the crane need major repairs.
- The belt conveying system to load-out is also designed with certain key mechanical best practices for increased reliability.

The coke handling system actually begins at the bottom head of the coke drum. The ConocoPhillips design is flexible enough to incorporate the client-preferred method of unheading. Due to the hazards associated with unheading coke drums, many operating companies are pursuing automated unheading systems. Several ConocoPhillips licensees have recently selected the Hahn and Clay systems. In addition to improving safety by removing the worker from the bottom drum area, the Hahn and Clay system is advantageous because it lowers the overall structure height and helps in handling shot coke. Other unheading devices can be provided at the client's preference. ConocoPhillips also dedicates technical personnel to continually evaluate new unheading system designs as they become commercially available.

Closed Blowdown System

Figure 12.1.4 in the furnace and fractionation process description shows where the coke drum overhead vapor line branches to reach the closed blowdown system (CBS). Figure 12.1.9 shows a simplified standard design for a ConocoPhillips closed blowdown system. The primary functions of the closed blowdown system are to maximize hydrocarbon and water recovery, to provide cooling for the coke drums, and to minimize air pollution during normal operations.

During the first step of the coke drum cooling process, steam is injected into the coke drum to strip residual hydrocarbon vapors from the full coke bed and into the coker frac-

Downloaded from Digital Engineering Library @ McGraw-Hill (www.digitalengineeringlibrary.com)
Copyright © 2004 The McGraw-Hill Companies. All rights reserved.
Any use is subject to the Terms of Use as given at the website.

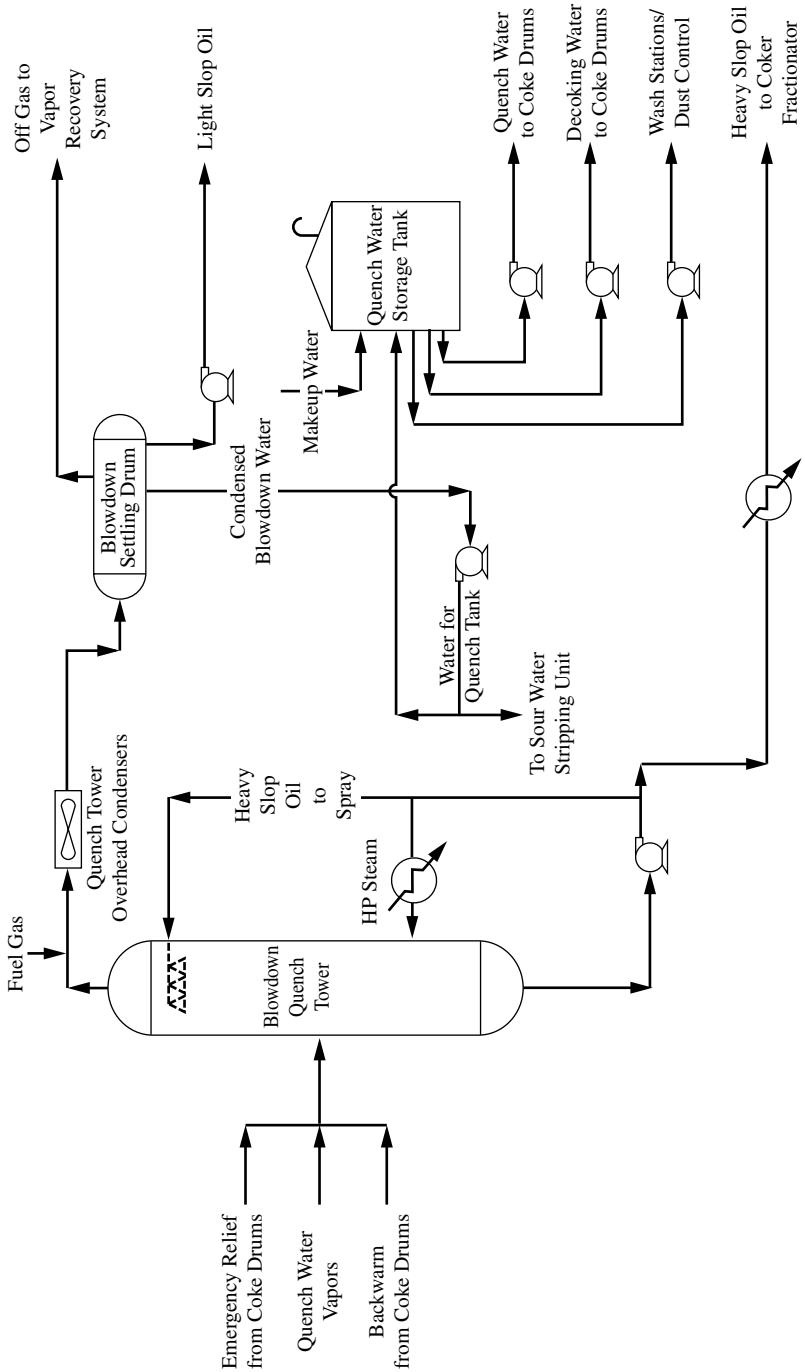

FIGURE 12.1.9 A simplified closed blowdown system process flow diagram.

Downloaded from Digital Engineering Library @ McGraw-Hill (www.digitalengineeringlibrary.com)
Copyright © 2004 The McGraw-Hill Companies. All rights reserved.
Any use is subject to the Terms of Use as given at the website.

CONOCOPHILLIPS DELAYED COKING PROCESS

tionation tower. After a specific duration of time, the steam and hydrocarbon vapors off the coke drum are routed to the quench tower in the blowdown system. The blowdown quench tower also receives hydrocarbon vapor from the coke drums during the backwarming stage of the normal drum cycle and in emergency relief scenarios.

In the quench tower, hot hydrocarbon vapors are sprayed with recycle slop oil streams to condense out the heaviest portion, called heavy slop oil. Portions of the heavy slop stream are recycled to the quench tower inlet and to the tower overhead spray header, while the remaining portion is further processed in the coker fractionator or other downstream units. The uncondensed vapor portion exits overhead of the quench tower for further cooling in the overhead condensers.

Water and any light hydrocarbons condensed in the overhead fin-fans are separated in the blowdown settling drum. The wet gas product stream is generally routed to a vapor recovery system to reclaim the hydrocarbons. All new designs tie the overhead settling drum line back to the coker fractionator overhead receiver. The light slop oil is often further processed in downstream units. The water product flows into the quench water storage tank or is sent to the sour water stripping unit.

Fresh water is added to the recycled water stream to provide sufficient supply to the water storage tank. This tank supplies water utilized during the quenching phase of the coke drum cycle, as decoking water for the jet water pump to cut and clean the coke drums, and water for the dry coke piles for dust control purposes as necessary.

OPERATIONS AND MAINTENANCE

Key information learned from extensive operating and licensing experience has enabled ConocoPhillips to design and operate delayed cokers for superior profitability. Technical personnel are continually receiving operating and maintenance feedback from the refineries. This depth of coking know-how is passed on to licensees in unit design packages, debottlenecking, and advanced control studies. This section highlights some of the numerous maintenance and operational issues encountered in modern delayed cokers.

Some licensees have chosen to process the refinery nonbiological sludges in the coker, such as desalter sludge, oily water sludge, tank bottoms, and various slop or sludge oils. One ConocoPhillips preferred design option is to inject sludge (called the waste addition step) during the off-line portion of the coking cycle. The waste addition step typically draws sludge from designated holding tanks for injection directly into the bottom of the coke drums during the appropriate portion of the quenching steps. Sludge coking is a very economical method for elimination of waste refining sludges.

One example of greater operability in ConocoPhillips cokers is the extended length between shutdowns. Internal coking facilities typically target to run longer than 5 years between major turnarounds. Limiting coke buildup in piping and equipment, other than the coke drums, is crucial for increasing unit run length. ConocoPhillips' patented flash zone gas oil draw system coupled with its proprietary fines removal system helps to remove residual coke particles and fines from the bottom section of the fractionator. When fines from the coke drum overhead vapor are allowed to accumulate in the fractionator, the bottom fines level will continually increase, eventually interrupting flow to the unit charge pumps. The coker then requires a shutdown to physically clean out the column and bring the furnace back on-line. Excessive coke laydown in the tower will foul column trays, thus reducing fractionation ability. Coke fines can be carried up the tower into the heavy coker gas oil product, causing downstream equipment plugging, i.e., filters or hydrotreater beds.

Other areas where coke buildup causes operational problems are in the furnace transfer line piping located between the furnace outlet and the coke drum inlet, and in the over-

Downloaded from Digital Engineering Library @ McGraw-Hill (www.digitalengineeringlibrary.com)
Copyright © 2004 The McGraw-Hill Companies. All rights reserved.
Any use is subject to the Terms of Use as given at the website.

CONOCOPHILLIPS DELAYED COKING PROCESS

head vapor line which runs from the top of the coke drum to the fractionator inlet. The plot plan should be evaluated early in the design process to help minimize total transfer line length and to establish proper geometry to reduce coking tendency. It is also important to design the transfer lines for easy cleanouts when needed. In the coke drum overhead transfer line, a quench oil stream is injected into the vapor line to stop the coking reactions from occurring in the overhead system. Operating the after-quench temperature from 790 to 810°F will aid in reducing coke forming in this line.

Another cause of coke formation in the overhead vapor line is from an operational upset known as coke drum foamover. A foamover occurs when the coke drum is overfilled, pushing the reacting liquid and/or coke through the overhead vapor line into the fractionator. The liquid phase then solidifies in the line and portions of the fractionator, resulting in a costly and time-intensive cleanup process. To help mitigate this hazard, some refiners are installing continuous level indication on the upper portion of the coke drums. The goal is to help operators determine the foam or reacting vapor/liquid layer height to better control carryover. ConocoPhillips also recommends periodically reviewing antifoam manufactures and additive types to optimize the chemical addition rates and limit downstream unit silicon contamination.

Several ConocoPhillips cokers are utilizing on-line spalling to decoke their furnaces between turnarounds and/or as an alternative process between using other decoking methods, such as steam-air decoking or mechanical pigging. On-line spalling is a process that removes coke and carbon buildup from the inside of the furnace tubes while maintaining a process flow through the nonspalled passes. This process uses steam velocity and tube temperatures to provide the energy to remove coke from inside the furnace tubes. The greatest advantage of the on-line spalling technique is that it enables the coker to operate at a reduced rate while decoking. Although an effective decoking method, spalling will not remove hard, inorganic scale material from the tubes, such as iron sulfide. Nonorganic fouling is typically removed with the pigging process. If the unit must be down for steam-air decoking or pigging, it is important to utilize this short downtime to clean transfer lines and inspect exchangers or other pieces of equipment within the unit.

A critical factor in on-line spalling facility design and operating procedure development is the overall coil geometry and configuration of the furnace convection and radiant sections. A detailed furnace geometry and tube design review will help to determine the overall feasibility of on-line spalling, as well as the general spalling velocity requirements, velocity limits, and operating guidelines. If not properly managed, excessive spalling steam velocities can quickly erode furnace tubes and return bends. In addition, spalling the furnace tubes too quickly or not monitoring and controlling the critical process variables can also cause serious plugging in the furnace tubes due to slugs of coke fines.

Another operational concern at many refineries is the preference to avoid shot coke production due to increased coke cutting difficulties. Feedstocks with higher asphaltene and aromatic contents tend to produce shot coke more often than sponge coke. Operating at higher temperatures and lower pressures also tends to increase the probability of shot coke production. However, these are the same operating conditions that help maximize liquid yields. In fuel-grade units it is typically more economical to operate at shot coke versus sponge coke conditions, because of improved liquid yields, better margins for advantaged crude slates, and increased throughput due to faster drum turnaround times. ConocoPhillips has proved it can efficiently and safely handle shot coke production in its units through operating and coke handling system *best practices.* Strict adherence to operating and drum cutting procedures can reduce the likelihood of coke drum blowouts and excessive bed dumps or coke falls that are typically associated with shot coke production.

The ConocoPhillips coking process integrally involves maintenance and reliability personnel early in the design stages. Incorporating equipment reliability aspects into design, combined with sufficient preventive maintenance (PM) plans into coker operations, will

Downloaded from Digital Engineering Library @ McGraw-Hill (www.digitalengineeringlibrary.com)
Copyright © 2004 The McGraw-Hill Companies. All rights reserved.
Any use is subject to the Terms of Use as given at the website.

CONOCOPHILLIPS DELAYED COKING PROCESS

increase unit performance. Designing coke handling cranes with adequate catch-up capacity for daily PM and reliability activities is one specific example of reliability integrated into the design philosophy. Effectively designing coke drums for long life cycles is another core area in which ConocoPhillips coking designs excel.

ConocoPhillips dedicates significant resources to extending coke drum life as both an operating company and a technology licensor. Having to replace coke drums prematurely not only is a significant capital expenditure, but also requires a 1- to 2-month unit shutdown for installation. In developing licensee design packages, the EPC contractor is provided with detailed fabrication guidelines based upon finite element analysis from extensive operating data. At some internal coking facilities, the following on-line techniques are used to monitor drum condition, help reduce stresses from normal cycle operations, and determine the remaining life expectancy of coke drums:

- Acoustic emissions to detect and locate cracks and monitor growth
- Strain gages to evaluate thermal and pressure effects of unit operations on coke drum stress
- Internal laser scans, performed in between the clean-out and backwarming drum steps, to identify drum bulges and weak spots
- Coke drum skin temperature monitoring to help track thermal stresses on the drums during the complete coking cycle

A few recent licensees have chosen to install several coke drum skin thermocouples and permanent strain gages on their coke drums as part of routine inspection programs.

Another benefit to licensees is ConocoPhillips' proven experience in implementing advanced process control (APC) on delayed cokers. APC is typically implemented as model-based multivariable control using one of several commercially available tools (such as RMPCT or DMCPlus). On a coker unit in addition to model-based control, the APC strategy consists of custom calculations and programs, such as drum status prediction. These applications use models obtained from testing at the actual plant to predict, control, and optimize the unit. Benefits from APC on delayed cokers include increased run length of furnaces, better coke drum outage control, minimized impact of drum switches on the fractionator and pumparound systems, improved product property control, the ability to operate equipment closer to process constraints, and increased unit capacity.

SAFETY CONSIDERATIONS

Safety is a core value for which ConocoPhillips dedicates significant time and resources toward continuous improvement. In 2001, the heritage Conoco company led the oil and gas industry for the fifth straight year with the best employee safety record. This was the 17th time in the past 23 years that Conoco Inc. led the industry, as reported by the American Petroleum Institute (API). Moreover, Conoco has an injury rate that is 3 times less than those of all the other companies reporting to API. ConocoPhillips has adopted this "safety first" attitude at its own coking facilities as well as its licensee units.

The most exciting recent safety improvement has been the development of a comprehensive coker personnel safety and emergency egress audit format. In spite of the heightened awareness emerging from new regulations such as OSHA 29 CFR 1910 over the last decade the number of major coker incidents has apparently increased. The companies involved in the coker incidents often had excellent PHA systems and emergency response measures; however, they were still not immune to the potential hazards. In response, ConocoPhillips

Downloaded from Digital Engineering Library @ McGraw-Hill (www.digitalengineeringlibrary.com)
Copyright © 2004 The McGraw-Hill Companies. All rights reserved.
Any use is subject to the Terms of Use as given at the website.

CONOCOPHILLIPS DELAYED COKING PROCESS

conducted a detailed study to determine how to best provide additional protection for people and property in and around the coker. Compiling industry data showed that regardless of the root cause, all major coker accidents manifested in three key areas: at the coke drum top head, bottom head, or drain lines. Workers risk exposure to fires, smoke inhalation, thermal burns, coke drum blowouts, and coke bed cave-ins at these locations.

The next step was to develop a methodology to evaluate each work location on the coker structure relative to the key hazard areas. The overriding objectives were to take steps toward mitigating the hazard and improving egress routes. A gap was identified within most safety systems from the time between the loss-of-containment event and the time when the emergency response team arrives. Therefore, it is important to identify the worker's route of natural egress, or where the worker initially runs after an incident, and provide the means for that worker to get from the egress point to a safe location.

These evaluations have aided several sites in creating a safer work environment. When reasonable, ConocoPhillips has tried to remove the worker from the hazard area altogether. Some examples are the capability of remotely drilling coke drums, remotely actuated or semimanual bottom unheading systems, and relocating actuation stations for valves and telescopic chutes. When the workers cannot be relocated to a safe or more protected area, it is critical to evaluate their primary and secondary paths for egress in the event of a dangerous situation. Steps must be taken to ensure workers have quick access to safe evacuation routes.

In addition to the safety evaluations on existing sites, ConocoPhillips utilizes unique design standards that help ensure inherently safer operations in grassroots units, some of which are as follows. The general coke drum structure design provides unhindered open paths through the length of the switch and unheading decks, and places them on a common elevation. This approach helps provide more accessible evacuation routes and better communication during the switching process. The overhead vapor line eductor design helps protect operators from potentially harmful and bothersome vapors that can escape at the top head. The fixed sloped-wall and pit design offer greater barrier protection to drain fires and have excellent energy dissipation for bottom blowout events. Also, the proprietary procedures for switching, steaming, cooling, and draining significantly reduce hot spots in the coke bed, which in turn ensures a safer and cleaner drilling process.

ConocoPhillips also incorporates job specific safety reviews and periodic unit process hazard analysis studies on the coker and other refining units. The hazard analysis reviews have recently been revised to incorporate the Layer of Protection Analysis (LOPA) methodology, a semiquantitative tool to assess the adequacy of safeguards. This rationale is utilized by a multidisciplined team to measure the sufficiency of protection layers (alarms, relief valves, control loops, etc.) against the potential consequences of process deviations (personnel exposure, loss of containment, etc.). The LOPA evaluation provides an order-of-magnitude approximation of the risk to identify whether additional safeguards are required. One recent example of using the LOPA evaluation process is in evaluating coker unit safety interlock systems. ConocoPhillips has utilized this knowledge to help licensees evaluate and develop thorough safety interlock system logic matrices.

ENVIRONMENTAL CONSIDERATIONS

Another company core value is the commitment to environmental stewardship. ConocoPhillips helps provide a more environmentally friendly coking process by taking additional measures to minimize noise, air, and water pollution. The latest environmental development for the refinery industry is the consideration for signing the Consent Decree with the U.S. Environmental Protection Agency, the U.S. Department of Justice, and indi-

Downloaded from Digital Engineering Library @ McGraw-Hill (www.digitalengineeringlibrary.com)
Copyright © 2004 The McGraw-Hill Companies. All rights reserved.
Any use is subject to the Terms of Use as given at the website.

CONOCOPHILLIPS DELAYED COKING PROCESS

vidual state governments. In signing, refiners agree to implement pollution control technologies and equipment to significantly reduce SO_2 and NO_x emissions from refinery process units, and enhance sitewide monitoring and fugitive emission control programs. ConocoPhillips, as a licensor of delayed coking technology, has also committed to conduct an extensive coker flare gas minimization study for the EPA to evaluate operational best practices and design procedures for flares servicing delayed cokers. This study will investigate methods to optimize flare gas recovery operations and to create a flareless operation delayed coking design.

In older delayed coking units, the main point sources for air quality concerns are the coker charge furnace stack emissions and the closed blowdown system (CBS) where off gas is rejected to the refinery flare system. During the backwarming and drum cooling phases of the normal decoking cycle, hydrocarbon vapors pass from the coke drum overhead, through the CBS, and the uncondensed gases are typically sent directly to the flare system. In more recent grassroots coker designs, this offgas stream is routed back to the main fractionator overhead accumulator for recovery in the gas plant. This design modification significantly reduces routine emissions to the refinery flare system from the delayed coker unit. Many existing facilities are now installing new low-pressure refinery flare gas recovery systems downstream of the CBS to further decrease air pollution, particularly SO_2 emission levels. To reduce furnace stack emissions, it is important to operate coker furnaces at optimum conditions. Installing air preheaters and advanced process controls can increase the overall furnace efficiency.

Although cokers typically use little of a refinery's cooling water capacity, the decoking and coke handling processes do require large quantities of water. Coking and calcining facilities can create a dusty atmosphere. Fine-tuning coke handling and dewatering operations to use the optimum water quantities is critical in reducing water and air pollution. Too much water creates excess runoff, while too little creates additional coke dust in the air. Typically, all cutting and coke handling water is recycled within the unit.

ECONOMICS

Relative Coke Pricing

The largest concentration of calcinable anode-grade coke producers and calciners is located along the U.S. Gulf Coast, thus pricing is generally referenced to this locale. Freight is a significant cost that affects the net-back price a refiner receives for its coke product. Both the distance from production site to market area and the available modes of transportation (water, trucking, or rail) within the region are important factors impacting shipping costs. In addition to transportation costs, the future market outlook and the amount of coke impurities are the other factors that determine the coke prices for calcinable anode-grade coke. A very high-grade calcinable anode-grade coke would have the following properties, as maximums: 1 wt % sulfur, 100 wppm vanadium, 10 wt % volatile matter, and all other metals in the ranges shown in "Typical properties" in Table 12.1.1 in the "Feedstocks and Types of Coke Products" section. This high-quality green anode coke would generally price between $70/DST and $90/DST (dry short ton) depending upon whether the general anode coke market is long or short. The least desirable anode-grade calcinable coke would have properties similar to those shown in the column "Approximate maximum properties" from Table 12.1.1 and would price in the range of $40/DST to $70/DST, again depending upon the green calcinable grade market conditions.

As in calcinable anode-grade coke, transportation can be a significant consideration in the price a refinery receives for fuel-grade coke. With the U.S. Gulf Coast taken as the ref-

Downloaded from Digital Engineering Library @ McGraw-Hill (www.digitalengineeringlibrary.com)
Copyright © 2004 The McGraw-Hill Companies. All rights reserved.
Any use is subject to the Terms of Use as given at the website.

CONOCOPHILLIPS DELAYED COKING PROCESS

erence point, fuel-grade coke with 40 HGI and 6 wt % sulfur will price between $5 and $20. Fuel coke with 4.5 percent sulfur and 50 HGI will generally price at $5 to $10 higher than the current market 6 wt % sulfur coke price. There are sources of lower-sulfur fuel coke, such as the U.S. West Coast, which generally command a $10/ton premium over the 4.5 wt % sulfur coke U.S. Gulf Coast price. However, the fuel coke market is volatile and the price can swing between the extremes, sometimes in a matter of months.

Yields Revenue

The revenue data listed in Table 12.1.5 quantify some of the benefits from implementing ConocoPhillips' patented recycle technologies and proprietary know-how. This table shows the incremental revenue from coker products for a 60,000-BPSD unit fresh feed rate using our delayed coking technology compared with conventional coking practices. The earnings are shown for a Middle Eastern residue feedstock. The liquid and gas product pricing data are based upon 2001 yearly average U.S. Gulf Coast spot pricing. Most Middle Eastern crudes are only suitable for general fuel coke production; thus a $5/MT coke price was applied.

Utility Usage

The actual utility usage for a 60,000-BPSD coking unit would depend upon the detailed design configuration of the facility. However, Table 12.1.6 provides a general utility consumption summary for a ConocoPhillips four-drum fuel- or anode-grade coker as described in the general process description portion of this chapter. The utility numbers include power requirements for the wet gas compressor, bridge crane, and crusher, but exclude the power usage for the jet water pump that is approximately 4400 bhp over a 2- to 3-h period per drum cycle.

Capital Costs

Total installed cost of a new coking unit will vary greatly depending upon design specifications, existing refining facilities, and geographic location. ConocoPhillips recently

TABLE 12.1.5 Revenue (million $/yr) for ConocoPhillips Delayed Coker versus Conventional Coking Technology

Feed	Middle Eastern resid 1050°F+	
API	5.64	
CCR, wt %	22.96	
Pressure, lb/in^2 gage	15	
Capacity, BPSD	60,000	
	Conventional	ConocoPhillips
C_4 and lighter	63	75
C_5–335°F	103	109
335–650°F	150	117
650°F+	149	179
Coke	5	5
Incremental value of ConocoPhillips technology = $13.5 million/yr		

Downloaded from Digital Engineering Library @ McGraw-Hill (www.digitalengineeringlibrary.com)
Copyright © 2004 The McGraw-Hill Companies. All rights reserved.
Any use is subject to the Terms of Use as given at the website.

CONOCOPHILLIPS DELAYED COKING PROCESS

TABLE 12.1.6 Estimated Utility Consumption for a Typical 60,000-BPSD ConocoPhillips Delayed Coker

Utility	Consumption
Power, bhp	13,940
Fuel gas, million Btu/h	361
600# Steam, lb/h	13,400
475# Steam, lb/h	(52,000)
150# Steam, lb/h	7350
BFW, gal/min	140
Condensate, gal/min	25

Note: BFW = foiler feedwater.

designed a 60,000-BPSD U.S. grassroots delayed coker at an as-built cost of approximately $180 million in 2000. This package included the design and construction of the four-drum coking section, fractionation section, gas plant, coke handling up to the inlet of the crusher, closed blowdown system, engineering costs, and royalties. Approximately 20 to 25 percent of the total installed costs were associated with the gas plant facilities.

PROVEN COMMERCIAL EXPERIENCE

ConocoPhillips has a long history in delayed coking, nearly 50 years of operating, maintenance, and design experience. This valuable know-how coupled with ConocoPhillips' commitment to ongoing research and development efforts has propelled ConocoPhillips to the forefront in the delayed coking industry.

ConocoPhillips is also the *only* delayed coking licensor that also operates its own coking facilities. This extensive operational and maintenance knowledge is one of the key benefits passed along to our licensees. Table 12.1.7 lists the 16 ConocoPhillips wholly owned or joint venture delayed coking facilities in operation.

In addition to these ConocoPhillips cokers, there are over 30 delayed coking units around the world that are benefiting from the ConocoPhillips Coking Process. With 11 new, grassroots units and 9 revamped cokers efficiently designed and safely started up since 1987, ConocoPhillips offers licensees the most experienced engineering and operations support in the industry. Table 12.1.8 summarizes the sites that have licensed the ConocoPhillips patented delayed coking technology.

ConocoPhillips delayed coking licensees are provided process and mechanical design packages for the furnace and fractionation area, the coke drum and coke handling system, the closed blowdown, hydraulic decoking, and the green coke handling systems. Additionally, ConocoPhillips offers licensees a broad range of support services in operator training, construction and start-up support, and technical services.

Licensees are given the opportunity to receive extensive hands-on operator training at a ConocoPhillips-owned U.S. coking facility. The training program can be tailored to meet the exact experience level of the trainee operators and the needs of the owner. Additional training opportunities available include a coker management and technical program for operations supervisors and technical personnel; development of operating procedures; and maintenance awareness training with input from counterparts from ConocoPhillips' own cokers.

During the construction phase, licensees are also offered plant audits at the 50 and 90 percent completion points to ensure that process technology and operational and mainte-

Downloaded from Digital Engineering Library @ McGraw-Hill (www.digitalengineeringlibrary.com)
Copyright © 2004 The McGraw-Hill Companies. All rights reserved.
Any use is subject to the Terms of Use as given at the website.

CONOCOPHILLIPS DELAYED COKING PROCESS

TABLE 12.1.7 ConocoPhillips-Owned Delayed Coking Facilities

Coker location	Unit	Fresh feed rate in 2001, BPSD	Number of coke drums
Alliance, La., USA		26,000	2
Billings, Mont., USA		19,250	2
Los Angeles, Calif., USA		52,700	4
Jose, Venezuela*		63,000	4
North Lincolnshire, England	A	42,500	4
	B	29,500	4
Lake Charles, La., USA	A	53,500	4
	B	14,000	4
Melaka, Malaysia		22,930	2
Karlsruhe, Germany		36,000	2
Jose, Venezuela		61,000	4
Ponca City, Okla., USA		26,200	2
Rodeo, Calif., USA		29,000	2
Santa Maria, Calif., USA	A	11,900	2
	B	11,900	2
Sweeny, Tex., USA		65,900	4

*Construction scheduled for completion in 2004.

nance considerations are being properly implemented. Additionally, if desired, a preoperations readiness audit can be conducted to evaluate overall planning efforts, understanding of operating procedures, laboratory testing capabilities, maintenance procedures, staffing requirements, etc. Each audit team is usually comprised of mechanical engineers, process engineers, and operations representatives.

For unit start-up, ConocoPhillips typically supplies process engineers, operators, and mechanical support personnel from its own coking facilities for several weeks to ensure an efficient and safe start-up. ConocoPhillips also typically provides technical support and information services during commercial operation on an as-requested basis. This includes technical service on maintenance, future expansion engineering studies and designs, process troubleshooting on furnace and fractionator operation, etc.; customer end-use support; and applied research such as pilot-plant studies, feedstock evaluations, and process/product development relationships and improvements.

ACKNOWLEDGMENTS

We would like to acknowledge the numerous colleagues at ConocoPhillips who assisted in the development and editing of this chapter. Without the wide range of knowledge and effort from the Coke Technology and Licensing team, this chapter would not have been possible.

Downloaded from Digital Engineering Library @ McGraw-Hill (www.digitalengineeringlibrary.com)
Copyright © 2004 The McGraw-Hill Companies. All rights reserved.
Any use is subject to the Terms of Use as given at the website.

CONOCOPHILLIPS DELAYED COKING PROCESS

TABLE 12.1.8 ConocoPhillips Delayed Coking Licensees

Year	Original licensee	Location	Original design feed rate, BPSD	Coke production, KTPY
1981	Tenneco	Chalmette, La.	19,000	435
1982	Gulf*	Alliance, La.	19,000	278
1983	Texaco*	El Dorado, Kan.	16,000	228
1984	Petrocokes	Japan	13,000	229
1984	Amoco*	Whiting, Ind.	23,000	443
1984	Amoco*	Yorktown, Va.	13,000	226
1987	Praoil*	Gela, Italy	27,000	438
1988	Praoil	Gela, Italy	19,000	370
1989	Star Enterprise	Port Arthur, Tex.	40,000	739
1989	Frontier*	Cheyenne, Wyo.	10,000	200
1991	Nippon	Japan	20,000	278
1993	VEBA*	Germany	10,000	170
1993	MRC	Malaysia	21,000	400
1994	Ultramar	Canada	24,000	277
1994	Petrozuata	Venezuela	26,000	601
1995	Petrozuata	Venezuela	26,000	601
1995	Wintershall*	Germany	20,000	190
1997	Suncor	Canada	100,000	1245
1997	Midor	Egypt	23,000	370
1998	Suncor*	Canada	120,000	1494
1998	Phillips/PDVSA	Sweeny, Tex.	58,000	1426
1998	MiRO*	Germany	22,000	400
1998	Exxon	Baytown, Tex.	40,000	1026
1998	Exxon*	Baton Rouge, La.	103,000	1472
1999	Marathon	Garyville, La.	35,000	869
1999	Hovensa	St. Croix, USVI	58,000	1426

*Conversion of existing cokers to ConocoPhillips Delayed Coking Technology. All others are new coking facilities.

REFERENCES

1. Charles Kruse, Ralph Ragsdale, Jim Roth, and Gary Hughes, "Low Pressure Coker Operation with Distillate Recycle," NPRA Annual Meeting, San Francisco, March 1995.
2. Gary Hughes, Brian Doerksen, Ann Englehorn, and Sim Romero, "Tutorial: Delayed Coking Commercial Technology," AIChe Spring National Meeting, Atlanta, March 2000.
3. Harad Onder and Edward Bagdoyen, *Everything You Always Wanted to Know About Petroleum Coke,* Precision Printers, 1997.
4. Earl F. Bradshaw, photo: Delayed coker complex in ConocoPhillips' Refinery at Lake Charles, La.

Downloaded from Digital Engineering Library @ McGraw-Hill (www.digitalengineeringlibrary.com)
Copyright © 2004 The McGraw-Hill Companies. All rights reserved.
Any use is subject to the Terms of Use as given at the website.

Downloaded from Digital Engineering Library @ McGraw-Hill (www.digitalengineeringlibrary.com)
Copyright © 2004 The McGraw-Hill Companies. All rights reserved.
Any use is subject to the Terms of Use as given at the website.

Source: HANDBOOK OF PETROLEUM REFINING PROCESSES

CHAPTER 12.2
FW DELAYED-COKING PROCESS

Howard M. Feintuch
Kenneth M. Negin
Foster Wheeler USA Corporation
Clinton, New Jersey

The delayed coker is an important residue conversion process, or so-called "bottom-of-the-barrel" process where residues from heavy, high-sulfur crudes are converted to transportation fuels.

Statistically, in terms of number of units installed and total current operating capacity, it is quite easy to show that delayed coking is the residue-conversion process which is most often used today. In addition, because of its wide commercial acceptance, delayed coking has been referred to as the yardstick against which other, less commercially proven, processes must be measured.[2]

Despite its wide commercial use, only relatively few contractors and refiners are truly knowledgeable in delayed-coking design, so that this process carries with it a "black art" connotation.[3]

The year in which delayed coking was first developed is given in historical listings of petroleum advances as 1928.[4] We know that in early refineries severe thermal cracking of residue would result in the deposit of unwanted coke in the heaters. By evaluation of the art of heater design, methods were found by which it was possible to raise rapidly the temperature of the residue above the coking point without depositing the coke in the heater itself. Provision of an insulated surge drum downstream of the heater so that the coking took place after the heater, but before subsequent processing, resulted in the name "delayed coking."[5]

The next step was to add a second coke drum, which doubled the run length and led to the development of the art of switching coke drums while still maintaining operation.[6] In the early 1930s the drums were limited in size to 10 ft in diameter.[7] Coke drums as large as 30 ft in diameter have recently been installed. Figure 12.2.1 shows the general trend in the growth in coke-drum diameter from 1930 to 1995.

As of Jan. 1, 1995, there were in operation in the United States 45 delayed cokers with the capacity to process 1,598,000 BPSD of fresh feed.[8] Table 12.2.1 shows coking-plant-capacity statistics for the United States from 1946 to 1995.[9,10] Figures 12.2.2 and 12.2.3 present two delayed cokers, one operating on the United States Gulf Coast and the other which had operated in the Netherlands. (Abbreviations are defined in Table 12.2.17 at the end of the chapter.)

Downloaded from Digital Engineering Library @ McGraw-Hill (www.digitalengineeringlibrary.com)
Copyright © 2004 The McGraw-Hill Companies. All rights reserved.
Any use is subject to the Terms of Use as given at the website.

FW DELAYED-COKING PROCESS

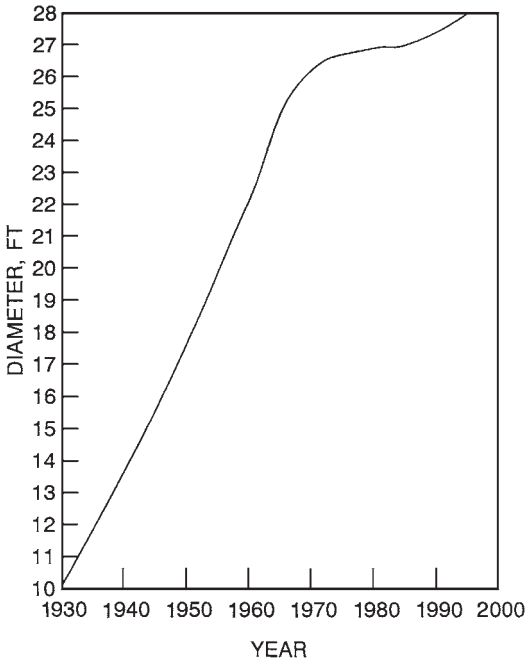

FIGURE 12.2.1 Trend in delayed-coker maximum drum size.

TABLE 12.2.1 United States Coking-Plant Statistics

Year	United States coking capacity, BPSD
1946	102,000
1950	158,000
1960	475,000
1970	835,000
1973	1,008,000
1982	1,118,100
1995	1,598,000

Source: W. L. Nelson, *Oil Gas J.,* **74,** 60 (May 24, 1976); *Oil Gas J.,* **80,** 81, 130 (Mar. 22, 1982); *Oil Gas J.,* **92,** 51, 53 (Dec. 19, 1994).

PROCESS DESCRIPTION

Figure 12.2.4 is a process-flow diagram showing the coking, fractionator, coker blowdown, and steam-generation sections of a typical delayed coker. The associated vapor-recovery unit is shown separately in Fig. 12.2.5 and the coke-calcining plant separately in Figs. 12.2.6 and 12.2.7. A brief description of each of these sections is given below.

Downloaded from Digital Engineering Library @ McGraw-Hill (www.digitalengineeringlibrary.com)
Copyright © 2004 The McGraw-Hill Companies. All rights reserved.
Any use is subject to the Terms of Use as given at the website.

FW DELAYED-COKING PROCESS

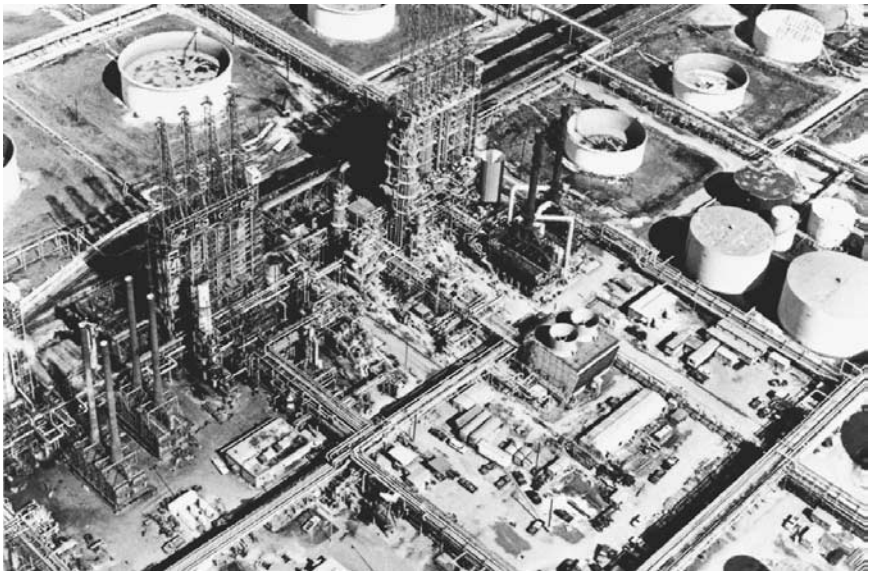

FIGURE 12.2.2 Delayed coker in the Gulf Coast region of the United States. Center left and right each show four coke drums with drilling platforms for hydraulic decoking. Lower left shows two heaters and four associated stacks. Center right shows two heaters and their associated stacks.

Coking Section

Reduced-crude or vacuum-residue fresh feed is preheated by exchange against gas oil products before entering the coker-fractionator bottom surge zone. The fresh feed is mixed with recycle condensed in the bottom section of the fractionator and is pumped by the heater charge pump through the coker heater, where the charge is rapidly heated to the desired temperature level for coke formation in the coke drums. Steam is often injected into each of the heater coils to maintain the required minimum velocity and residence time and to suppress the formation of coke in the heater tubes.

The vapor-liquid mixture leaving the furnace enters the coke drum, where the trapped liquid is converted to coke and light-hydrocarbon vapors. The total vapors rise upward through the drum and leave overhead.

A minimum of two drums is required for operation. One drum receives the furnace effluent, which it converts to coke and gas while the other drum is being decoked.

Fractionation Section

The coke-drum overhead vapors flow to the coker fractionator and enter below the shed section. The coke-drum effluent vapors are often "quenched" and "washed" with hot gas oil pumped back to the trayed wash section above the sheds. These operations clean and cool the effluent-product vapors and condense a recycle stream at the same time. This recycle stream, together with the fresh feed, is pumped from the coker fractionator to the coking furnace. The washed vapors pass to the rectifying section of the tower. A circulating heavy gas oil pumparound stream, withdrawn from the pumparound pan, is used to remove heat from the tower, condensing the major portion of heavy gas

Downloaded from Digital Engineering Library @ McGraw-Hill (www.digitalengineeringlibrary.com)
Copyright © 2004 The McGraw-Hill Companies. All rights reserved.
Any use is subject to the Terms of Use as given at the website.

FW DELAYED-COKING PROCESS

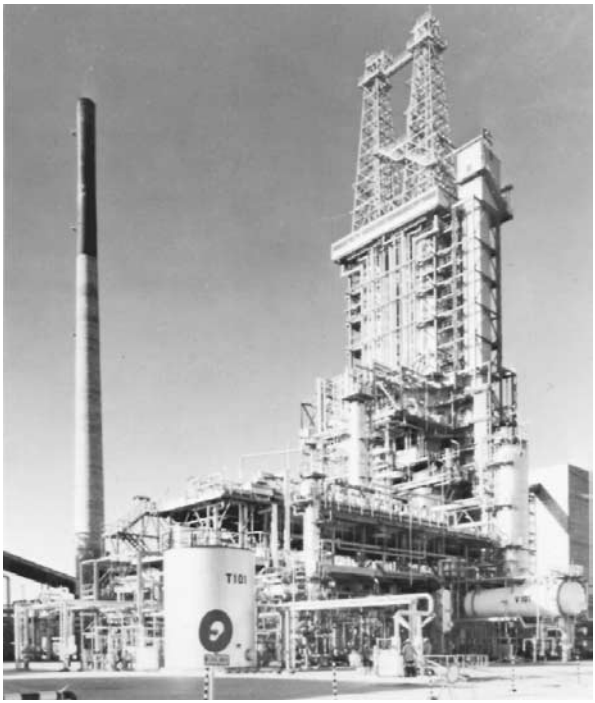

FIGURE 12.2.3 An advanced needle coker in the Netherlands. Center shows two coke drums with drilling platforms for hydraulic decoking. Coke drums are elevated for gravity-flow, totally enclosed coke handling for environmental reasons. Left shows heater stack.

oil and cooling the ascending vapors. The hot pumparound stream of heavy gas oil withdrawn from the fractionator can be used to reboil the towers in the vapor-recovery plant, to preheat the charge to the unit, or to generate steam. The heavy gas oil product is partially cooled via exchange with the charge and air-cooled to storage temperature. Light gas oil product is steam-stripped to remove light ends, partially cooled via heat exchange with the charge, and air-cooled to storage temperature.

If a vapor-recovery unit is included in the design, then a sponge-oil system may be required. Lean sponge oil is withdrawn from the fractionator, cooled by heat exchange with the rich sponge oil, and then air-cooled before flowing to the top of the sponge absorber. Rich sponge oil is returned to the top heat-transfer tray above the lean-sponge-oil draw-off tray after preheat by exchange with the lean sponge oil.

The overhead vapors are partially condensed in the fractionator overhead condenser before flowing to the fractionator overhead drum. The vapor is separated from liquid in this vessel. The vapor flows under pressure control to the suction of the gas compressor in the vapor-recovery unit. The top of the fractionator is refluxed with part of the condensed hydrocarbon liquid collected in the overhead drum. The balance of this liquid is sent with the compressed vapors to the vapor-recovery unit. Sour water is withdrawn from the overhead drum and typically pumped to off-site treating facilities.

Downloaded from Digital Engineering Library @ McGraw-Hill (www.digitalengineeringlibrary.com)
Copyright © 2004 The McGraw-Hill Companies. All rights reserved.
Any use is subject to the Terms of Use as given at the website.

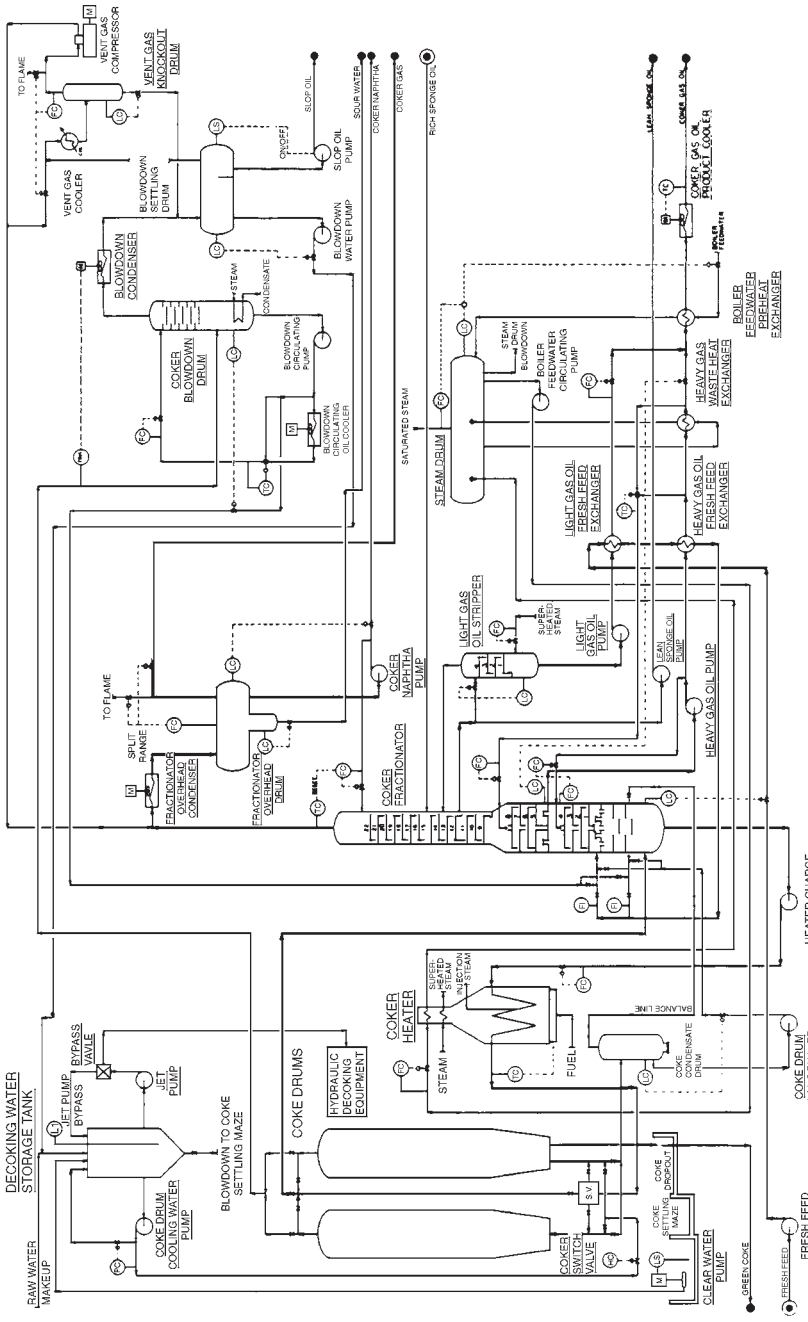

FIGURE 12.2.4 Process-flow diagram for a typical delayed coker.

Downloaded from Digital Engineering Library @ McGraw-Hill (www.digitalengineeringlibrary.com)
Copyright © 2004 The McGraw-Hill Companies. All rights reserved.
Any use is subject to the Terms of Use as given at the website.

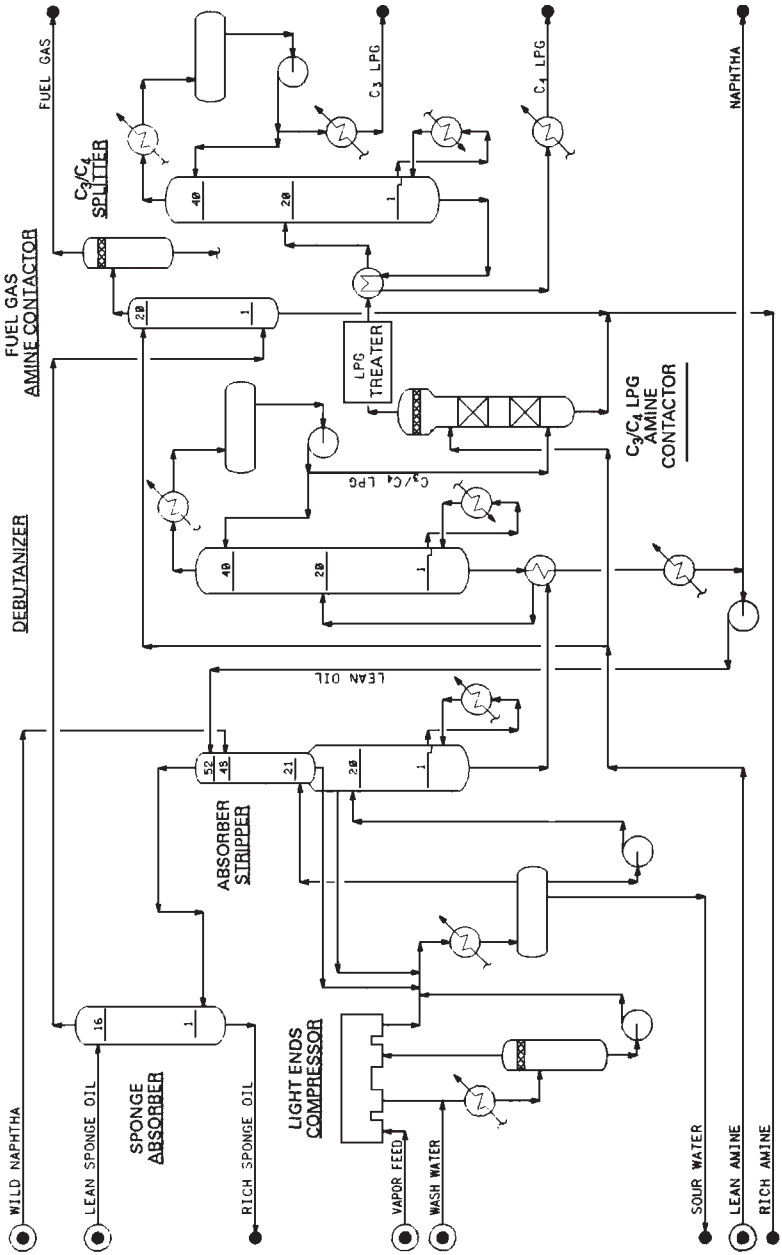

FIGURE 12.2.5 Typical vapor-recovery unit for a delayed coker.

Downloaded from Digital Engineering Library @ McGraw-Hill (www.digitalengineeringlibrary.com)
Copyright © 2004 The McGraw-Hill Companies. All rights reserved.
Any use is subject to the Terms of Use as given at the website.

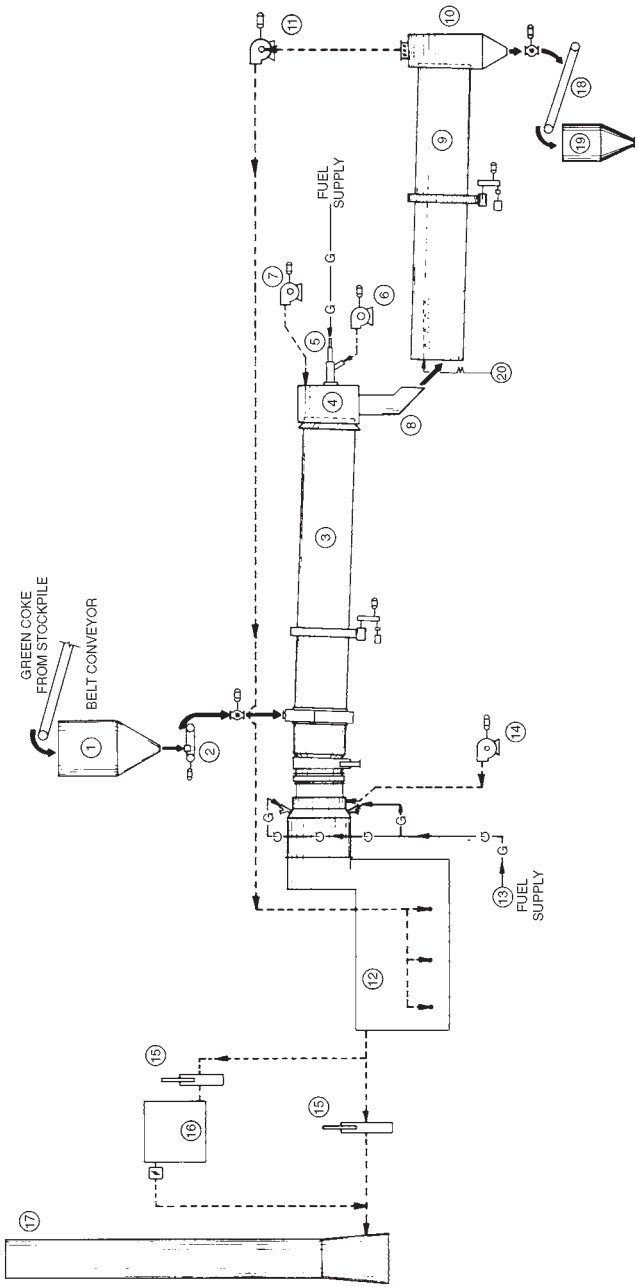

FIGURE 12.2.6 Simplified schematic of a coke-calcining plant; case A: rotary-kiln calciner. 1 = feed bin; 2 = weigh feeder; 3 = rotary kiln with scoop feeder; 4 = kiln firing hood; 5 = firing system; 6 = primary air fan; 7 = secondary air fan; 8 = transfer chute; 9 = rotary cooler; 10 = cooler discharge hood; 11 = cooler exhaust air fan; 12 = incinerator; 13 = incinerator auxiliary burners; 14 = incinerator air fan; 15 = dampers; 16 = waste-heat boiler with fan; 17 = stack; 18 = product conveyer; 19 = product bin; 20 = quench water. (*Courtesy of Kennedy Van Saun Corporation.*)

Downloaded from Digital Engineering Library @ McGraw-Hill (www.digitalengineeringlibrary.com)
Copyright © 2004 The McGraw-Hill Companies. All rights reserved.
Any use is subject to the Terms of Use as given at the website.

FW DELAYED-COKING PROCESS

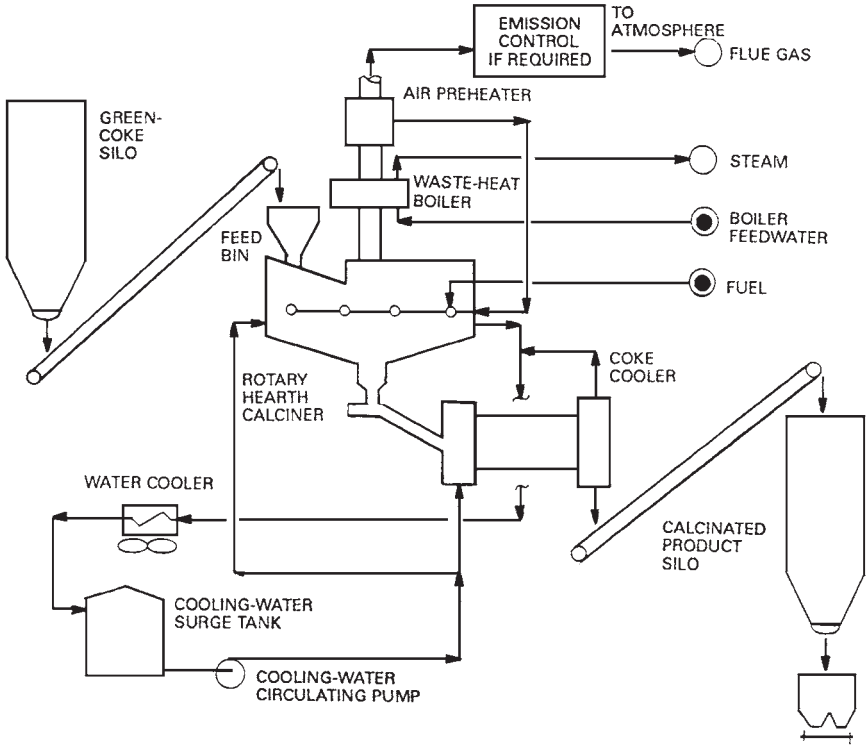

FIGURE 12.2.7 Simplified schematic of a coke-calcining plant; case B: rotary-hearth calciner.

Coker Blowdown

The coke-drum blowdown system serves the purpose of recovering hydrocarbon and steam vapors generated during the quenching and steaming operation. It is designed to minimize air pollution during normal operation. The system[7] includes a coker blowdown drum, blowdown condenser, blowdown settling drum, blowdown circulating oil cooler, vent-gas compressor system, and attendant pumps.

During the coke-drum cooling cycle, steam and wax tailings flow to the coker blowdown drum, where they are condensed by contact with a cooled circulating oil stream. This circulating oil stream also dilutes the wax tailings. The diluted wax tailings are withdrawn from the bottom of the drum and recirculated after cooling in the blowdown circulating-oil cooler. Excess oil is returned to the fractionator. Light gas oil makeup is charged to the coker blowdown drum as required for dilution of the mixture.

Steam and light hydrocarbons from the top of the coker blowdown drum are condensed in the blowdown condenser before flowing to the blowdown settling drum. In the settling drum, oil is separated from condensate. The oil is pumped to refinery slop, while the water is pumped either to off-site treating facilities or to the decoking-water storage tank for reuse.

Light hydrocarbon vapors from the blowdown settling drum are compressed in the vent-gas compressor after being cooled in the vent-gas cooler and separated from the resultant liquid in the vent-gas knockout drum. The recovered vent gas flows to the inlet

Downloaded from Digital Engineering Library @ McGraw-Hill (www.digitalengineeringlibrary.com)
Copyright © 2004 The McGraw-Hill Companies. All rights reserved.
Any use is subject to the Terms of Use as given at the website.

FW DELAYED-COKING PROCESS

of the fractionator overhead condenser. Alternatively, it may be sent directly to the fuel-gas-recovery system.

Steam Generation

The heat removed from the fractionator by the heavy gas oil pumparound stream is used to preheat feed and to generate steam. Depending on economics, additional steam may be generated in the convection section of the coker-fired heater. A common steam drum is utilized. Circulation through the steam-generating coil of the heater is provided by the boiler feedwater circulating pump.

Decoking Schedule

The decoking operation consists of the following steps:

1. *Steaming.* The full coke drum is steamed out to remove any residual-oil liquid. This mixture of steam and hydrocarbon is sent first to the fractionator and later to the coker blowdown system, where the hydrocarbons (wax tailings) are recovered.
2. *Cooling.* The coke drum is water-filled, allowing it to cool below 93°C. The steam generated during cooling is condensed in the blowdown system.
3. *Draining.* The cooling water is drained from the drum and recovered for reuse.
4. *Unheading.* The top and bottom heads are removed in preparation for coke removal.
5. *Decoking.* Hydraulic decoking is the most common cutting method. High-pressure water jets are used to cut the coke from the coke drum. The water is separated from the coke fines and reused.
6. *Heading and testing.* After the heads have been replaced, the drum is tightened, purged, and pressure-tested.
7. *Heating up.* Steam and vapors from the hot coke drum are used to heat up the cold coke drum. Condensed water is sent to the blowdown drum. Condensed hydrocarbons are sent to either the coker fractionator or the blowdown drum.
8. *Coking.* The heated coke drum is placed on stream, and the cycle is repeated for the other drum.

Typical coke-drum schedules for two-drum and six-drum delayed cokers are shown in Figs. 12.2.8 and 12.2.9. Although these are both 36-hour coking cycles, composed of 18 hours of coking and 18 hours of decoking, they are often referred to as *18-hour cycles.* Refiners sometimes operate on "short cycles," which have cycle times less than the design cycle. This has an operating advantage. It allows the refiner to increase the unit throughput by filling the coke drums faster. The refiner takes advantage of the inherent design margins in the rest of the unit's equipment to process this increased capacity. If necessary, the rest of the unit may require a revamp to handle the extra capacity, but this can readily be achieved. Refiners have reported short cycles as low as 11 hours in small cokers, but 14 to 16 hours is more typical. By using short cycles for a new design, smaller coke drums would be required with a reduced investment cost.

Vapor-Recovery Unit

The vapor and liquid streams from the fractionator overhead drum are processed further in the vapor-recovery unit. The liquid stream goes directly to the top of the absorber.

Downloaded from Digital Engineering Library @ McGraw-Hill (www.digitalengineeringlibrary.com)
Copyright © 2004 The McGraw-Hill Companies. All rights reserved.
Any use is subject to the Terms of Use as given at the website.

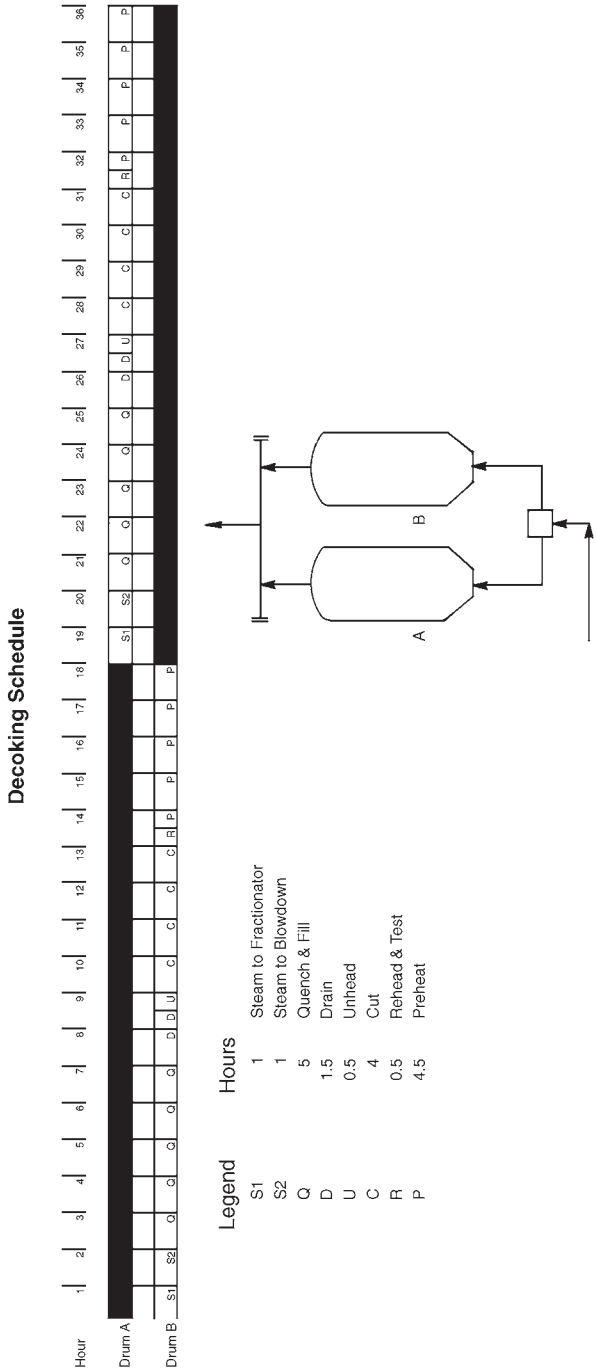

FIGURE 12.2.8 Typical coke-drum cycle for two drums.

Downloaded from Digital Engineering Library @ McGraw-Hill (www.digitalengineeringlibrary.com)
Copyright © 2004 The McGraw-Hill Companies. All rights reserved.
Any use is subject to the Terms of Use as given at the website.

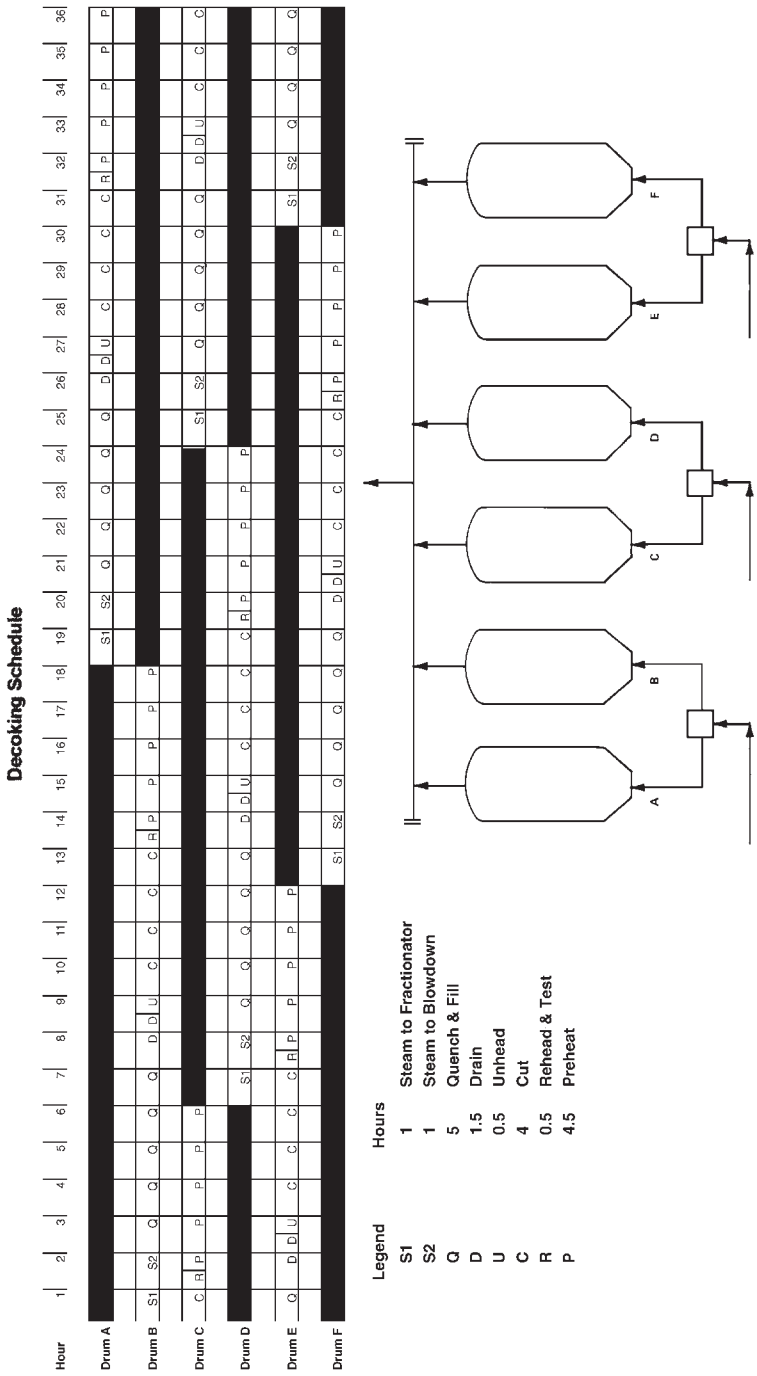

FIGURE 12.2.9 Typical coke-drum cycle for six drums.

Downloaded from Digital Engineering Library @ McGraw-Hill (www.digitalengineeringlibrary.com)
Copyright © 2004 The McGraw-Hill Companies. All rights reserved.
Any use is subject to the Terms of Use as given at the website.

FW DELAYED-COKING PROCESS

The vapor stream is compressed and cooled, the resulting vapor and liquid streams are fed to the absorber-stripper, the vapor goes to the bottom of the absorber, and the liquid goes to the top of the stripper.

The absorber-stripper produces a bottoms stream that contains most of the C_3 and heavier material in the feed. The overhead from the absorber contains the C_2 and lighter portion, plus some unrecovered C_3 and heavier material. This unrecovered C_3 and heavier material is recovered in the sponge absorber and recycled back to the fractionator. The C_2 and lighter portion leaving the top of the sponge absorber passes through an amine absorber, where the hydrogen sulfide is removed, before it goes on to the fuel-gas system. The sponge absorber uses a side cut from the fractionator as an absorbing medium.

The bottoms from the stripper flow to the debutanizer, where the C_3 and C_4 are removed overhead, leaving a stabilized naphtha as a bottoms product. The naphtha can go to product storage or to further processing, as required.

The debutanizer distillate, or C_3-C_4 liquefied petroleum gas (LPG), goes to a "treating" section, where hydrogen sulfide, mercaptans, and other sulfur compounds are removed. This treating section usually has an amine absorber (liquid-liquid contactor), followed by a mercaptan-removal processing facility. From here the stream flows into the C_3-C_4 splitter, where the feed is separated into C_3 and C_4 LPG products.

Coke-Calcining Plant

Two methods for calcining coke are available commercially. They are the rotary-kiln method, as shown in Fig. 12.2.6, and the rotary-hearth method, as shown in Fig. 12.2.7. The rotary-kiln method is the older of the two methods and has been in use for many years. The rotary-hearth method recently has been gaining increased popularity. The two methods are similar in concept but differ in mechanical details. The description given below is specific to the rotary-kiln method.

Coke which has not yet been calcined for removal of excess moisture and volatile matter is referred to as "green" coke. After draining, the coke is charged to a crusher and then to a kiln feed bin or bins. The rate of charge to the kiln is controlled by a continuous-weigh feeder.

In the kiln first the residual moisture and subsequently the volatile matter are removed, as the green coke moves countercurrently to the heat flow. Process heat is supplied to the kiln through a burner which is designed to handle the available fuel. Another source of process heat is combustion of the volatile matter released by the green coke in the kiln.

The calcined coke leaving the kiln is discharged into a rotary cooler, where it is quenched with direct water sprays at the inlet and then cooled further by a stream of ambient air which is pulled through the cooler. The coke is conveyed from the rotary cooler to storage.

A rotary kiln coke calciner is shown in Fig. 12.2.10.

FEEDSTOCKS

Heavy residues such as vacuum residue or occasionally atmospheric residue are the feedstocks which are most commonly used in delayed coking. For special applications in which high-quality needle coke is desired, certain highly aromatic heavy oils or blends of such heavy oils may be used instead. The discussion which follows describes various types of feeds and their characteristics both for routine and for specialized delayed-coking applications.

Downloaded from Digital Engineering Library @ McGraw-Hill (www.digitalengineeringlibrary.com)
Copyright © 2004 The McGraw-Hill Companies. All rights reserved.
Any use is subject to the Terms of Use as given at the website.

FW DELAYED-COKING PROCESS

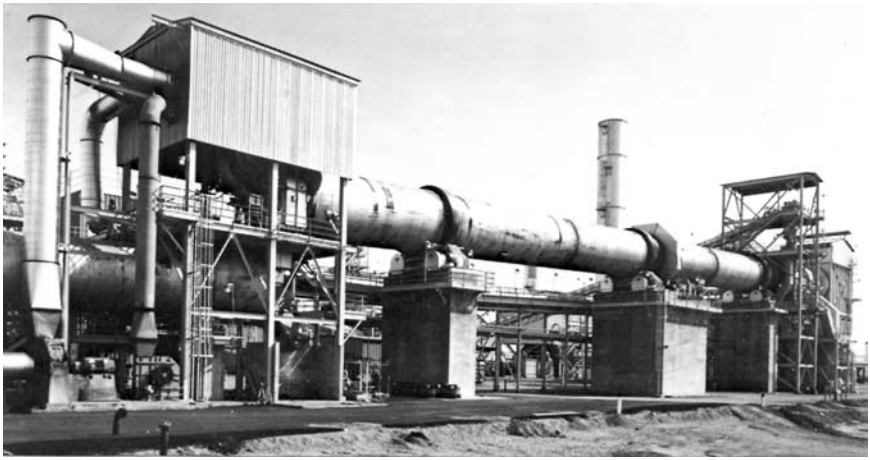

FIGURE 12.2.10 Coke-calcining plant. The plant is for the Martin Marietta Carbon Co., Wilmington, Calif. The photograph shows a 13½- by 270-ft rotary kiln for a plant processing 300,000 tons/year of calcined coke. (*Photograph courtesy of Martin Marietta Carbon Co. and Kennedy Van Saun Corporation.*)

Regular-Grade Coke Production

The most common type of coke produced by a majority of the delayed cokers in operation today is a regular-grade coke known as sponge coke. As we will discuss later in the section "Uses of Petroleum Coke," depending on the impurity levels present, the coke may be suitable for use in the manufacture of electrodes for the aluminum industry or alternatively for use as a fuel.

Petroleum residue from a refinery vacuum tower, less frequently from an atmospheric tower, or sometimes from a mixture of both, is the feed which is typically used in the production of regular-grade coke.

Table 12.2.2 shows the most important feedstock characteristics for several vacuum residues.

Carbon Residue. In determining the quantity of coke that will be produced from any particular feedstock, the most important characteristic to be considered is the carbon residue. The carbon residue may be defined as the carbonaceous residue formed after evaporation and pyrolysis of a petroleum product.[12] Two methods of testing are

TABLE 12.2.2

Feedstock Characteristics for Various Vacuum Residues

Crude source	African	Southeast Asian	Mexican	Middle East
TBP cut point, °C	482+	482+	538+	538+
Density, °API	12.8	17.1	4.0	8.2
Conradson carbon, wt %	5.2	11.1	22.0	15.6
Sulfur, wt %	0.6	0.5	5.3	3.4
Metals (Ni+V), wt ppm	50	44	910	90

Downloaded from Digital Engineering Library @ McGraw-Hill (www.digitalengineeringlibrary.com)
Copyright © 2004 The McGraw-Hill Companies. All rights reserved.
Any use is subject to the Terms of Use as given at the website.

FW DELAYED-COKING PROCESS

available. They are the Conradson carbon test (ASTM D 189) and the Ramsbottom coke test (ASTM D 524). For the purposes of our discussion we will be concerned with the Conradson carbon residue (CCR). The higher the CCR, the more coke that will be produced. Since, in most cases, the object of delayed coking is to maximize the production of clean liquid products and minimize the production of coke,[7] the higher the CCR the more difficult this is to achieve.

Although CCR values may formerly have ranged from less than 10 wt % to rarely more than 20 wt %, with the trend in recent years toward processing heavier crudes, values of CCR in excess of 20 wt % and sometimes higher than 30 wt % are becoming more common.

Sulfur. Sulfur is an objectionable feed impurity which tends to concentrate in the coke and in the heavy liquid products. In a manner similar to CCR, the trend in recent years, owing to increased processing of less desirable, heavier, higher-sulfur crudes, is for a resultingly higher sulfur content in the feed to a delayed coker. This results in corresponding high levels of sulfur in the coke and in the heavy-liquid products.

Metals. Metals such as nickel and vanadium are objectionable feed impurities which tend to be present in increasing quantities in heavier feeds. The metals present in the feed tend to concentrate almost entirely in the coke.[13] Some heavy feeds contain metals in excess of 1000 wt ppm.

TBP Cut Point. For vacuum residues a typical true boiling point (TBP) cut point is 538°C, but it may be lower or higher depending on the crude. For atmospheric residues a TBP cut point of 343°C is typical. The TBP cut point will define the concentration of CCR, sulfur, and metals in the feed and thereby affect yields and product quality.

Needle Coke Production

Needle coke is a premium coke used in the manufacture of high-quality graphite electrodes for the steel industry. It owes this application to its excellent electrical conductivity, good mechanical strength at high temperatures, low coefficient of thermal expansion, low sulfur content, and low metal content.

In general, vacuum or atmospheric crude residues are not suitable feedstocks for needle coke production. What is needed instead is a heavy feedstock which is highly aromatic and, in addition, is low in sulfur and low in metals. Table 12.2.3 gives a comprehensive list of potential feedstock sources for needle-coke production. Depending upon the specific properties of a particular feedstock in question, it may or may not prove to be suitable for needle coke production.

Table 12.2.4 lists the aromatic content, sulfur content, and CCR for three feedstocks which are known to be suitable for needle coke production. For the feedstocks shown we can see that, in general, the aromatics content is greater than 60 liquid volume percent (LV %), the sulfur content is less than 1 wt %, and the CCR is less than 10 wt %.

Residue Hydrodesulfurization of Feedstocks

To combat the impurity and yield problems which result from using very heavy poor-quality residues as feedstocks, there is a growing trend to employ residue hydrodesulfurization upstream of the delayed-coking unit.[7] When this is done, the metals and CCR, as well as the sulfur level of the feedstock, are reduced. This results in an attractively lower yield of higher-purity coke and a resultingly higher yield of clean liquid products.

Downloaded from Digital Engineering Library @ McGraw-Hill (www.digitalengineeringlibrary.com)
Copyright © 2004 The McGraw-Hill Companies. All rights reserved.
Any use is subject to the Terms of Use as given at the website.

FW DELAYED-COKING PROCESS

TABLE 12.2.3 Potential Feedstocks for Needle Coke Production

Thermal tars
Vacuum-flashed thermal tars
Decant oils (slurry oils)
Thermally cracked decant oil
Pyrolysis tars
Topped pyrolysis tars
Thermally cracked pyrolysis tar
Lubricating-oil extract
Thermally cracked coker gas oils
Synergistic mixtures
Decant oil–pyrolysis tar
Decant oil–pyrolysis tar–vacuum residue
Decant oil–thermal tar
Decant oil–thermal tar–vacuum residue
Thermally cracked vacuum gas oil–coker gas oil
Thermal tar–pyrolysis tar
Pyrolysis tar–hydrotreated FCC gas oil

TABLE 12.2.4 Needle Coke Feedstock Characteristics

Item	Slurry oil	Thermal tar no. 1	Thermal tar no. 2
Aromatic content, LV %	61.7	89.8	66.1
Sulfur content, wt %	0.48	0.07	0.56
Conradson carbon residue, wt %	5.7	9.4	8.6

Source: D. H. Stormont, *Oil Gas J.,* **67,** 75 (Mar. 17, 1968).

To show how beneficial this is, Figs. 12.2.11, 12.2.12, and 12.2.13 illustrate the effects of typical residue hydrodesulfurization on delayed-coker yields.[7] Yields for three alternative operations on Kuwait atmospheric residue were estimated and are presented as follows:

Figure 12.2.11 shows a scheme in which atmospheric residue is sent to a vacuum flasher and the resulting vacuum residue is fed to a delayed coker. Figure 12.2.12 shows a scheme in which atmospheric residue is sent to a residue hydrodesulfurizer. The resultant 650°F+ residue is then charged to the delayed coker. Figure 12.2.13 is the same scheme as Fig. 12.2.12 except that the 650°F+ desulfurized residue is charged to a vacuum flasher. The desulfurized vacuum residue is then charged to the delayed coker.

A comparison of the overall yields for the three cases is summarized in Table 12.2.5. From this table it is easy to see how residue hydrodesulfurization of the feedstock increases the yield of desirable liquid products.

YIELDS AND PRODUCT PROPERTIES

This section describes the reactions and the types of products which normally are produced by delayed cokers and gives typical yield predictions for these products. Also given is information on product impurities and typical product properties.

Downloaded from Digital Engineering Library @ McGraw-Hill (www.digitalengineeringlibrary.com)
Copyright © 2004 The McGraw-Hill Companies. All rights reserved.
Any use is subject to the Terms of Use as given at the website.

FW DELAYED-COKING PROCESS

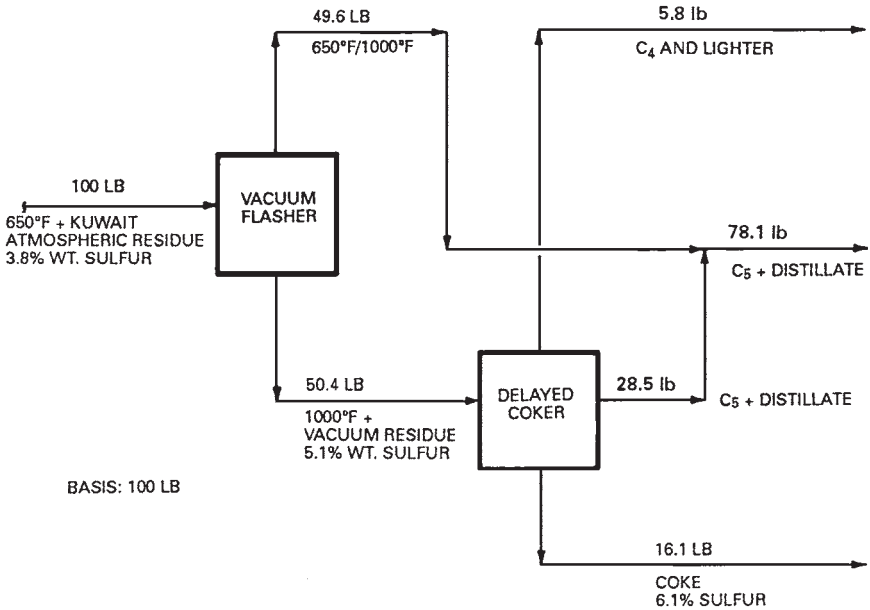

FIGURE 12.2.11 Scheme A: vacuum distillation followed by delayed coking.

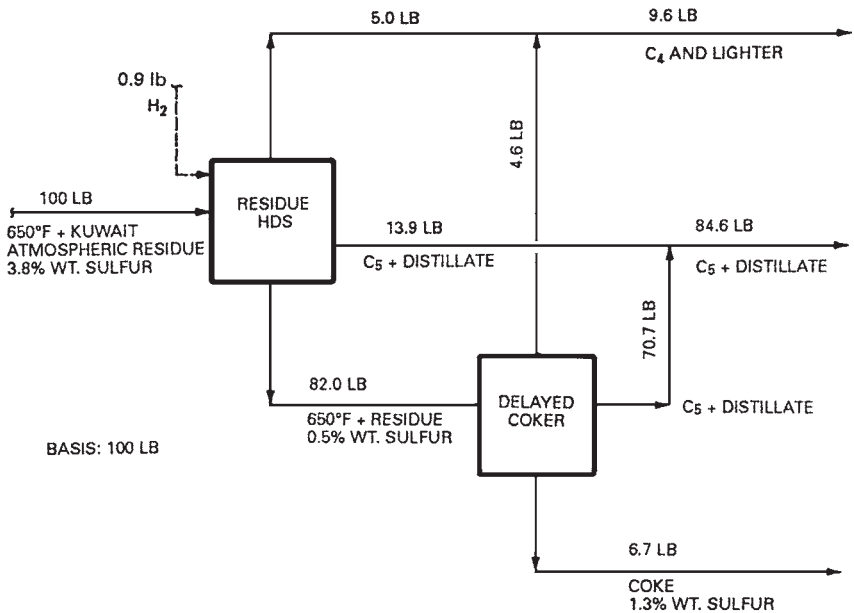

FIGURE 12.2.12 Scheme B: residue hydrodesulfurization followed by delayed coking.

Downloaded from Digital Engineering Library @ McGraw-Hill (www.digitalengineeringlibrary.com)
Copyright © 2004 The McGraw-Hill Companies. All rights reserved.
Any use is subject to the Terms of Use as given at the website.

FW DELAYED-COKING PROCESS

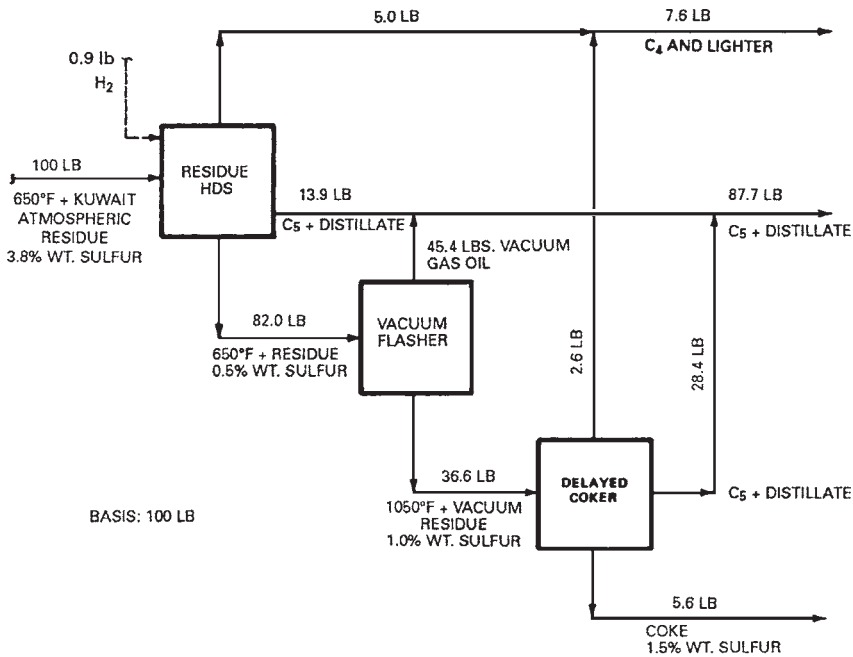

FIGURE 12.2.13 Scheme C: residue hydrodesulfurization followed by vacuum distillation followed by delayed coking.

TABLE 12.2.5

Comparison of Estimated Overall Yields of Delayed Coking plus Residue Hydrodesulfurization

Properties of feedstock	
Crude source	Kuwait
TBP cut point, °C	343+
Density, °API	16.6
Conradson carbon residue wt %	9.0
Sulfur, wt %	3.8

Yields, wt %	Vacuum flasher plus delayed coker	Residue hydrodesulfurizer–plus delayed coker	Residue hydrodesulfurizer–vacuum flasher plus delayed coker
C_4 and lighter	5.8	9.6	7.6
C_5 + distillate	78.1	84.6	87.7
Coke	16.1	6.7	5.6
Total	100.0	100.9	100.9

Downloaded from Digital Engineering Library @ McGraw-Hill (www.digitalengineeringlibrary.com)
Copyright © 2004 The McGraw-Hill Companies. All rights reserved.
Any use is subject to the Terms of Use as given at the website.

FW DELAYED-COKING PROCESS

Reactions

Delayed coking is an endothermic reaction with the furnace supplying the necessary heat to complete the coking reaction in the coke drum. The exact mechanism of delayed coking is so complex that it is not possible to determine all the various chemical reactions that occur, but three distinct steps take place:

1. Partial vaporization and mild cracking of the feed as it passes through the furnace
2. Cracking of the vapor as it passes through the coke drum
3. Successive cracking and polymerization of the heavy liquid trapped in the drum until it is converted to vapor and coke

Products

Four types of products are produced by delayed coking: gas, naphtha, gas oil, and coke. Each of these products is discussed briefly below.

Gas. Gas produced in the coker is fed to a vapor-recovery unit, where LPG and refinery fuel gas are produced. Typically, the LPG, after treatment for H_2S and mercaptan removal, is split into separate C_3 and C_4 products. Coker LPG can also be used as alkylation or polymerization unit feedstock. For this purpose, the coker LPG is often mixed with catalytic cracker LPG.

Naphtha. Light coker naphtha, after stabilization in the vapor-recovery unit, is often mercaptan-sweetened and then used in the gasoline pool. Heavy coker naphtha can be hydrotreated and used either as catalytic-reformer feedstock or directly in the gasoline pool.

Gas Oil. Light coker gas oil can be hydrotreated for color stabilization and used in the refinery distillate blend pool for No. 2 heating oil. The heavy or the total coker gas oil is commonly used as catalytic cracker or hydrocracker feedstock. This use of the coker gas oil can result in a considerable increase of refinery gasoline, jet fuel, or diesel production.

Coke. Depending on the unit feedstock and operating conditions, different types of cokes an be produced. These are discussed in detail in the sections "Feedstocks" and "Uses of Petroleum Coke."

Predicting Yields

Because the correlations used to predict coking yields are, in general, considered to be proprietary information to the companies which have developed these correlations, relatively little information is given in the published literature on how to predict coking yields. Nelson[10] and Gary and Handwerk[5] give some simple correlations which, as shown and discussed below, are adequate to make very rough coking yield estimates. For more precise yield predictions, more sophisticated correlations, developed from nonpublished comprehensive pilot plant data and/or from commercial operating data, must be used instead.

Predicting Yield of Coke. The most important parameter in predicting the yield of coke is the CCR (weight percent) in the feed. Figure 12.2.14, developed by Nelson,[10]

Downloaded from Digital Engineering Library @ McGraw-Hill (www.digitalengineeringlibrary.com)
Copyright © 2004 The McGraw-Hill Companies. All rights reserved.
Any use is subject to the Terms of Use as given at the website.

FW DELAYED-COKING PROCESS

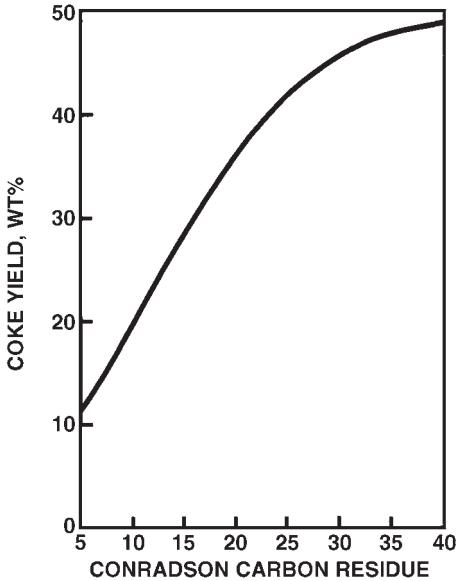

FIGURE 12.2.14 Rough estimation of coke yields from straight-run residue. [*Courtesy of Pennwell Publishing Company, publishers of the* Oil and Gas Journal, ***74,*** *60 (May 24, 1976).*]

shows a very simple correlation which can be used to predict a rough preliminary coke yield based only on CCR.

An even simpler correlation for estimating a rough coke yield is the following equation, as given by Gary and Handwerk,[5]

$$\text{Coke yield (wt \%)} = 1.6 \times \text{CCR} \tag{12.2.1}$$

Figure 12.2.14 and Eq. (12.2.1) are suitable for predicting preliminary coke yields to within an accuracy of perhaps ±25 percent. More precise predictions can be made only by using more sophisticated proprietary correlations which are a function not only of CCR but of other additional parameters such as the variables described in the section "Operating Variables."

Predicting Yields of Gas and Liquid Products. As in predicting the yield of coke, the CCR is still the most important single parameter for predicting the yields of gas and liquid products. Gary and Handwerk[5] give the following set of equations which can be used to make rough preliminary estimates of the yield of gas and liquid products as a function of CCR:

$$\text{Gas yield (wt \%)} = 7.8 + 0.144 \times \text{CCR} \tag{12.2.2}$$

$$\text{Naphtha yield (wt \%)} = 11.29 + 0.343 \times \text{CCR} \tag{12.2.3}$$

$$\text{Gas oil yield (wt \%)} = 100 - \text{coke yield} - \text{gas yield} - \text{naphtha yield} \tag{12.2.4}$$

Downloaded from Digital Engineering Library @ McGraw-Hill (www.digitalengineeringlibrary.com)
Copyright © 2004 The McGraw-Hill Companies. All rights reserved.
Any use is subject to the Terms of Use as given at the website.

FW DELAYED-COKING PROCESS

Once again, if more precise values are required, more sophisticated proprietary correlations, which are a function of many additional parameters, must be used instead.

Distribution of Impurities among Products

The two impurities in the products from delayed coking which are of greatest concern are sulfur and metals. As a rule of thumb, the weight percent of sulfur in the coke will be somewhat greater than that in the feedstock. The ratio of these two numbers will usually range between 1:1 (or slightly less) and 2:1. The weight percent of sulfur in the other products varies greatly with each particular feedstock, and although some limited information is published,[12] it is nevertheless difficult to make any generalizations as to how the sulfur will be distributed. With regard to metals, the bulk of the metals present in the feedstock generally will concentrate in the coke, with a very small percentage remaining in the heavy gas oil product.[13]

Typical Yields and Product Properties

Table 12.2.6 presents typical delayed-coking yield estimates for the various vacuum-residue feedstocks defined in Table 12.2.2. The feedstocks have been selected to illustrate typical coking yields over a wide range of feedstock characteristics varying from 4.0° API and 22.0 wt % CCR to 12.8° API and 5.2 wt % CCR. The metals content in the feedstocks varies from 44 to 910 wt ppm (Ni + V). All the yields are presented at conditions of constant recycle ratio and pressure. The delayed-coking yields presented in Table 12.2.6 have been estimated by generalized correlations developed by Foster Wheeler on the basis of previous pilot-plant work and commercial operations.

For the typical yields presented in Table 12.2.6 we see that the yield of dry gas varies between 6.2 and 10.5, the yield of naphtha between 17.4 and 21.4, the yield of gas oil between 33.0 and 65.3, and the yield of coke between 10.0 and 35.1. These estimated values are not meant to represent any absolute maximum or minimum for any of the yields given, but rather a typical range over which yields may vary.

TABLE 12.2.6 Typical Yields and Product Properties as Estimated for Various Delayed-Coker Feedstocks at Constant Recycle Ratio and Pressure

	Crude source			
Products	African	Southeast Asian	Mexican	Middle East
Dry gas and C_4, wt %	6.2	7.4	10.5	9.2
C_5- 193°C, naphtha, wt %	18.5	20.4	21.4	17.4
Density, °API	56.1	62.3	54.9	58.3
Sulfur, wt %	0.1	0.2	0.9	0.5
193°C+, gas oil, wt %	65.3	54.5	33.0	48.5
Density, °API	22.4	34.9	20.5	25.3
Sulfur, wt %	0.59	0.42	4.26	2.28
Coke, wt %	10.0	17.7	35.1	24.9
Sulfur, wt %	1.1	0.8	6.4	5.1
Ni + V, wt ppm	500	249	2592	361

Downloaded from Digital Engineering Library @ McGraw-Hill (www.digitalengineeringlibrary.com)
Copyright © 2004 The McGraw-Hill Companies. All rights reserved.
Any use is subject to the Terms of Use as given at the website.

FW DELAYED-COKING PROCESS

All the yields and properties given in Table 12.2.6 are for vacuum-residue feedstocks which produce regular grade coke. Yields and properties for special feedstocks which produce needle coke are given in Table 12.2.7. The high coke yields shown in Table 12.2.7 are consistent with the philosophy of selecting operating conditions which would favor the production of needle coke for the special feedstocks which are being processed.

OPERATING VARIABLES

Three basic operating variables contribute to the quality and yields of delayed-coking products. They are temperature, pressure, and recycle ratio. Each of these is discussed below, and typical ranges are shown in Table 12.2.8.

Temperature

Temperature is used to control the volatile combustible material (VCM) content of the coke product. The current trend is to produce coke with a VCM ranging between 6.0 and 8.0 wt %. This results in a harder coke and, if structure and impurity levels are acceptable, in a more desirable aluminum-grade coke. At constant pressure and recycle ratio the coke yield decreases as the drum temperature increases. Since delayed coking is an endothermic reaction, the furnace supplies all the necessary heat to promote the coking reaction. If the temperature is too low, the coking reaction does not proceed far enough and pitch or soft-coke formation occurs. When the temperature is too high, the coke formed generally

TABLE 12.2.7 Estimated Yields and Product Properties for Needle-Coke Production

	Visbroken thermal tar	Decanted oil
Feed:		
°API	2.4	−0.66
Sulfur, wt %	1.0	0.45
Products:		
Dry gas+C_4, wt %	14.4	9.8
C_5 − 193°C, wt %	16.7	8.4
°API	54.9	59.8
Sulfur	0.04	0.01
193°C+, wt %	15.7	41.6
°API	23.3	16.9
Sulfur, wt %	0.7	0.34
Coke, wt %	53.2	40.2
Sulfur, wt %	1.0	0.60

TABLE 12.2.8 Operating Variables: Typical Ranges

Heater outlet temperature, °C	468–524
Top coke-drum pressure, lb/in^2 gage	15–150
Recycle ratio, volume recycle/volume fresh feed	0.05–2

Downloaded from Digital Engineering Library @ McGraw-Hill (www.digitalengineeringlibrary.com)
Copyright © 2004 The McGraw-Hill Companies. All rights reserved.
Any use is subject to the Terms of Use as given at the website.

FW DELAYED-COKING PROCESS

is very hard and difficult to remove from the coke drum with hydraulic decoking equipment. Higher temperatures also increase the potential of coking the furnace tubes and/or transfer line. Thus, the furnace outlet temperature and the corresponding coke-drum vapor temperature must be maintained within narrow limits. Although there is an incentive to increase the coke-drum temperature to offset the loss in liquid yield associated with the trend to heavier feedstocks, there is often very little latitude available to do so.

Pressure

At constant temperature and recycle ratio, the effect of increased pressure is to retain more of the heavy hydrocarbons in the coke drum. This increases the coke yield and slightly increases the gas yield while decreasing the pentane and heavier liquid-product yield. The trend in the design of delayed cokers which maximize the yield of clean liquid products is to design for marginally lower operating pressures. This tendency is the result of close scrutiny of conditions which affect refining profit margins. The use of a heavier coker feedstock which produces fuel-grade coke having a market value 15 to 30 percent of that for aluminum-grade coke drives design economics to the absolute minimum coke yield, even though it results in an increased expense for vapor-handling capacity. As a result, units are currently being designed with coke-drum pressures as low as 15 lb/in^2 gage. Table 12.2.9[7] compares the effect on delayed-coker yields of a 15-lb/in^2 gage coke-drum pressure with that of a more traditional 35-lb/in^2 gage pressure for the same feedstock at constant conditions of recycle ratio and temperature.

This tendency to operate at lower pressure applies to most standard operations but does not apply to the special case of needle coke production. For needle coke production, a pressure as high as 150 lb/in^2 gage may be required.[15]

TABLE 12.2.9

Estimated Effect of Pressure on Delayed-Coking Yields

Feedstock	
Crude source	Alaskan North Slope
TBP cut point, °C	566+
Density, °API	7.4
Conradson carbon, wt %	18.1
Sulfur, wt %	2.02

Estimated yields at constant recycle ratio

	Coke-drum pressure	
Products	15 lb/in^2 gage	35 lb/in^2 gage
Dry gas + C_4, wt %	9.1	9.9
C_5 – 380°F, naphtha, wt %	12.5	15.0
Density, °API	60.4	57.1
Sulfur, wt %	0.5	0.5
380°F+, gas oil, wt %	51.2	44.9
Density, °API	23.8	26.0
Sulfur, wt %	1.36	1.22
Coke, wt %	27.2	30.2
Sulfur, wt %	2.6	2.6

Source: R. DeBiase and J. D. Elliott, "Recent Trends in Delayed Coking," NPRA Annual Meeting, San Antonio, March 1982.

Downloaded from Digital Engineering Library @ McGraw-Hill (www.digitalengineeringlibrary.com)
Copyright © 2004 The McGraw-Hill Companies. All rights reserved.
Any use is subject to the Terms of Use as given at the website.

FW DELAYED-COKING PROCESS

Recycle Ratio

Recycle ratio has the same general effect as pressure on product distribution; i.e., as the recycle ratio is increased, the coke and gas yields increase while the pentane and heavier liquid yield decreases. The recycle ratio is used primarily to control the endpoint of the coker gas oil. The same economics which are forcing the operation of cokers to lower operating pressures are also at work on recycle ratios. Units operating at recycle ratios as low as 3 percent have been reported. In general, a refinery operates at as low a recycle ratio as product quality and unit operation will permit.

Other Variables

Although our discussion in this section has been directed solely to operating (or process) variables, it is possible to consider delayed coking as dependent upon three interrelated classes of variables.[16] These are feedstock variables, processing variables, and engineering variables. Figure 12.2.15 gives an interesting graphical representation of each of these variables.

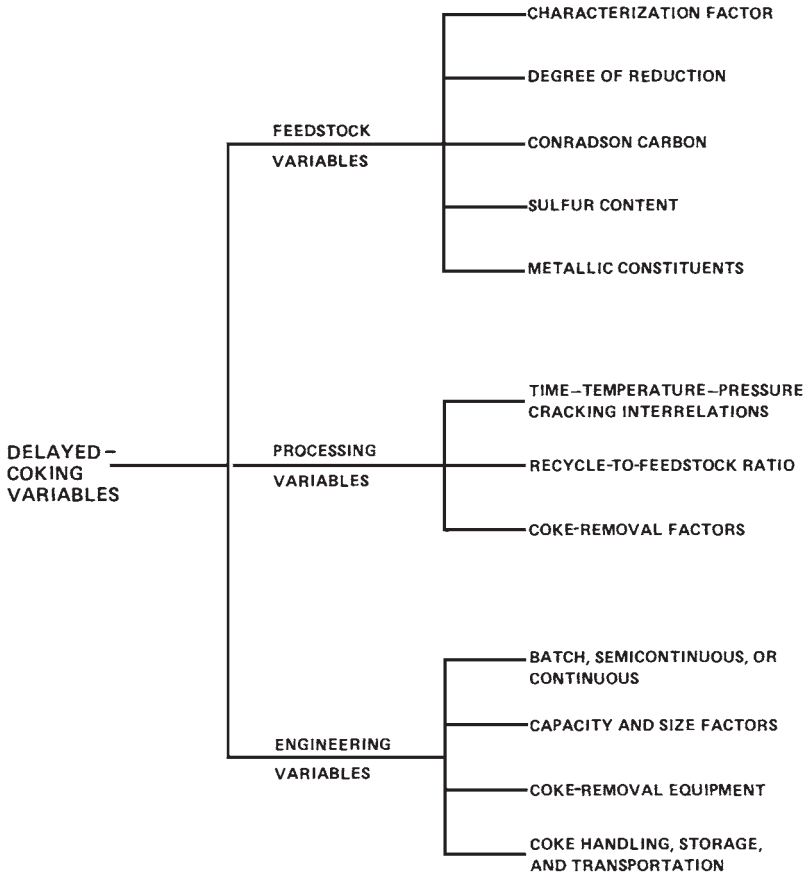

FIGURE 12.2.15 Interrelated delayed-coking variables [*Courtesy of McGraw-Hill Book Company* (*Virgil B. Guthrie, Petroleum Products Handbook, McGraw-Hill, New York, 1960*).]

Downloaded from Digital Engineering Library @ McGraw-Hill (www.digitalengineeringlibrary.com)
Copyright © 2004 The McGraw-Hill Companies. All rights reserved.
Any use is subject to the Terms of Use as given at the website.

FW DELAYED-COKING PROCESS

COKER HEATERS

Careful heater design is critical to successful delayed-coking operation and to the achievement of desirable long run lengths. The major design parameters which influence heater operation are discussed below.

Heater Design

Figure 12.2.16 is a simple sketch of a typical delayed-coker heater. Coker heater design has been modified in recent years in response to refiners' needs for longer run lengths

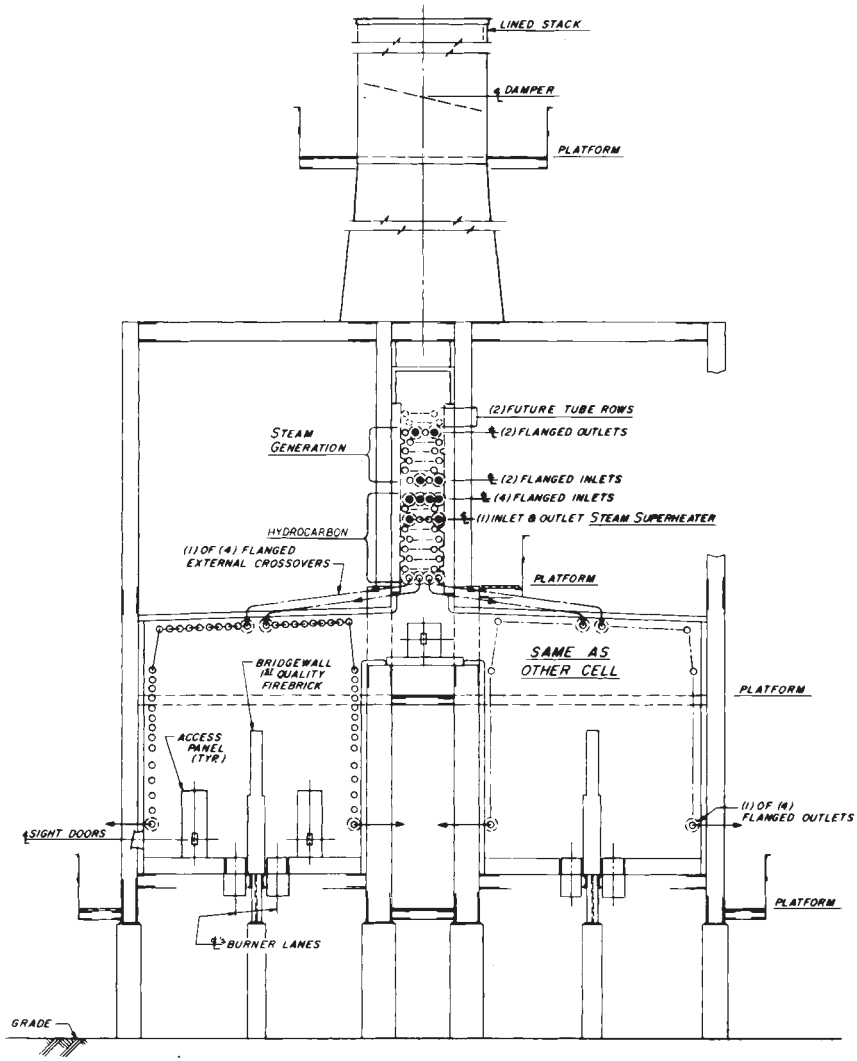

FIGURE 12.2.16 Typical coker heater: sectional end elevation.

Downloaded from Digital Engineering Library @ McGraw-Hill (www.digitalengineeringlibrary.com)
Copyright © 2004 The McGraw-Hill Companies. All rights reserved.
Any use is subject to the Terms of Use as given at the website.

FW DELAYED-COKING PROCESS

between decoking while processing heavier, higher-CCR feedstocks. There is a trend to design for higher cold-oil velocities in the order of 6 ft/s and provide for the multiple injection of steam into the heater coil to adjust coil residence time and velocity.

On a number of recent designs, in addition to more liberal firebox dimensions, there has been a tendency to specify lower allowable average radiant-flux rates in the order of 9000 Btu/(h · ft^2) to provide for longer run lengths, future capacity allowances, and, in general, a more conservative heater design. By way of comparison, traditional allowable average radiant-flux rates range from 10,000 to 12,000 Btu/(h · ft^2).

During the operation of the delayed coker unit, coke slowly deposits on the inside of the heater tubes. This results in higher pressure drop and higher tube metal temperatures. When one or both of these operating variables exceed design levels the heater must be decoked. The duration of time from the time the heater is put on-stream until it is shut down is defined as the *run length.*

Heater run length is affected by feedstock quality, operation conditions and the consistency with which they are maintained, and the frequency and handling of upset operations. Run lengths varying between 9 and 12 months can be expected, with run lengths of 18 months or longer being reported.

On-line spalling is a technique that is sometimes used to extend the heater run length of multipass heaters beyond these values. On-line spalling does not require a heater shutdown with a resultant loss of unit production. In this technique, the passes of the heater are decoked one at a time while the other passes remain in coking service. For the pass being spalled, the hydrocarbon fresh feed is shut off and a spalling medium, either steam or condensate, is immediately introduced to that pass. The rate and temperature of the medium are cycled in a prescribed manner so that the coke is thermally stressed until it breaks off the heater tubes and is swept into the coke drums. The flow of hydrocarbon to the other passes is sometimes increased to compensate for the loss from coking service of the pass being spalled.

The effectiveness of on-line spalling is shown in Fig. 12.2.17, a plot of tube skin temperatures versus time for each pass of a four-pass heater. There are temperatures in a band between 1140 and 1180°F which are the target temperatures for applying the on-line spalling procedure. The figure illustrates the effect of the on-line spalling procedure on skin temperatures when practiced at the end of April and the beginning of August. It shows that the heater run length would have been only 3 months if the on-line spalling procedure had not been used. It has been reported by some refiners that the effectiveness of the procedure deteriorates after every cycle and that ultimately the heater needs to be shut down and decoked; other refiners have reported that the effectiveness is constant and that the heater can be run indefinitely by practicing on-line spalling. In any event, refiners have reported run lengths greater than 2 years.

The alternative to on-line spalling is to shut down the heater and decoke it by either steam-air decoking or by pigging. Steam-air decoking utilizes steam and air to first spall some of the coke from the heater tubes and then to burn off the remaining coke. In pigging, the pig, a semiflexible plug with projections, is inserted into the tubes and circulated in a water stream. The projections scrape the coke off the inside of the tubes.

The effect of energy conservation on modern heater design is discussed in the section "Typical Utility Requirements."

HYDRAULIC DECOKING

Unheading Device

Coke drums have a large, flanged opening approximately 6 ft in diameter at the bottom to facilitate the decoking operation. At most times this opening is closed by a large metal

Downloaded from Digital Engineering Library @ McGraw-Hill (www.digitalengineeringlibrary.com)
Copyright © 2004 The McGraw-Hill Companies. All rights reserved.
Any use is subject to the Terms of Use as given at the website.

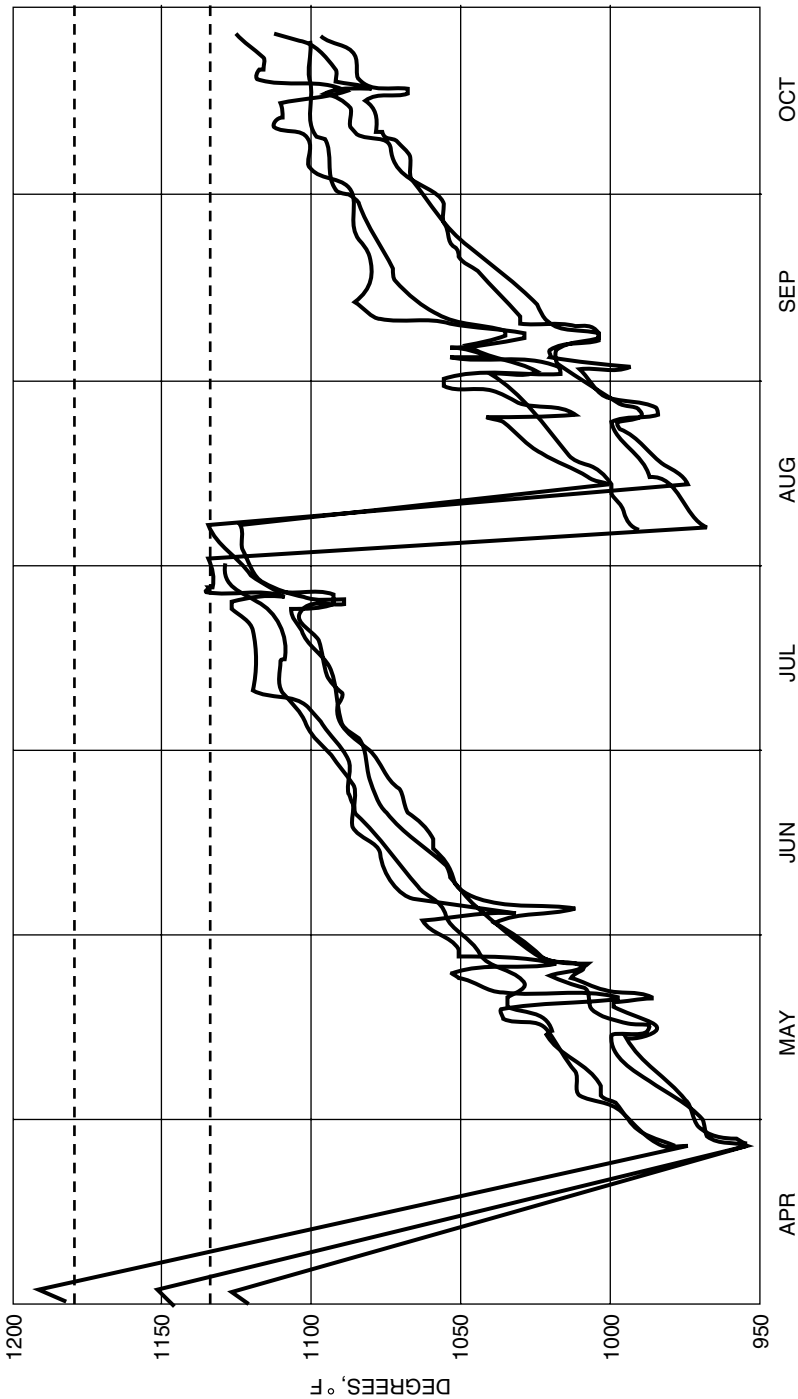

FIGURE 12.2.17 Effectiveness of on-line spalling as measured by tube skin temperatures on a four-pass furnace.

Downloaded from Digital Engineering Library @ McGraw-Hill (www.digitalengineeringlibrary.com)
Copyright © 2004 The McGraw-Hill Companies. All rights reserved.
Any use is subject to the Terms of Use as given at the website.

FW DELAYED-COKING PROCESS

cover containing a nozzle, called a *head.* In order to remove the coke from the drum the head is removed and a chute is attached to the flange. The chute directs the coke away to the coke handling and coke dewatering area. The head is removed after the coke is cooled and the cooling water is drained from the coke drum.

Traditionally, the head was lowered on to an unheading cart. Recently, attention has been paid to facilitating this operation by the development of automatic unheading systems. One such system was developed by Foster Wheeler. The Foster Wheeler bottom coke drum unheading device is designed for remote-controlled hydraulic raising and lowering of the coke drum bottom head and coke chute. It dramatically improves the safety and ease of the unheading operation by making it possible to have all the operators at a safe distance from the coke drum when the bottom cover first separates from the drum as well as when the coke chute is raised to its decoking position.

Unlike other devices, the Foster Wheeler system not only separates the head from the coke drum, but also moves the head out of the way and raises the coke chute up to the drum in preparation for the decoking operation. When the decoking operation is complete, the coke chute is lowered and the bottom cover is raised to prepare for the next coking cycle, all from a remote location.

The Foster Wheeler unheading system operates without a cart. Instead, it uses a skid and cradle assembly to move the head out of the way from under the drum. This is an improvement over previous designs in that it reduces the possibility of cart failure, minimizes floor loadings, and allows for safer operation.

The new unheading system holds the bottom cover in place while the cover bolts are safely removed. The unheading device and vertical cylinders are capable of withstanding the total load of coke and water in the drum that may be applied on the bottom cover.

In this system, the vertical cylinders are attached to the concrete support structure. With this design, the load applied by the vertical cylinders is transferred to the structure directly.

A computer-aided design (CAD) representation of the unheading system is in Fig. 12.2.18. Three views are depicted. The top-left view shows the device in coking position with the head raised to meet the coke drum flange and the inlet piping connected. The top-right view shows the device right after unheading with the inlet piping detached and the bottom head moved away from the drum. The bottom view shows the device in the decoking position. The telescopic chute is raised and attached to the bottom flange of the coke drum.

Description of System

In early delayed-coking units, cable decoking was used to remove the coke from the drums. Later a more sophisticated method was developed. This method employed a hydraulically operated mechanical drill to remove the coke from the drums. In the late 1930s hydraulic decoking was introduced and is still in use today.

Today hydraulic decoking utilizing high-impact water jets, which operate at approximately 2000 to 4000 lbf/in^2, is the standard method of removing coke formed in the coke drums. This method has replaced older methods, such as coiled wires and mechanical drills. These older methods were unsuitable for larger drums and were costly in terms of maintenance.

In hydraulic decoking, the coke is cut as the water jet impacts on the coke. Both boring and cutting tools are used; each tool produces several jets of water from high-pressure nozzles. The coke is removed in essentially two operations:

1. The boring tool, with jet nozzles oriented vertically downward, is used to bore hydraulically a pilot hole, which is typically 2 to 3 ft in diameter, down through the coke from the top. See Fig. 12.2.19 for a typical sketch of a boring tool.

Downloaded from Digital Engineering Library @ McGraw-Hill (www.digitalengineeringlibrary.com)
Copyright © 2004 The McGraw-Hill Companies. All rights reserved.
Any use is subject to the Terms of Use as given at the website.

FW DELAYED-COKING PROCESS

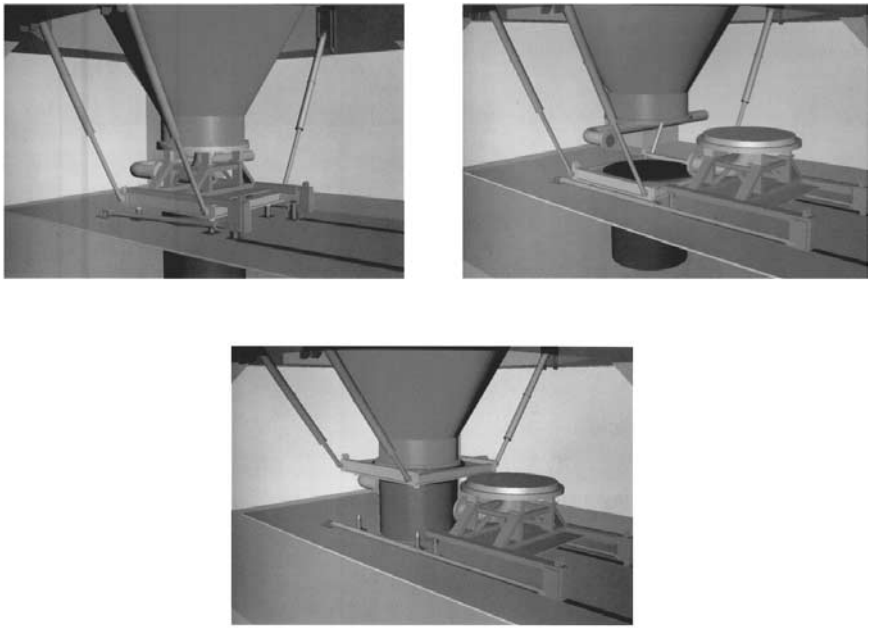

FIGURE 12.2.18 Foster Wheeler's advanced coke drum unheading system.

2. The cutting tool, with jet nozzles oriented horizontally, is used to cut hydraulically the coke from the drum after the pilot hole has been drilled. See Fig. 12.2.20 for a sketch of a typical cutting tool.

Effective boring and cutting by the water jets are accomplished by rotating and lowering the respective tools into the drum. The boring and cutting tools are attached to a hollow drill stem which also rotates and supplies high-pressure water to the boring and cutting tools. The drill stem is rotated by an air motor connected to the power swivel. The power swivel is the rotary joint which connects the nonrotating water-supply line to the drill stem.

The high-pressure water is supplied to the cutting assembly by the jet pump and delivered via a piping manifold and rotary drilling hose connected to the power swivel.

The drill stem and power swivel assembly are raised and lowered by an air-motor hoist via a wire rope and a set of sheave blocks. The power swivel is attached to a crosshead which is guided in its vertical travel by a pair of channel-type crosshead guides. A drill rig is used to support the entire assembly. Figure 12.2.21 indicates the relationship of the major components in the hydraulic-decoking system.

Sequence of Operations

The sequence for cutting the coke out of a drum is shown schematically in Fig. 12.2.22 and is outlined in the following four steps:

1. Hydraulically bore a pilot hole through the coke with high-pressure cutting water.
2. Replace the boring tool with the final cutting tool and widen the original pilot hole.
3. Remove coke from the bottom cone section.

Downloaded from Digital Engineering Library @ McGraw-Hill (www.digitalengineeringlibrary.com)
Copyright © 2004 The McGraw-Hill Companies. All rights reserved.
Any use is subject to the Terms of Use as given at the website.

FW DELAYED-COKING PROCESS

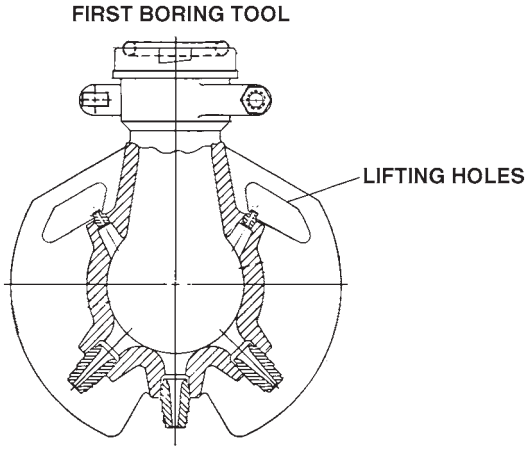

FIGURE 12.2.19 Boring tool for hydraulic decoking. (*Courtesy of Worthington Division, McGraw Edison Co.*)

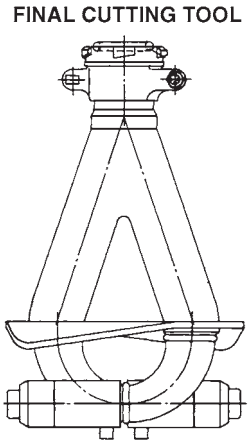

FIGURE 12.2.20 Final cutting tool for hydraulic decoking. (*Courtesy of Worthington Division, McGraw Edison Co.*)

4. Cut coke out of the drum, starting from the top and working downward in layers.

Care must be taken in the procedures employed in carrying out steps 1 and 2 in order to minimize the amount of undesirable coke fines that are produced in the decoking operation.

COKE-HANDLING AND -DEWATERING SYSTEMS

During the decoking operation, large volumes of coke and drilling water drop out of the bottom of the coke drum. The most common coke-dewatering and -handling systems

Downloaded from Digital Engineering Library @ McGraw-Hill (www.digitalengineeringlibrary.com)
Copyright © 2004 The McGraw-Hill Companies. All rights reserved.
Any use is subject to the Terms of Use as given at the website.

FW DELAYED-COKING PROCESS

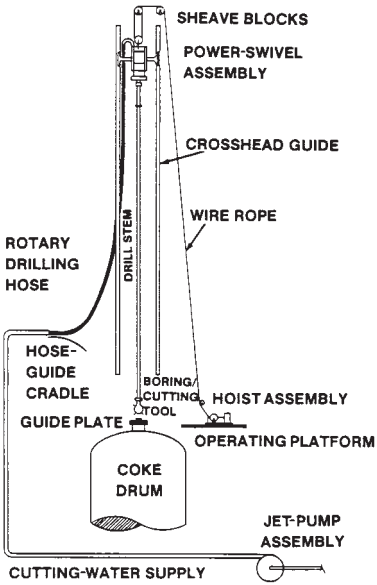

FIGURE 12.2.21 Details of the hydraulic decoking system.

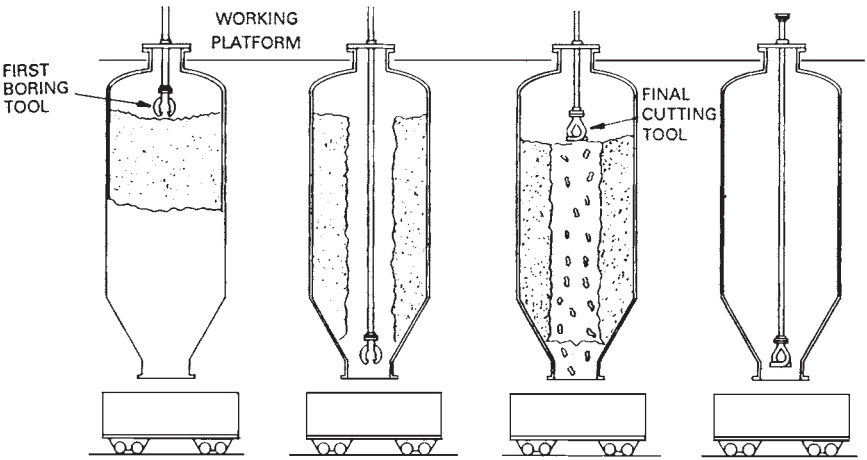

FIGURE 12.2.22 Coke removal via hydraulic decoking.

Downloaded from Digital Engineering Library @ McGraw-Hill (www.digitalengineeringlibrary.com)
Copyright © 2004 The McGraw-Hill Companies. All rights reserved.
Any use is subject to the Terms of Use as given at the website.

FW DELAYED-COKING PROCESS

are direct railcar loading, pad loading, pit loading, and dewatering bins.[7] Each of these systems is discussed below.

Direct Railcar Loading

Direct railcar loading is usually restricted to two drum cokers. This system allows coke and water to drop from the coke drum directly into a railcar positioned underneath the coke drum. The water and some coke fines drain from the car and are directed into a sump. Final removal of coke fines from the water before its reuse is generally accomplished by a clarifier. Although direct railcar loading has the lowest investment, the disadvantage of this system is the dependency of the decoking operation on the availability and movement of railcars. Figure 12.2.23[7] depicts a typical schematic of the decoking water system associated with direct railcar loading.

Pad Loading

Pad loading is generally limited to two or four drum cokers. This system allows the coke and water to drop out of the drum, through a chute, directly onto a large concrete pad adjacent to the coke drums. In traditional designs, water and coke fines then flow through a series of ports located at the periphery of the pad. The ports are packed with sized coke as a filtering medium. Most of the coke fines are thus recovered on the pad before the water reaches a settling maze. There, entrained coke fines are allowed to settle out before the clear water is pumped back to the decoking-water surge tank for reuse. The coke is removed from the pad by a front-end loader.

Although pad loading places no constraints on the rate at which the coke can be removed from a drum, within the general limitations of the equipment, the large area required for drainage and short coke-storage time present disadvantages. The front-end-loader operation usually associated with pads can tend to increase the generation of coke fines.

Foster Wheeler has recently developed a potentially patentable innovation in pad design which eliminates the need for packing the maze inlet ports with coke. This design utilizes a sump to trap the fines carried off the pad by the cutting water. The water flows out of the sump into the maze through special removable coke-filled baskets which filter out unsettled fines. Flushing-water circuits are provided for agitating the fines in the sump and backflushing the baskets. A slurry pump is provided to remove the slurried fines trapped in the sump. The fines may be recovered by pumping them into a partially filled railcar or over the coke-storage pile. Figure 12.2.24[17] shows the general layout of this type of pad-loading operation.

Pit Loading

Pit systems are similar to both direct-railcar-loading and pad-loading operations. In pit systems, however, the coke and water empty into a rectangular concrete pit generally located below grade. The decoking water drains out through ports at one or both ends of the pit, depending on the size of the facility. A "heel" of coke located in front of these ports acts to filter fines from the water. The remaining coke fines settle out in the maze before the clear water is pumped to the decoking-water storage tank.

Pit design inherently provides several days' storage of coke, presenting an advantage over pad loading. An overhead bridge crane with a clamshell bucket is required to remove the coke from the pit. Figure 12.2.25 depicts a general pit-loading operation.

Downloaded from Digital Engineering Library @ McGraw-Hill (www.digitalengineeringlibrary.com)
Copyright © 2004 The McGraw-Hill Companies. All rights reserved.
Any use is subject to the Terms of Use as given at the website.

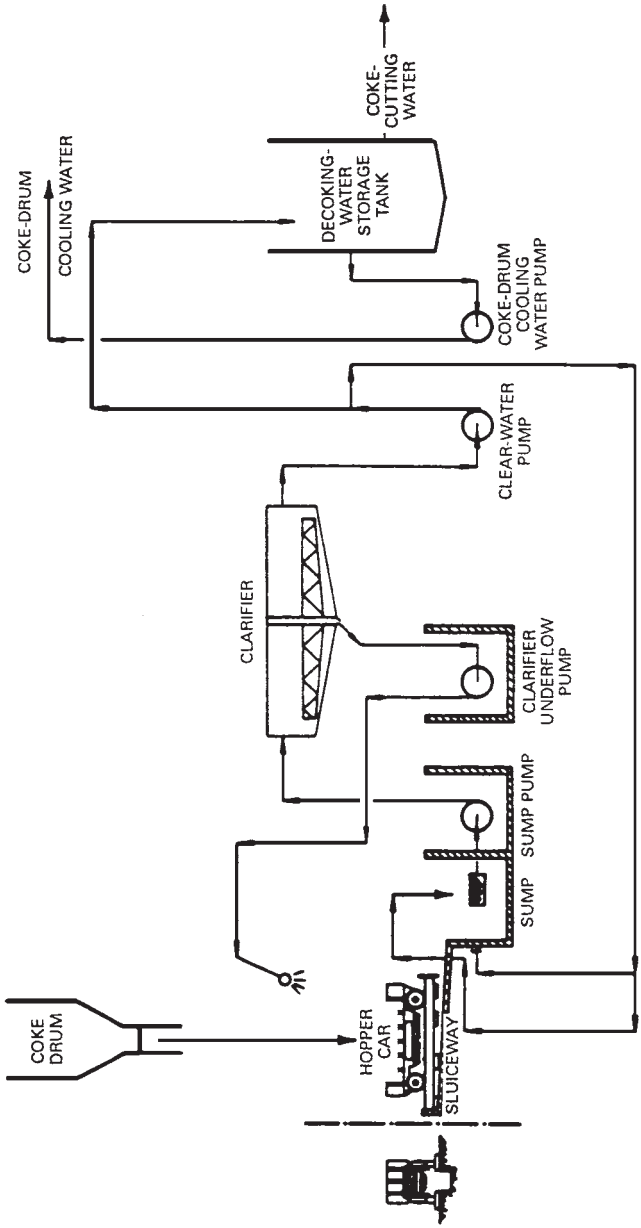

FIGURE 12.2.23 Decoking water system for direct railcar loading.

Downloaded from Digital Engineering Library @ McGraw-Hill (www.digitalengineeringlibrary.com)
Copyright © 2004 The McGraw-Hill Companies. All rights reserved.
Any use is subject to the Terms of Use as given at the website.

FW DELAYED-COKING PROCESS

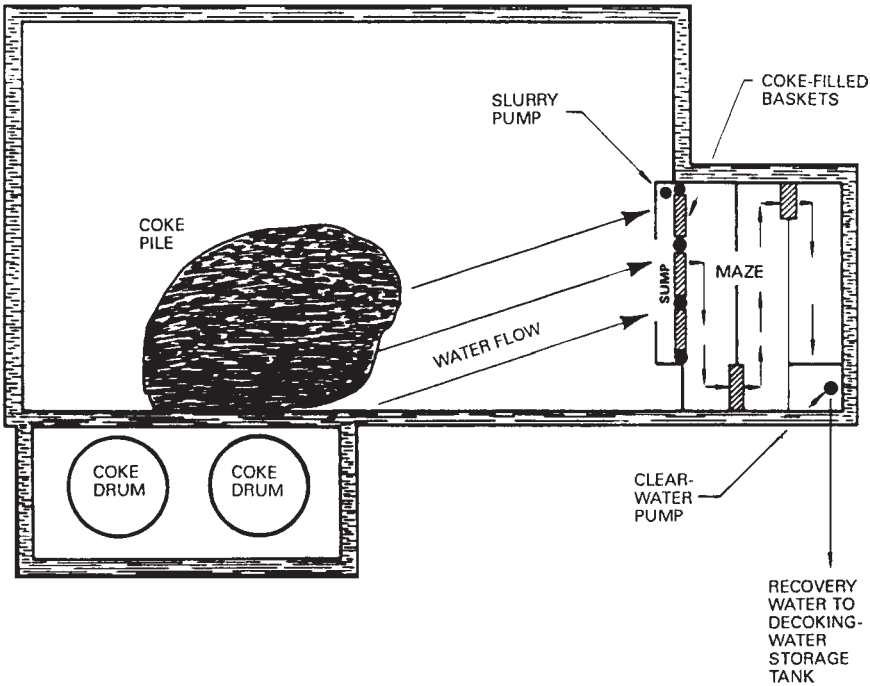

FIGURE 12.2.24 Coke handling: pad loading.

Dewatering Bins

Foster Wheeler has recently developed two different dewatering-bin systems. Both designs evolved from the concept of the traditional slurry-type dewatering-bin system commercially in use for several decades. Dewatering is accomplished through the use of special vessels, known as dewatering bins or drainage silos, for dewatering coke. The two types of dewatering-bin systems are known as *slurry* and *gravity-flow.* In both designs, coke and cutting water pass through a coke crusher. Either system may be totally enclosed to meet exceptional environmental requirements or to prevent coke contamination in areas where sandstorms may present a problem. Conventional unenclosed slurry-type dewatering-bin systems employing an open sluice have been available for more than 30 years.

Slurry System.

The slurry system allows coke and water from the crusher to drop into a sluice, where the mixture is washed into a slurry sump. From this sump, a slurry pump transports the coke and water to the dewatering bin. Here the coke settles, and the water is drained off. Final separation of coke fines from the water is accomplished either by a clarifier or by a special decanter. The dewatered coke is moved from the bin onto a conveyor or directly into railcars or trucks. The slurry system provides a relatively clean operation that allows the coke drums to be located close to the grade. This system, however, requires recirculation of relatively large volumes of water. With appropriate know-how, the slurry system can be adapted as a totally enclosed system which will meet exceptional environmental

Downloaded from Digital Engineering Library @ McGraw-Hill (www.digitalengineeringlibrary.com)
Copyright © 2004 The McGraw-Hill Companies. All rights reserved.
Any use is subject to the Terms of Use as given at the website.

FW DELAYED-COKING PROCESS

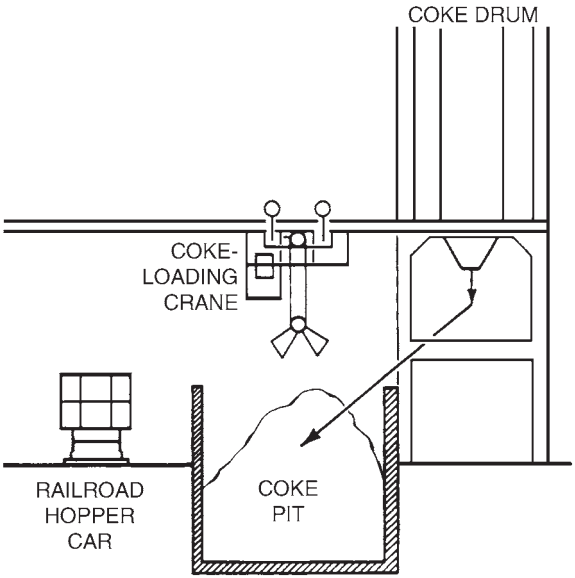

FIGURE 12.2.25 Coke handling: pit operation.

requirements. Figures 12.2.26 and 12.2.27 provide a schematic of a totally enclosed slurry system and illustrate a typical elevation view of the coke-drum structure.

Gravity System. In the innovative gravity-flow system, coke and water from the crusher drop into a dewatering bin located directly beneath the crusher. The coke-water mixture is allowed to settle, and the water is drained off. Final separation of coke fines from the water is accomplished by special decanters, and the dewatered coke is typically fed from the dewatering bin onto a conveyor. Although this design requires a very tall coke-drum structure, it provides a clean operation that eliminates dependence on the slurry pump and the need for large volumes of recirculated water. Another advantage of the gravity-flow system is that it produces fewer coke fines than the slurry system. Figures 12.2.28 and 12.2.29 provide a schematic and elevation drawing of a totally enclosed gravity-flow dewatering-bin system.

Glossary of Terms

Solids handling requires expertise which traditionally is not part of the refining industry. Table 12.2.10[18] gives a glossary of terms associated with solids handling which should prove useful to those who are normally involved in this area.

USES OF PETROLEUM COKE

Depending on the fundamental type produced and the specific impurity levels present in the final product, petroleum coke is basically used for three types of applications. These applications can be classified as fuel, electrode, and metallurgical. A fourth and

Downloaded from Digital Engineering Library @ McGraw-Hill (www.digitalengineeringlibrary.com)
Copyright © 2004 The McGraw-Hill Companies. All rights reserved.
Any use is subject to the Terms of Use as given at the website.

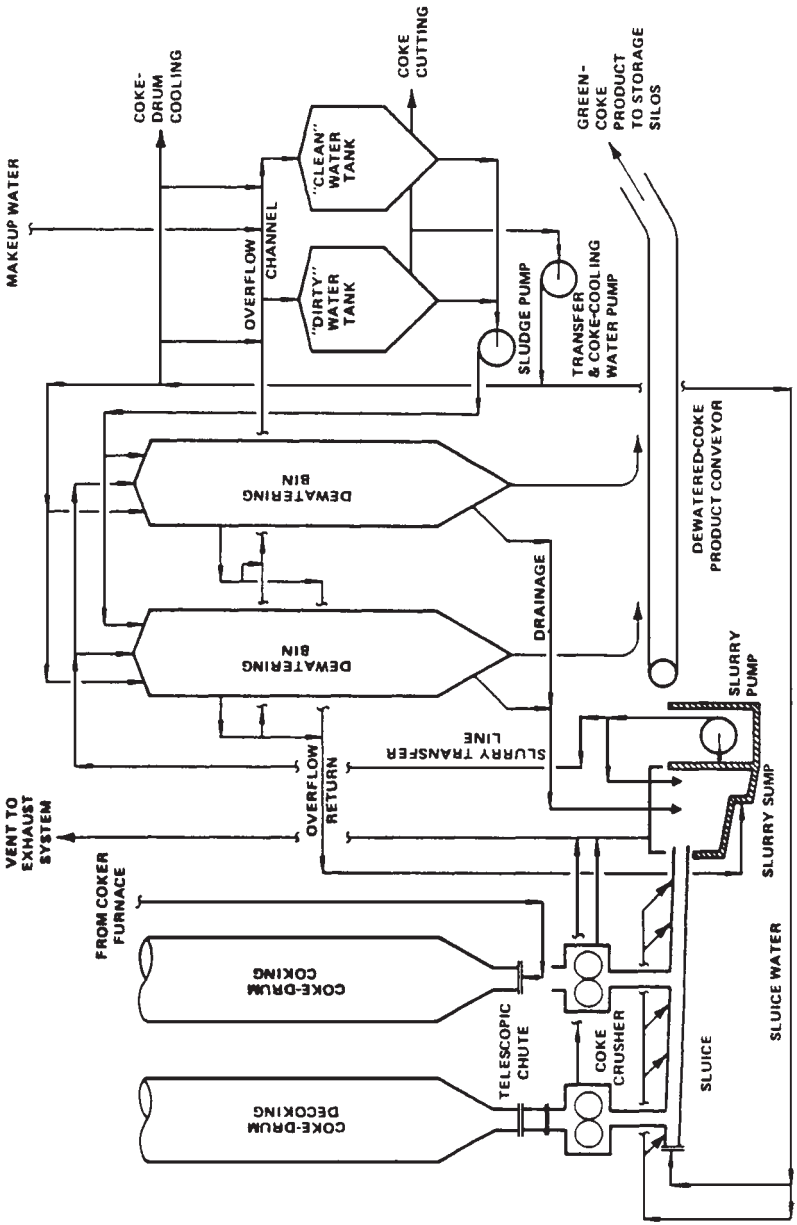

FIGURE 12.2.26 Schematic flow diagram of a totally enclosed slurry dewatering system.

Downloaded from Digital Engineering Library @ McGraw-Hill (www.digitalengineeringlibrary.com)
Copyright © 2004 The McGraw-Hill Companies. All rights reserved.
Any use is subject to the Terms of Use as given at the website.

FW DELAYED-COKING PROCESS

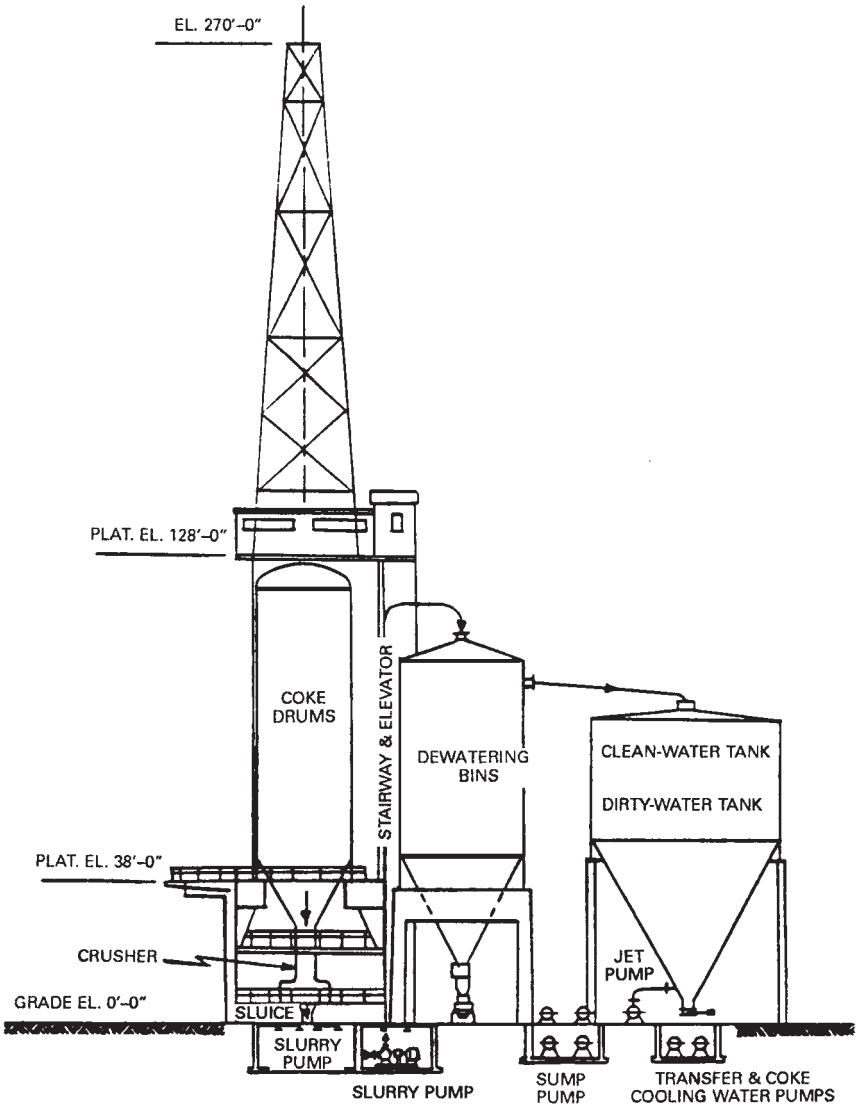

FIGURE 12.2.27 Elevation view of a totally enclosed slurry dewatering system.

Downloaded from Digital Engineering Library @ McGraw-Hill (www.digitalengineeringlibrary.com)
Copyright © 2004 The McGraw-Hill Companies. All rights reserved.
Any use is subject to the Terms of Use as given at the website.

FW DELAYED-COKING PROCESS

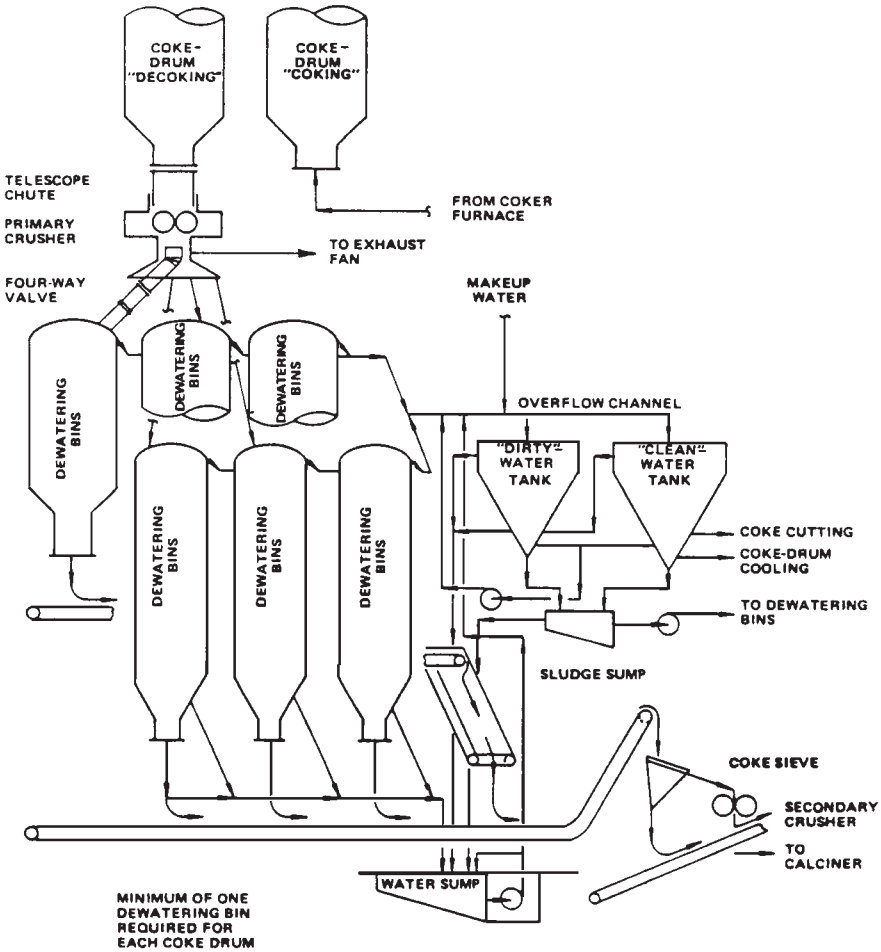

FIGURE 12.2.28 Schematic flow diagram of a gravity-flow dewatering-bin system.

relatively new usage classification, which is gasification, is currently under evaluation by many companies but does not represent a significant application at this time.

Figure 12.2.30 shows how United States coke production was allocated in 1980. Each of the uses is described below.

Types

As described in the section "Feedstocks," sponge coke is the most common type of regular-grade petroleum coke, while needle coke can be made only from special feedstocks. The name *sponge coke* is used because the lumps of coke that are produced are porous and at times resemble spongelike material.[11] Typical sponge-coke specifications both before and after calcination are given in Table 12.2.11.

Downloaded from Digital Engineering Library @ McGraw-Hill (www.digitalengineeringlibrary.com)
Copyright © 2004 The McGraw-Hill Companies. All rights reserved.
Any use is subject to the Terms of Use as given at the website.

FW DELAYED-COKING PROCESS

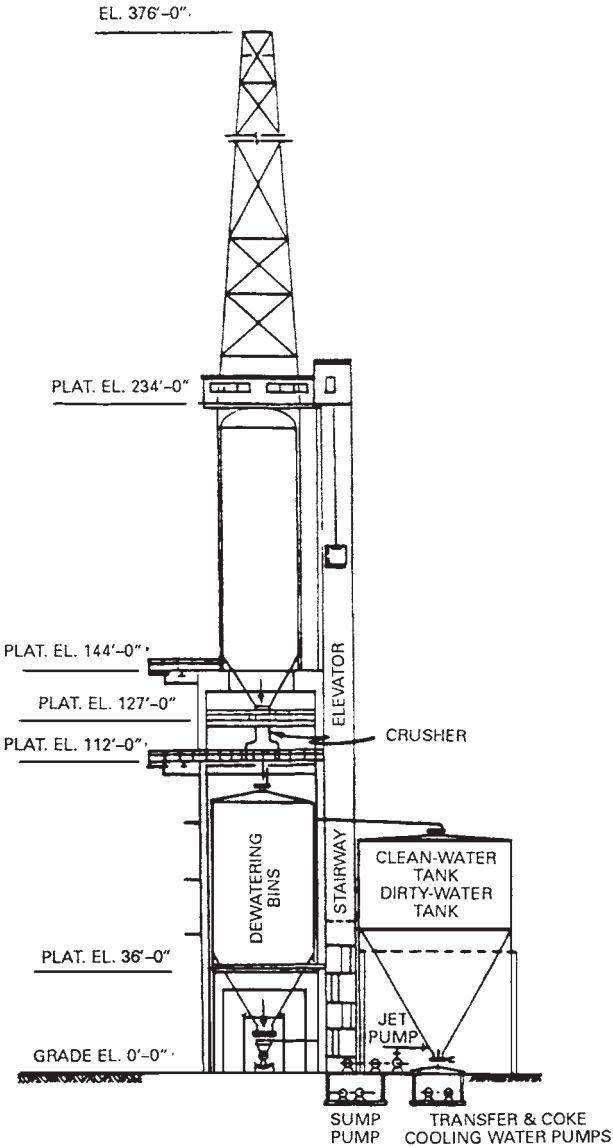

FIGURE 12.2.29 Elevation view of a totally enclosed gravity-flow system.

Downloaded from Digital Engineering Library @ McGraw-Hill (www.digitalengineeringlibrary.com)
Copyright © 2004 The McGraw-Hill Companies. All rights reserved.
Any use is subject to the Terms of Use as given at the website.

FW DELAYED-COKING PROCESS

TABLE 12.2.10 Glossary of Terms

Belt scale	A weighing device on a belt conveyor located under a section of belt carrying material. The scale measures the weight of material on a short length of belt and converts the reading to a unit rate. The scale reading may also give a total weight of material moved during a certain period.
Belt take-up	A mechanical system of pulleys on a belt conveyor used to control excess length of belt and belt tension.
Belt wiper	The edge of an adjustable blade held against a conveyor-belt surface to wipe off any bulk product adhering beyond a normal discharge point.
Boom	A belt conveyor elevated and extended so as to carry bulk product to and from a storage pile or from dock to ship.
Bridge crane	An elevated horizontal beam mounted on a carriage which spans the coke pit across the short dimension. A drive on the beam carriage moves the beam back and forth along the length of the coke pit to give universal positioning for a clamshell-bucket hoist.
Bucket wheel	A circular bulk elevator with multiple scoops. When the wheel turns, the scoops fill at bottom positions and dump at top positions to load bulk product onto reclaim belt conveyors.
Clamshell bucket	A grapple having two vertically hinged jaws used to acquire and lift coke from a pit to a transport or crusher car.
Cleaner plow	An adjustable blade with an edge held against a conveyor-belt surface with its face positioned obliquely to the line of belt travel.
Coke pit	A cavity in the ground adjacent to the delayed-coker vessels used for short-term surge storage of coke. The pit provides a means of draining water from the coke which is used to cut the coke from the coker vessels.
Coker discharge	Bottom opening of a delayed-coker-vessel and the companion chute which diverts coke into the coke pit.
Conveyor belt	An endless strip surface which is supported on rollers and is a means of continuous transporting of bulk material between predetermined points. The surface is flexible and is usually caused to trough by support rollers as a way of limiting spillage.
Crusher	A large machine usually consisting of rolls in juxtaposition. Bulk materials are forced through the space between the rolls so that oversized lumps are broken into smaller size by fracture pressure.
Diverter	A metal surface located across a chute by which the gravity flow of bulk material is caused to go in one direction or another.
Grizzly	A course grid used to separate oversized lumps from acceptable material going to the primary crusher.
Idlers	Multiple small-diameter rollers used to direct and provide an antifriction support for the belt of a belt conveyor.
Metal detector	An electronic device located adjacent to the carrier section of a belt conveyor to sense the presence of magnetic metal debris in the coke being transported.
Metal separator	A magnet system located adjacent to the carrier section of a belt conveyor used to attract and hold magnetic metal debris from the coke on the belt.
Rip detector	A system of electric conductors embedded in the conveyor belt which, if cut or broken as a result of a belt tear, gives an alarm signal or shuts down the affected conveyor.
Stacker	A mobile support frame for belt conveyors which deliver and discharge bulk materials at storage piles.

Downloaded from Digital Engineering Library @ McGraw-Hill (www.digitalengineeringlibrary.com)
Copyright © 2004 The McGraw-Hill Companies. All rights reserved.
Any use is subject to the Terms of Use as given at the website.

FW DELAYED-COKING PROCESS

TABLE 12.2.10 Glossary of Terms (*Continued*)

Stringer	A structural member on each side of a belt conveyor to which idlers, covers, and supports are attached.
Tower	A structural support for transfer chutes and related equipment between conveyors.
Tripper	A set of auxiliary pulleys between the head and tail pulleys of a belt conveyor which fold the belt and cause it to discharge at intermediate locations.

Source: Robert C. Howell and Richard C. Kerr, *Hydrocarb. Process.,* **60**(3), 107 (1981).

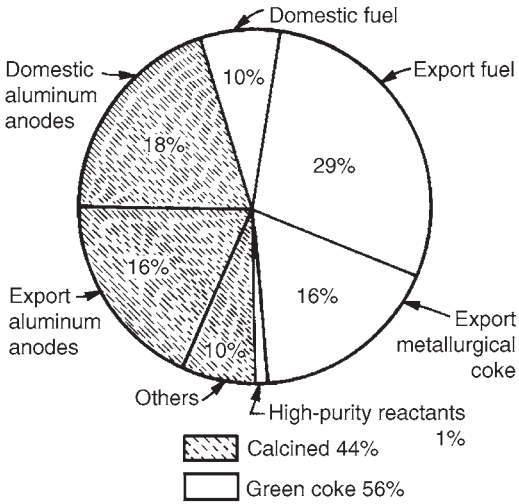

FIGURE 12.2.30 United States petroleum-coke markets in 1980. [*Courtesy of Pennwell Publishing Company, publishers of the* Oil and Gas Journal, ***80,*** *145 (Oct. 25, 1982), 76 (Nov. 1, 1982), and 198 (Nov. 8, 1982), and the Pace Company, which developed the information contained in the figure.*]

Figure 12.2.31 shows that, of the total petroleum coke produced in the United States in 1980, 90 percent (14,320,000 short tons) was conventional delayed coke, while 2 percent (318,000 short tons) was needle coke. The other 8 percent (1,275,000 short tons) was fluid coke produced by a totally different process. Figure 12.2.31 also shows the various ways in which these three types of green coke (uncalcined coke) were used in 1980 for both the green-coke market and the calcined-coke market. It is interesting to note that, unlike liquid petroleum products, of which nearly all are consumed domestically, over 60 percent of the petroleum coke produced by the United States was exported.

So far, we have discussed only the types of coke which are considered to be desirable products. There is, however, another type of coke which is often considered an undesirable product because it may lead to difficulty during the decoking cycle. It is usually produced from very heavy feedstock, especially at low pressure and low recycle ratio. It is known as *shot coke.* Shot coke is spheroid in shape, with sizes that range from as small as buckshot to as large as basketballs.[7] Shot coke may be used as a fuel, but it is less desirable in this usage than is sponge coke.

Downloaded from Digital Engineering Library @ McGraw-Hill (www.digitalengineeringlibrary.com)
Copyright © 2004 The McGraw-Hill Companies. All rights reserved.
Any use is subject to the Terms of Use as given at the website.

FW DELAYED-COKING PROCESS

TABLE 12.2.11 Typical Sponge-Coke Specifications

Item	Green coke	Calcined coke
Moisture	6–14%	0.1%
Volatile matter	8–14%	0.5%
Fixed carbon	86–92%	99.5%
Sulfur	1.0–6.0%	1.0–6.0%
Silicon	0.02%	0.02%
Iron	0.013%	0.02%
Nickel	0.02%	0.03%
Ash	0.25%	0.4%
Vanadium	0.015%	0.03%
Bulk density	45–50 lb/ft^3 (720–800 kg/m^3)	42–45 lb/ft^3 (670–720 kg/m^3)
Real density		2.06 g/cm^3
Grindability (Hardgrove number)		50–100

Use as Fuel

The use of petroleum coke as a fuel generally falls into two major categories, fuel for steam generation and fuel for cement plants. For either of these applications coke is generally blended with bituminous coal or used in combination with oil or gas. In general, coke as a fuel used in combination with bituminous coal has the following advantages over bituminous coal alone:

1. *Grinding.* Coke is easier to grind than bituminous coal, resulting in lower grinding costs and less maintenance.
2. *Heating value.* The heating value of petroleum coke is more than 14,000 Btu/lb, compared with 9000 to 12,500 Btu/lb for coal.
3. *Ash content.* The very low ash content (less than 0.5 wt %) of coke results in lower ash-handling costs.

Steam Generation. Steam generation by coke burning can be accomplished either in specially designed utility boilers or in fluidized-bed boilers.

Utility Boilers. Industry has been firing petroleum coke, typically in combination with other fuels, in large and small boilers for over 50 years. This usage includes includes in-refinery commercial experience producing steam from petroleum coke without supplementary fuel. When used with bituminous coal, coke can be blended within piles, bunkers, burners, or conveyor belts. With the high-sulfur petroleum coke expected from heavier, high-sulfur coker feedstocks, wet flue-gas scrubbing may be required to meet emission requirements for utility boilers.

Fluidized-Bed Boilers. This type of steam generator, which has been developed commercially by Foster Wheeler, allows firing of a wide range of low-cost, low-grade, high-ash, and high-sulfur fuels to produce steam efficiently without any harmful effect to the environment. The fluidized bed is formed by the agitated burning of fuel with limestone. The fluidization medium is combustion air introduced from below the bed. The limestone absorbs the SO_2, and the low combustion temperature inhibits the formation of NO_x. Particulates are removed with a baghouse or, in some cases, by a conventional electrostatic precipitator.

The fluidized-bed boiler lends itself to the combustion of fuels containing vanadium, such as delayed cokes produced from heavy coker feedstocks. Slagging, fouling, and corrosion

Downloaded from Digital Engineering Library @ McGraw-Hill (www.digitalengineeringlibrary.com)
Copyright © 2004 The McGraw-Hill Companies. All rights reserved.
Any use is subject to the Terms of Use as given at the website.

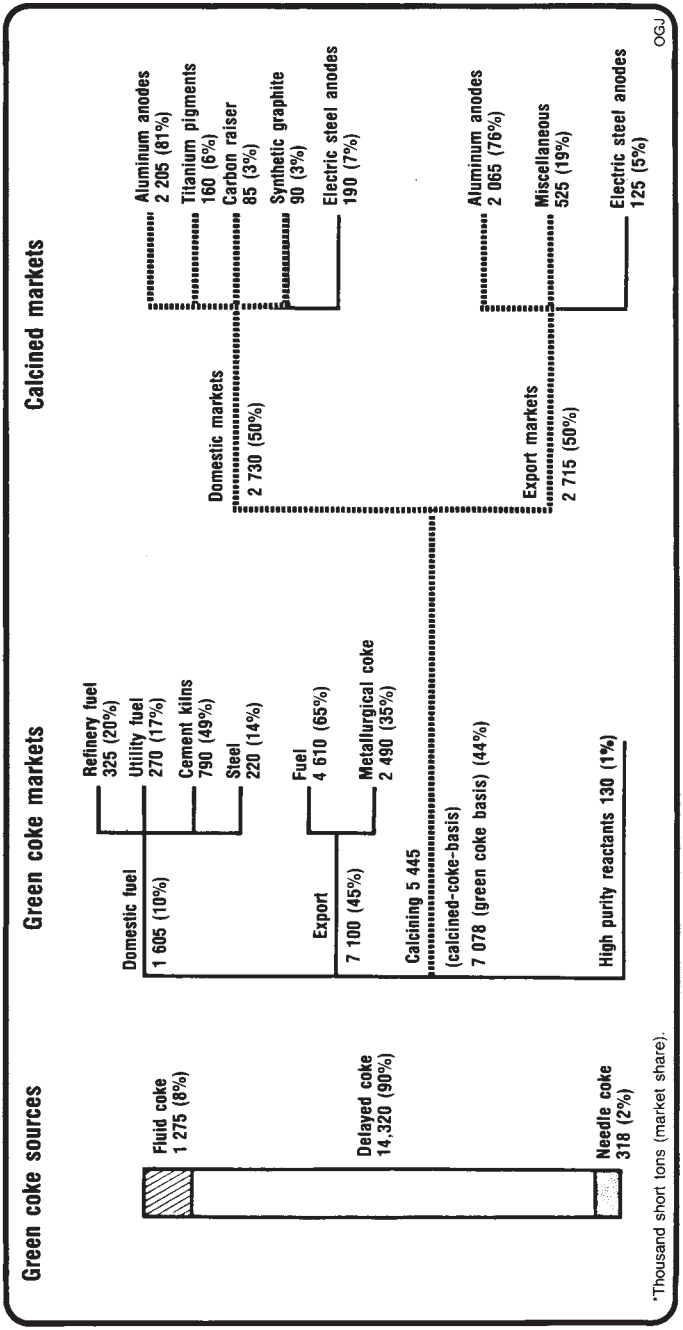

FIGURE 12.2.31 United States petroleum-coke markets in 1980. [*Courtesy of Pennwell Publishing Company, publishers of the* Oil and Gas Journal, ***80***, *145 (Oct. 25, 1982), 76 (Nov. 1, 1982), and 198 (Nov. 8, 1982), and the Pace Company, which developed the information contained in the figure.*]

Downloaded from Digital Engineering Library @ McGraw-Hill (www.digitalengineeringlibrary.com)
Copyright © 2004 The McGraw-Hill Companies. All rights reserved.
Any use is subject to the Terms of Use as given at the website.

FW DELAYED-COKING PROCESS

of steam-generator surfaces are essentially eliminated because the fluidized bed operates at temperatures below the ash-softening point.

Recent evaluations indicate that both for new installations and for revamps fluidized-bed steam generators burning high-sulfur coke, with sulfur capture, can offer a significant advantage both in capital and in operating costs compared with conventional boilers using either high-sulfur coke or oil as a fuel accompanied by wet SO_2-removal systems.[19]

Cement Plants. Coke can be used with coal, natural gas, refinery fuel gas, or oil as a supplementary fuel in fired kilns. Coke by itself does not contain enough volatile material to produce a self-sustaining flame, and as a result it cannot be fired alone in cement kilns. Typical fuel combinations for cement plants are 25 percent oil or gas and 75 percent coke or 70 percent bituminous coal and 30 percent coke.

The sulfur contained in the coke reacts with the cement to form sulfate, which reduces the requirements for calcium sulfate (gypsum) in the cement. Metals (V and Ni) from the coke are not detrimental to the cement. On the basis of a 25 percent oil and 75 percent coke fuel combination, coke consumption for a modern cement plant will be 75 to 115 tons/1000 tons of cement.

Use for Electrodes

Low-sulfur, low-metals sponge coke, after calcination, can be used to manufacture anodes for the aluminum industry. The aluminum industry is the greatest single consumer of coke.[11] Figure 12.2.30 shows the combined domestic and export total as 34 percent in 1980. For every pound of aluminum produced by smelting, nearly ½ lb of calcined coke is consumed. Figure 12.2.32 shows aluminum anodes arranged in a reduction cell for the smelting of aluminum (on the left) and formed in hydraulic presses (on the right). Figure 12.2.33 shows aluminum anodes in storage.

Needle coke is a highly ordered petroleum coke produced from special low-sulfur aromatic feedstocks. The main use of calcined needle coke is in the manufacture of graphite electrodes for electric-arc furnaces in the steel industry. Since these electrodes are subject to extremes in temperature shock, a low coefficient of thermal expansion is very important.[15] Typical properties of needle coke, used for graphite-electrode manufacture, both before and after calcination, are given in Table 12.2.12.

Metallurgical Use

Petroleum coke with a low sulfur content (2.5 wt % or less) can be used in ferrous metallurgy when blended with low-volatility coking coals. Petroleum coke used in foundries or for steel making enhances the properties of coking coals by reducing the total amount of volatiles and increasing the average heating value.

Metal content in the coke does not normally present a problem in the metallurgical industry.

Use for Gasification

The use of delayed coke as gasification feed is currently under investigation by many companies. Gasification to low-Btu gas or syngas can be accomplished through the use of partial-oxidation techniques. Low-Btu gas can be used as a fuel gas in the refinery; syngas can be used for the production of methanol for automotive fuel blending or as a feedstock for other chemical processes. Partial oxidation can also be used to produce

Downloaded from Digital Engineering Library @ McGraw-Hill (www.digitalengineeringlibrary.com)
Copyright © 2004 The McGraw-Hill Companies. All rights reserved.
Any use is subject to the Terms of Use as given at the website.

FW DELAYED-COKING PROCESS

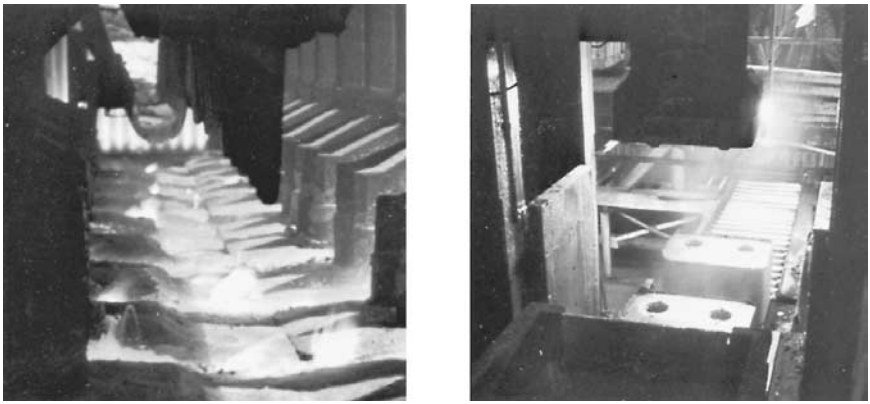

FIGURE 12.2.32 Aluminum electrodes: formation and utilization. (*Courtesy of Noranda Aluminum Inc.*)

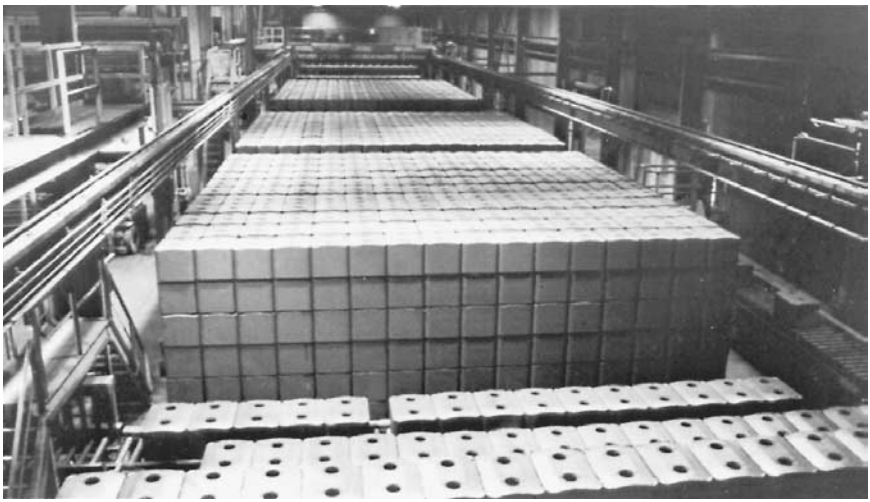

FIGURE 12.2.33 Aluminum electrodes in storage. (*Courtesy of Noranda Aluminum Inc.*)

the increased hydrogen necessary to refine heavy or higher-sulfur crudes into commercial products. The amount of low-Btu gas that can be handled in existing refineries may be limited by existing equipment. However, in new grass-roots refineries a large part of fuel needs can be satisfied by gasification.

Coke Prices

Past and current prices for various types of petroleum coke are shown in Fig. 12.2.34. The sulfur levels for each of these types of coke are defined in Table 12.2.13. We can see that while coke is generally not produced for its own market value but rather for

Downloaded from Digital Engineering Library @ McGraw-Hill (www.digitalengineeringlibrary.com)
Copyright © 2004 The McGraw-Hill Companies. All rights reserved.
Any use is subject to the Terms of Use as given at the website.

FW DELAYED-COKING PROCESS

TABLE 12.2.12 Typical Needle-Coke Specifications

Item	Green coke	Calcined coke
Moisture	6–14%	0.1%
Volatile matter	4–7%	0.5%
Sulfur	0.5–1.0%	0.5–1.0%
Silicon	0.02%	0.02%
Iron	0.013%	0.02%
Nickel	0.02%	0.03%
Ash	0.25%	0.4%
Vanadium	0.01%	0.02%
Bulk density	45–50 lb/ft^3 (720–800 kg/m^3)	42–45 lb/ft^3 (670–720 kg/m^3)
Real density		2.11 g/cm^3
Coefficient of thermal expansion (25–130°C), 1/°C		5×10^{-7}

that of the resulting liquid products, a reasonable market value nevertheless does exist and is predicted[11] to continue. This is the case even though in years to come the quality of most of the available coke will undoubtedly continue to worsen in terms of sulfur level and metal impurities.

INTEGRATION OF DELAYED COKING IN MODERN REFINERIES

One of the basic problems that refiners face is how to select from among the available bottom-of-the-barrel conversion processes the best residual-processing route to meet the needs of their own particular set of refining objectives.[13] Such a decision can be made only after a detailed analysis of the various alternatives. How delayed coking fits in, as one of the available alternatives, is discussed below.

Bottom-of-the-Barrel Processing

Although process developments do continue, the questions which refiners face in deciding on a specific residual-conversion-processing route are mainly ones of application rather than ones of development. Therefore, one of the basic problems is to provide a processing route which makes optimal use of the available bottom-of-the-barrel residual-conversion processes.[19] These bottom-of-the-barrel processes can be classified into five groups, as follows:[13]

1. Separation processes
   Vacuum distillation
   Solvent deasphalting
2. Carbon-rejection processes: Thermal processing
   Visbreaking
   Delayed coking
   Fluid coking and flexicoking

Downloaded from Digital Engineering Library @ McGraw-Hill (www.digitalengineeringlibrary.com)
Copyright © 2004 The McGraw-Hill Companies. All rights reserved.
Any use is subject to the Terms of Use as given at the website.

FW DELAYED-COKING PROCESS

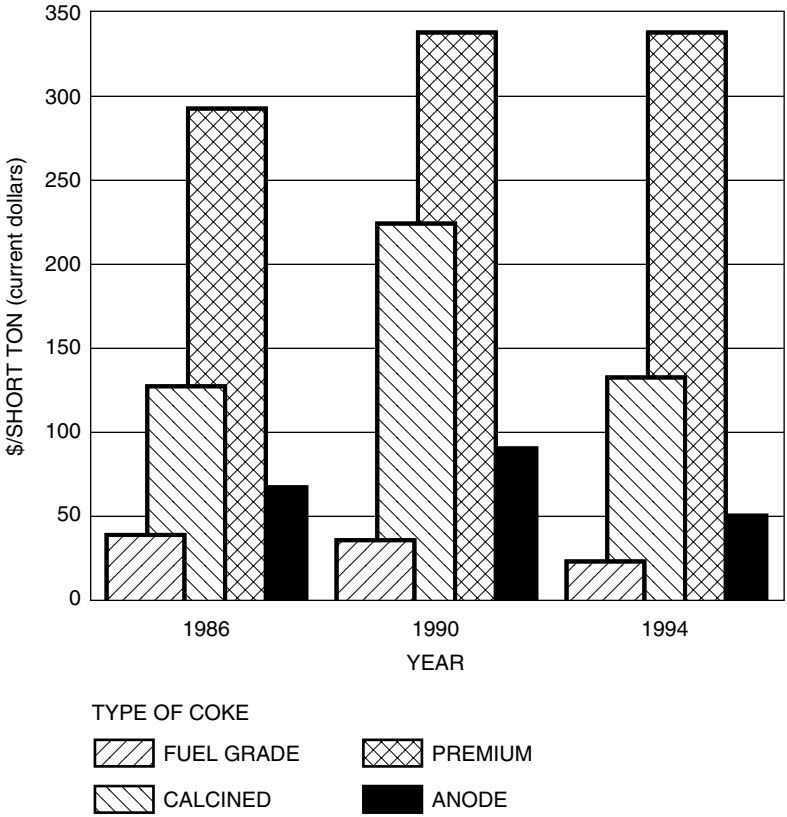

FIGURE 12.2.34 U.S. petroleum coke prices. [Average price per short ton (dry), FOB Gulf Coast.] (*Courtesy of the Pace Company, which developed the data shown.*)

TABLE 12.2.13 Coke Type versus Sulfur Level

Coke type	Sulfur level, wt %
Fuel grade*	4+
Premium grade*	Below 2
Anode grade*	2–3
Calcined coke	2–3

*Green coke.
Source: W. L. Nelson, *Oil Gas J.,* **74,** 60 (May 24, 1976).

Downloaded from Digital Engineering Library @ McGraw-Hill (www.digitalengineeringlibrary.com)
Copyright © 2004 The McGraw-Hill Companies. All rights reserved.
Any use is subject to the Terms of Use as given at the website.

FW DELAYED-COKING PROCESS

Combination visbreaking and thermal cracking

3. Catalytic conversion: Residue catalytic cracking
4. Hydrogen-addition processes: Residue hydrocracking
5. Combined carbon rejection–hydrogen addition: Thermal–hydrocracking

In these classifications we see that delayed coking is listed as a carbon-rejection thermal process.

Residual-conversion-processing routes should be specially tailored for each refinery depending on considerations including:

- Properties of the crude oils to be processed
- Marketing requirements
- Economics, including operating costs
- Grass roots versus expansion
- Environmental control requirements

Typically, optimization studies using linear programming techniques are utilized during the investigatory phase prior to deciding on a residual-conversion route. If there is one maxim inherent in the analysis of residual-conversion routes it is "There are no generalities."

We mentioned at the beginning of the chapter that delayed coking has been referred to as the yardstick against which other processes must be measured. If we refer to Table 12.2.14,[20] we can get a better appreciation of how delayed coking may be compared with various other available bottom-of-the-barrel processing alternatives simply in terms of investment. Table 12.2.14 is for a specific study on light Arabian crude, which was prepared by the UOP Process Division.[20]

Information similar to that of Table 12.2.14, but this time also showing product yields, is presented in Fig. 12.2.35. From Table 12.2.14 and Fig. 12.2.35 we can conclude that delayed coking has one of the lowest investments of the various alternatives and that the investment increases as the schemes become more complicated in order to yield more liquid products. Although this cost information is somewhat dated, the relative trend should still be correct. Whether or not an additional investment is justified will depend on the specific set of conditions prevailing for the particular refinery in question.

Typical Refinery Schemes Utilizing Delayed Coking

We have shown in a simplified manner, in the section "Feedstocks," how the overall yield from delayed coking may be enhanced if it is employed in conjunction with residue desulfurization. To develop this topic further and to show how delayed coking can be integrated in various possible ways within the structure of a refinery, we refer to the following case study.[19]

Consider a grassroots refinery processing 100,000 BPSD of Alaskan North Slope crude to produce transportation fuels. Additional considerations include:

- Gasoline pool: 40 percent premium unleaded, 40 percent regular unleaded, 20 percent regular leaded
- Refinery fuel oil: 0.5 wt % sulfur maximum
- Consistent approach to the processing of light ends and catalytic re-forming of straight-run naphtha and thermal naphthas for all cases

Downloaded from Digital Engineering Library @ McGraw-Hill (www.digitalengineeringlibrary.com)
Copyright © 2004 The McGraw-Hill Companies. All rights reserved.
Any use is subject to the Terms of Use as given at the website.

FW DELAYED-COKING PROCESS

TABLE 12.2.14 Upgrading-Scheme Cost Summary: Estimated Erected Costs, First Quarter, 1981

Vacuum fractionators	RCD Unibon	BOC unit	Vacuum fractionator	Demex	Visbreaker	Coking	Total, $ million	Total $/bbl*
X							14.5	346
	X		X				99.5	2278
	X		X	X			109.1	2602
	X		X			X	115.7	2760
X		X	X				72.3	1725
X		X	X	X			82.0	1956
X		X	X		X		80.8	1927
X				X			27.8	663
X			X		X		30.6	730
X						X	41.2	983

*Basis: 41,925 bbl/calendar day of reduced crude.

Source: Courtesy of Pennwell Publishing Company, publishers of the *Oil and Gas Journal* [John G. Sikonia, Frank Stolfa, and LeRoi E. Hutchings, *Oil Gas J.,* **79,** 258 (Oct. 19, 1981)] and UOP Process Division, which developed the information contained in the table. Demex, BOC Unibon, and RCD Unibon are registered trademarks and/or service marks of UOP. X = units included in flow scheme.

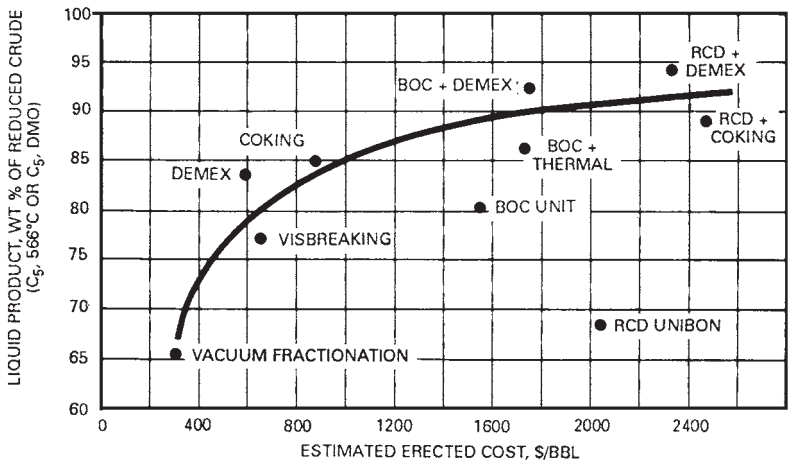

FIGURE 12.2.35 Liquid product versus estimated cost for various residue-processing schemes. Estimated costs are for the first quarter of 1981. Demex, BOC Unibon, and RCD Unibon are registered trademarks and/or service marks of UOP Inc. [*Courtesy of Pennwell Publishing Company, publishers of the* Oil and Gas Journal, **79**, *258 (Oct. 19, 1981), and UOP Process Division, which developed the information contained in the figure.*]

Downloaded from Digital Engineering Library @ McGraw-Hill (www.digitalengineeringlibrary.com)
Copyright © 2004 The McGraw-Hill Companies. All rights reserved.
Any use is subject to the Terms of Use as given at the website.

FW DELAYED-COKING PROCESS

- Isobutane requirements for alkylation to be met without requiring any outside purchase
- All refinery fuel requirements to be met internally

The base case and two alternative conversion routes for processing a typical North Slope atmospheric residue may be simply described as follows:

Designation	Description
Base case	Vacuum flashing, vacuum gas oil desulfurizing, fluid catalytic cracking
Alternative A	Vacuum flashing, delayed coking, desulfurization of vacuum gas oil and coker gas oil, fluid catalytic cracking
Alternative B	Residue desulfurization, vacuum flashing, delayed coking, fluid catalytic cracking

Simplified block flow diagrams (Figs. 12.2.36, 12.2.37, and 12.2.38) for the base refinery and the two alternative conversion refineries indicate the net product yields from each. The net product yields are given in metric tons per calendar day and, when appropriate, in barrels per calendar day (BPCD). To simplify this presentation, some of the required process units such as LPG and naphtha treaters, amine regenerator, sulfur recovery, and tail-gas-treating unit are not shown on the diagrams. However, the investment costs, operating requirements, and effect on product yields and qualities of these units, as well as the support facilities required, have been taken into consideration throughout.

Base Refinery. The processing route for the base refinery (Fig. 12.2.36) uses a conventional-crude-vacuum-flasher scheme coupled with vacuum gas oil (VGO) desulfurization followed by fluid catalytic cracking (FCC). Straight-run naphtha is catalytically re-formed to improve octane, straight-run middle distillates are desulfurized, and kerosene is hydrotreated to reduce aromatic and naphthalene contents in order to meet Jet A fuel specifications. Olefinic light ends from the FCC are polymerized and also alkylated with internally produced isobutane to produce gasoline blend stocks. In addition to improving FCC product yields, the use of FCC feed desulfurization results in lower sulfur emissions from the FCC regenerator, as well as allowing the FCC decant oil to be used as a low-sulfur refinery fuel oil.

The base refinery does not provide any residual-conversion capability. It should be pointed out that it is not always necessary to provide residual conversion. Depending on crude type, product specifications, and available markets, the refiner may be able to justify no or low residual-conversion rates through the projected sale of residual fuel or asphalts.

Alternative A. The first type of residual-conversion refinery (Fig. 12.2.37) utilizes essentially the same route as the base refinery with a delayed coker converting the vacuum residue to cracked distillates and green coke. Coker gas oil is desulfurized with the VGO before being fed to the FCC unit.

Alternative A is a basic residual-conversion route which is frequently utilized for refinery expansions. The residual-conversion capability of a base refinery is achieved by adding a delayed coker while increasing the capacity of existing downstream units. This route is suitable for processing high-sulfur, high-metal crudes. However, when such is the case, the coke produced usually is not suitable for aluminum anodes and must instead be used for fuel.

The sulfur emissions for alternate A are slightly lower than those of the base case.

Alternative B. Alternative B (Fig. 12.2.38) is presented as a case in which it may be advantageous to produce low-sulfur, green sponge coke for special market requirements. This conversion route utilizes a reduced-crude desulfurizer followed by

Downloaded from Digital Engineering Library @ McGraw-Hill (www.digitalengineeringlibrary.com)
Copyright © 2004 The McGraw-Hill Companies. All rights reserved.
Any use is subject to the Terms of Use as given at the website.

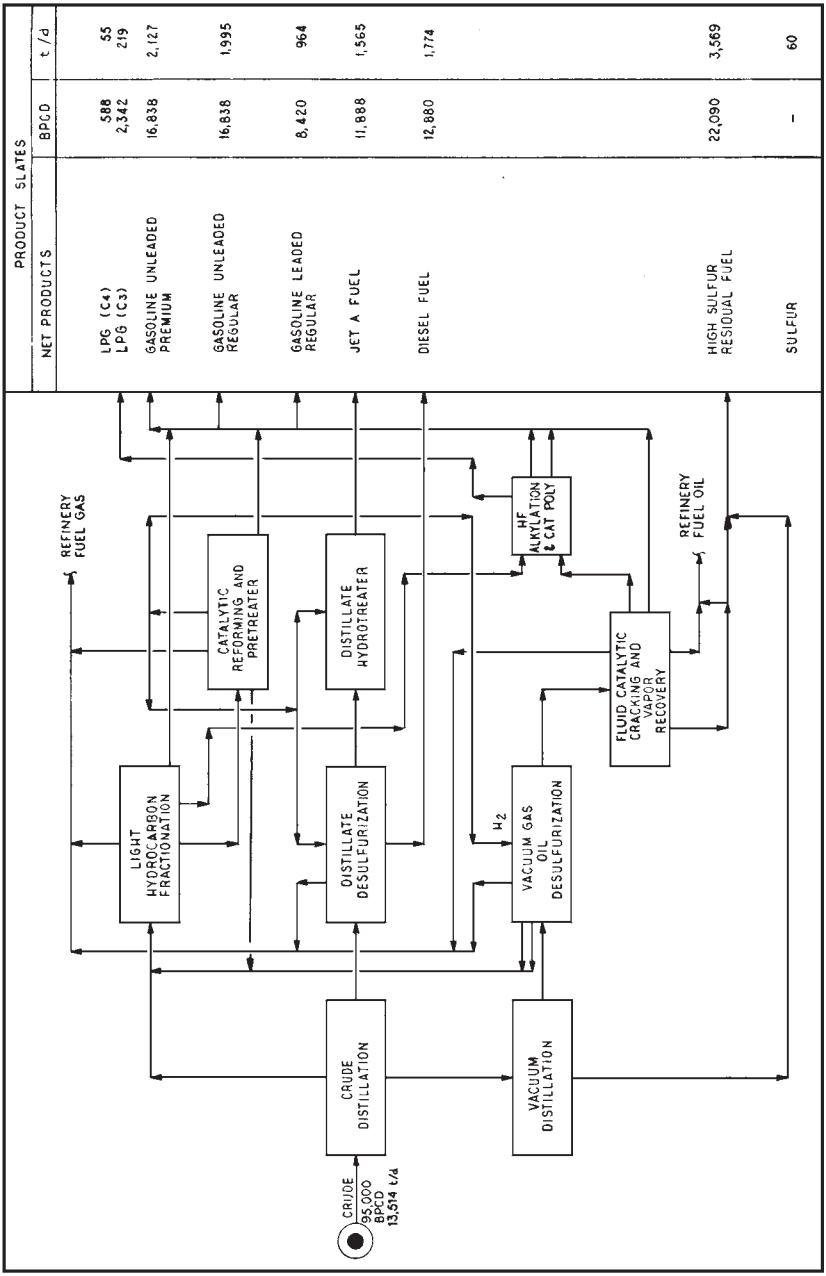

FIGURE 12.2.36 Base refinery configuration. (*R. DeBiase, J. D. Elliott, D. I. Ichiman, and M. J. McGrath, "Alternate Conversion Schemes for Residual Feedstocks," AIChE Meeting, Houston, April 1981.*)

Downloaded from Digital Engineering Library @ McGraw-Hill (www.digitalengineeringlibrary.com)
Copyright © 2004 The McGraw-Hill Companies. All rights reserved.
Any use is subject to the Terms of Use as given at the website.

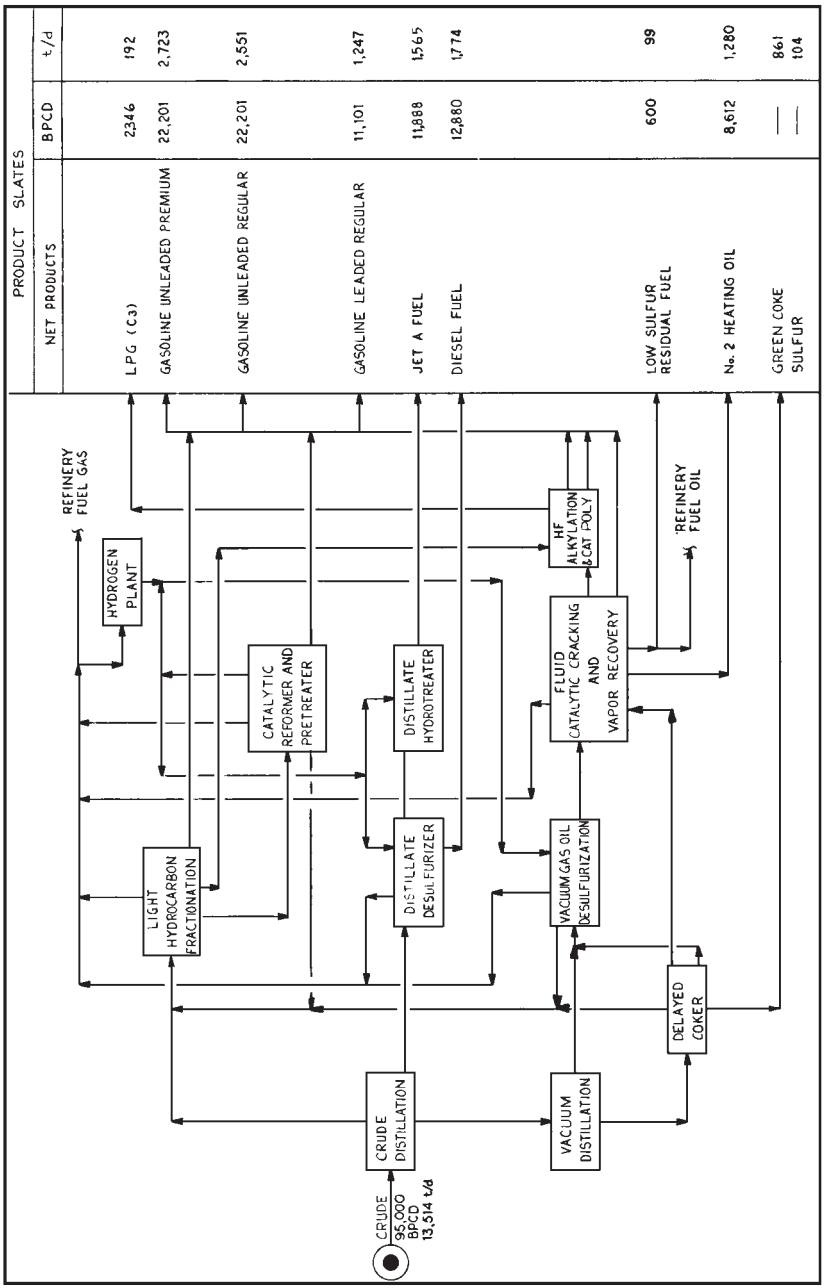

FIGURE 12.2.37 Configuration for alternative A. (*R. DeBiase, J. D. Elliott, D. I. Ichiman, and J. J. McGrath, "Alternate Conversion Schemes for Residual Feedstocks," AIChE Meeting, Houston, April 1981.*)

Downloaded from Digital Engineering Library @ McGraw-Hill (www.digitalengineeringlibrary.com)
Copyright © 2004 The McGraw-Hill Companies. All rights reserved.
Any use is subject to the Terms of Use as given at the website.

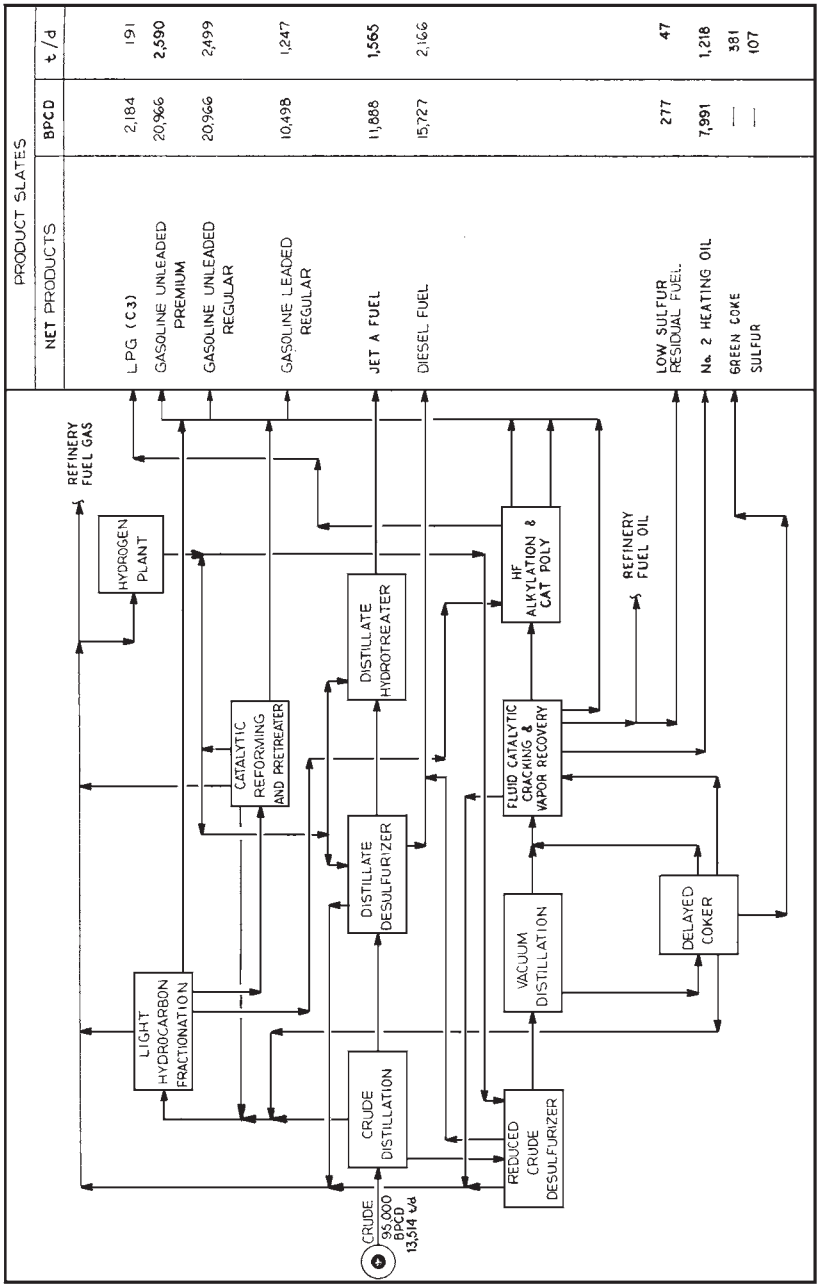

FIGURE 12.2.38 Configuration for alternative B. (*R. DeBiase, J. D. Elliott, D. I. Izhiman, and J. J. McGrath, "Alternate Conversion Schemes for Residual Feedstocks," AIChE Meeting, Houston, April 1981.*)

Downloaded from Digital Engineering Library @ McGraw-Hill (www.digitalengineeringlibrary.com)
Copyright © 2004 The McGraw-Hill Companies. All rights reserved.
Any use is subject to the Terms of Use as given at the website.

FW DELAYED-COKING PROCESS

a vacuum flasher to produce delayed-coker feedstock. The low-sulfur vacuum and coker gas oils are fed to a conventional gas-oil FCC unit. A small amount of net residual fuel oil is produced from FCC cycle and decant oils.

The use of a residue desulfurizer upstream of a delayed coker improves ultimate coke quality by reducing sulfur and metals in the coker feed. The low-sulfur coker gas oil which is produced via this processing scheme will give better FCC yields than untreated coker gas oils from straight-run residues. Because the residue desulfurizer reduces the carbon-residue content of the coker feedstock, the yield of coke from the delayed coker is much less than it would be with untreated reduced crude as the feed. The vacuum unit downstream of the residue desulfurizer further reduces the quantity of low-sulfur coke which is produced.

Comparisons of Base Case and Alternatives. Total refinery investment requirements are indicated for the base case and each of the two alternatives in Table 12.2.15. These investment costs are conceptual-curve-type costs for the fourth quarter of 2002 United States Gulf Coast grassroots construction. They do not include working capital, inventories, start-up expense, and royalties and exclude the cost of land, site preparation, taxes, licenses, permits, and duties.

Incremental operating requirements over those necessary for the base refinery are given for each of the two alternate residual-conversion refineries in Table 12.2.16. In developing utility requirements, it has been assumed that electric power will be purchased. All fuel requirements have been met internally. This is reflected in the net-product slates given on each of the simplified block flow diagrams.

No conclusions can be reached as to which of three cases presented above is best, since any such conclusion must necessarily depend on the specific set of economic conditions for the refinery under study.

TYPICAL UTILITY REQUIREMENTS

The total utility requirements for any delayed coker may be considered as consisting of two separate parts. One part is the continuous requirement, and the second part is the intermittent requirement. Typical values for each part are given below.

Continuous Utilities

Summarized below are typical continuous utility requirements for a delayed coker. In order to facilitate preliminary evaluations, values are given for the type of unit shown in Fig. 12.2.4 and are listed on the basis of 1000 BPSD of fresh feed or, in the case of raw water, for each short ton per day of green coke produced. Actual utilities will vary from the typical numbers shown below on the basis of individual heat- and material-balance calculations and specific requirements for downstream processing.

TABLE 12.2.15 Investment Summary, US$1000*

	Base refinery	Alternative A	Alternative B
Process units	442,000	566,000	638,000
Support facilities	264,000	343,000	382,000
Total delivered and erected investment	706,000	909,000	1,021,000

*Basis: Fourth quarter, 2002, United States Gulf Coast.

Downloaded from Digital Engineering Library @ McGraw-Hill (www.digitalengineeringlibrary.com)
Copyright © 2004 The McGraw-Hill Companies. All rights reserved.
Any use is subject to the Terms of Use as given at the website.

FW DELAYED-COKING PROCESS

TABLE 12.2.16 Incremental Operating Requirements over Base Refinery

	Alternative A	Alternative B
Purchased electric power, kWh/h	2,900	27,500
Catalyst and chemicals, $/day*	1,600	11,300
Operating personnel	18	20

*Does not include product-blending chemicals such as tetraethyl lead.

Fuel liberated	5,100,000 Btu/(h · 1000 BPSD)
Power consumed	150 kW/1000 BPSD
Steam exported	1700 lb/(h · 1000 BPSD)
Boiler feedwater consumed	2400 lb/(h · 1000 BPSD)
Cooling water, $\Delta t = 14°C$	5–25 gal/(min · 1000 BPSD)*
Raw water consumed	20–35 gal/day per short ton/day coke

*Based on maximum use of air cooling.

Intermittent Utilities

Intermittent utilities are required for the decoking and coke-drum blowdown systems. The utility consumptions given are typical for delayed cokers having coke-drum diameters of 20 ft or greater. The time required for the utilities is typical for a two-drum delayed coker operating under a 24-h coking cycle. Actual utilities will vary with coke production and drum size.

All intermittent utility requirements are consumptions.

Power consumed	h/day	kW
Jet pump	5	2000
Blowdown circulating-oil cooler	8	45
Blowdown condenser	5	207
Coke-drum condensate pump	5	6
Slop-oil pump	6	8
Coke-drum cooling-water pump	6	69
Clear-water pump	4	19
Vent-gas compressor	5	100 average
Overhead bucket crane	7	200
Elevator	...	10
Lights and instruments	...	25
Steam consumed	**h/day**	**lb/h**
Coke-drum steam-out to fractionator	1	10,000
Coke-drum steam-out to blowdown drum	1	20,000
Coker blowdown drum	8	750
Blowdown circulating-oil cooler	8	2,000
Cooling-water required	**h/day**	**gal/min**
Jet pump	5	25
Plant air consumed	**h/day**	**SCF/min**
Hoist	5	600
Rotary motor	5	200

Downloaded from Digital Engineering Library @ McGraw-Hill (www.digitalengineeringlibrary.com)
Copyright © 2004 The McGraw-Hill Companies. All rights reserved.
Any use is subject to the Terms of Use as given at the website.

FW DELAYED-COKING PROCESS

Energy-Conservation Measures

The trend toward increased energy efficiency to reduce utility consumption has affected the design of delayed cokers in much the same way as it has other conventional refinery process units. A review of the methods used in achieving this increased efficiency follows.

Coker-Furnace Air Preheat. The refining industry is moving more and more in the direction of air preheat for process furnaces. Coker furnaces are no exception. Traditionally, delayed cokers have had high furnace inlet temperatures, in excess of 260°C, and have had to rely on the generation of steam to improve fuel efficiency. Preheating of relatively cold boiler-feedwater makeup together with steam generation has not usually proved to be a viable economic alternative to air preheat. Air preheat not only provides fuel efficiencies as high as 92 percent, compared to typical steam-generation efficiencies of 87 percent, but requires less fuel. This is true because it does not achieve its efficiency by increasing the absorbed heat, which would be necessary to generate steam.

Many of the new coker projects include air preheat to improve heater efficiency.

Increased Recovery of Fractionator Heat. Traditionally, the top section of the coker fractionator, above the light gas oil draw-off, was considered to be too cold for the economic recovery of heat. However, this type of conventional design must be evaluated when there is a greater economic incentive for the recovery of low-level heat.

Several recent designs have recovered heat from the fractionator by using a light gas oil pumparound. Heat from this pumparound may be used to generate low-pressure steam, to preheat cold process streams, and to reboil low-temperature vapor-recovery-unit towers.

Conventional recovery of very low level heat may also be accomplished through the use of a hot-water circulating system tied into a central refinery circulating-hot-water belt system. A portion of the heat recovered could be used for tempering cold fresh air to the furnace preheater.

ESTIMATED INVESTMENT COST

For certain processing units, it is possible to develop a rough estimate of investment cost simply from the feed capacity of the unit. For delayed cokers this is not practicable because one must also know the amount of coke that is produced from the particular feedstock in question. For this reason, it is better to cross-correlate the investment cost of delayed cokers with a parameter such as tons per day of product coke as well as barrels per day of feed.

Although a highly accurate investment cost for a delayed coker can be determined only by a detailed definitive estimate, it is often necessary when carrying out economic evaluations to develop a rough, preliminary budget-type estimate. This type of estimate typically has an accuracy of ±30 percent. For a delayed coker a cost in the range $45,000 to $95,000/(short ton-day) of coke produced may be used for preliminary evaluations. This cost excludes the vapor-recovery unit and is based on the following assumptions.

General

United States Gulf Coast location.

Time basis of fourth quarter 2002, with costs reflecting no future escalation.

Coke produced is sponge coke.

Coke handling is via a pit with an overhead crane.

Calcining is not included.

Clear and level site conditions free of above- and below-ground obstructions; 3000

Downloaded from Digital Engineering Library @ McGraw-Hill (www.digitalengineeringlibrary.com)
Copyright © 2004 The McGraw-Hill Companies. All rights reserved.
Any use is subject to the Terms of Use as given at the website.

FW DELAYED-COKING PROCESS

to 4000 lb/ft^2 soil bearing at 4 ft below grade.
Normal engineering design standards and specifications.
Vapor-recovery unit is not included.

Exclusions

Cost of land.
Taxes and owner's insurances.
Licenses, permits, and duties.
Spare parts.
Catalysts and chemicals.
Process royalties and fees (normally none for delayed cokers).
Startup costs.
Interest.
Forward escalation.
Support facilities

ABBREVIATIONS

Abbreviations used in this chapter are listed in Table 12.2.17.

REFERENCES

1. *Oil Gas J.,* **79,** 43 (Jan. 5, 1981).
2. W. J. Rossi, B. S. Deighton, and A. J. MacDonald, *Hydrocarb. Process.,* **56**(5), 105 (1977).
3. S. B. Heck, Jr., "Process Design of a Modern Delayed Coker," American Petroleum Institute Midyear Meeting, New York, May 1972.

TABLE 12.2.17 Abbreviations

°API	Degrees on American Petroleum Institute scale; °API = (141.5/sp gr) − 131.5	FI	Flow indicator
ASTM	American Society for Testing and Materials	HC	Hand controller
BOC Unibon	Black-oil conversion Unibon	HDS	Hydrodesulfurization
BPCD	Barrels per calendar day	HF	Hydrofluoric acid
BPSD	Barrels per stream day	LC	Level controller
°C	Degrees Celsius	LI	Level indicator
CCR	Conradson carbon residue (defined in subsection "Regular-Grade Coke Production")	LPG	Liquefied petroleum gas
CW	Cooling water	M	Motor
DMO	Demetallized oil	Ni	Nickel
FC	Flow controller	PC	Pressure controller
FCC	Fluid catalytic cracker	RCD Unibon	Reduced-crude desulfurization Unibon
		TBP	True boiling point
		TEL	Tetraethyl lead
		V	Vanadium
		VCM	Volatile combustible material
		WH	Waste heat

Downloaded from Digital Engineering Library @ McGraw-Hill (www.digitalengineeringlibrary.com)
Copyright © 2004 The McGraw-Hill Companies. All rights reserved.
Any use is subject to the Terms of Use as given at the website.

FW DELAYED-COKING PROCESS

4. *Oil Gas J.,* **75,** 340 (August 1977).
5. James H. Gary and Glenn E. Handwerk, *Petroleum Refining: Technology of Petroleum,* Marcel Dekker, New York, 1975.
6. Frank Stolfa, *Hydrocarb. Process.,* **59**(5), 101 (1980).
7. R. DeBiase and J. D. Elliott, "Recent Trends in Delayed Coking," NPRA Annual Meeting, San Antonio, March 1982.
8. *Oil Gas J.,* **92,** 51, 53 (Dec. 19, 1994).
9. *Oil Gas J.,* **80,** 81, 130 (Mar. 22, 1982).
10. W. L. Nelson, *Oil Gas J.,* **74,** 60 (May 24, 1976).
11. Peter Fasullo, John Matson, and Tim Tarrillion, *Oil Gas J.,* **80,** 145 (Oct. 25, 1982), 76 (Nov. 1, 1982), 198 (Nov. 8, 1982).
12. William F. Bland and Robert L. Davidson, *Petroleum Processing Handbook,* McGraw-Hill, New York, 1967.
13. J. A. Bonilla, "Delayed Coking and Solvent Deasphalting: Options for Residue Upgrading," AIChE Meeting, Anaheim, Calif., June 1982.
14. D. H. Stormont, *Oil Gas J.,* **67,** 75 (Mar. 17, 1969).
15. Barend Alberts and Dick P. Zwartbol, *Oil Gas J.,* **77,** 137 (June 4, 1979).
16. Virgil B. Guthrie, *Petroleum Products Handbook,* McGraw-Hill, New York, 1960.
17. W. L. Nelson, *Petroleum Refining Engineering,* 4th ed., McGraw-Hill, New York, 1958.
18. Robert C. Howell and Richard C. Kerr, *Hydrocarb. Process.,* **60**(3), 107 (1981).
19. R. DeBiase, J. D. Elliott, D. I. Izhiman, and M. J. McGrath, "Alternate Conversion Schemes for Residual Feedstocks," AIChE Meeting, Houston, April 1981.
20. John G. Sikonia, Frank Stolfa, and LeRoi E. Hutchings, *Oil Gas J.,* **79,** 258 (Oct. 19, 1981).

BIBLIOGRAPHY

DeBiase, R., and J. D. Elliott: *Heat Eng.,* 53 (October–December 1981).

——— *Oil Gas J.,* **80,** 81 (Apr. 19, 1982).

———: *Hydrocarb. Process.,* **61**(5), 9 (1982).

Heat. Eng., 46 (May–June 1967).

Heat. Eng., 12 (January–March 1979).

Hydrocarb. Process., **61**(9), 162 (1982).

Kirk-Othmer Encyclopedia of Chemical Technology, 3d ed., vol. 4, Wiley, New York, 1978.

Nagy, R. L., R. G. Broeker, and R. L. Gamble: "Firing Delayed Coke in a Fluidized Bed Steam Generator," NPRA Annual Meeting, San Francisco, March 1983.

Nelson, W. L.: *Oil Gas J.,* **72,** 70 (Jan. 14, 1974).

——— *Oil Gas J.,* **72,** 118 (Apr. 1, 1974).

——— *Oil Gas J.,* **76,** 71 (Oct. 9, 1978).

Oil Gas J., **78,** 78 (Mar. 24, 1980).

Oil Gas J., **80,** 134 (Dec. 27, 1982).

Rose, K. E.: *Hydrocarb. Process.,* **50**(7), 85 (1971).

Sikonia, John G., Frank Stolfa, and LeRoi E. Hutchings: *Oil Gas J.,* **79,** 141 (Oct. 5, 1981).

Zahnstecher, L. W., R. DeBiase, R. L. Godino, and A. A. Kutler: *Oil Gas J.,* **68,** 92 (Apr. 6, 1970).

Downloaded from Digital Engineering Library @ McGraw-Hill (www.digitalengineeringlibrary.com)
Copyright © 2004 The McGraw-Hill Companies. All rights reserved.
Any use is subject to the Terms of Use as given at the website.

Downloaded from Digital Engineering Library @ McGraw-Hill (www.digitalengineeringlibrary.com)
Copyright © 2004 The McGraw-Hill Companies. All rights reserved.
Any use is subject to the Terms of Use as given at the website.

Source: HANDBOOK OF PETROLEUM REFINING PROCESSES

CHAPTER 12.3
FW/UOP VISBREAKING PROCESS

Kenneth M. Negin and Fred M. Van Tine
Foster Wheeler USA Corporation
Clinton, New Jersey

INTRODUCTION

Visbreaking is a well-established noncatalytic thermal process that converts atmospheric or vacuum residues to gas, naphtha, distillates, and tar. Visbreaking reduces the quantity of cutter stock required to meet fuel oil specifications while reducing the overall quantity of fuel oil produced.

The conversion of these residues is accomplished by heating the residue material to high temperatures in a furnace. The material is passed through a soaking zone, located either in the heater or in an external drum, under proper temperature and pressure constraints so as to produce the desired products. The heater effluent is then quenched with a quenching medium to stop the reaction.

With refineries today processing heavier crudes and having a greater demand for distillate products, visbreaking offers a low-cost conversion capability to produce incremental gas and distillate products while simultaneously reducing fuel oil viscosity. Visbreaking can be even more attractive if the refiner has idle equipment available that can be modified for this service.

When a visbreaking unit is considered for the upgrading of residual streams, the following objectives are typically identified:

- Viscosity reduction of residual streams which will reduce the quantity of high-quality distillates necessary to produce a fuel oil meeting commercial viscosity specifications.
- Conversion of a portion of the residual feed to distillate products, especially cracking feedstocks. This is achieved by operating a vacuum flasher downstream of a visbreaker to produce a vacuum gas oil cut.
- Reduction of fuel oil production while at the same time reducing pour point and viscosity. This is achieved by utilizing a thermal cracking heater, in addition to a visbreaker heater, which destroys the high wax content of the feedstock.

Specific refining objectives must be defined before a visbreaker is integrated into a refinery, since the overall processing scheme can be varied, affecting the overall economics of the project.

Downloaded from Digital Engineering Library @ McGraw-Hill (www.digitalengineeringlibrary.com)
Copyright © 2004 The McGraw-Hill Companies. All rights reserved.
Any use is subject to the Terms of Use as given at the website.

FW/UOP VISBREAKING PROCESS

COIL VERSUS SOAKER DESIGN

Two visbreaking processes are commercially available. The first process is the *coil,* or *furnace,* type, which is the type offered through Foster Wheeler and UOP. The coil process achieves conversion by high-temperature cracking within a dedicated soaking coil in the furnace. With conversion primarily achieved as a result of temperature and residence time, coil visbreaking is described as a high-temperature, short-residence-time route. Foster Wheeler has successfully designed many heaters of this type worldwide.

The main advantage of the coil-type design is the two-zone fired heater. This type heater provides for a high degree of flexibility in heat input, resulting in better control of the material being heated. With the coil-type design, decoking of the heater tubes is accomplished more easily by the use of steam-air decoking.

Foster Wheeler's coil-type cracking heater produces a stable fuel oil. A stable visbroken product is particularly important to refiners who do not have many options in blending stocks.

The alternative *soaker* process achieves some conversion within the heater. However, the majority of the conversion occurs in a reaction vessel or soaker which holds the two-phase effluent at an elevated temperature for a predetermined length of time. Soaker visbreaking is described as a low-temperature, high-residence-time route. The soaker process is licensed by Shell. Foster Wheeler has engineered a number of these types of visbreakers as well.

By providing the residence time required to achieve the desired reaction, the soaker drum design allows the heater to operate at a lower outlet temperature. This lower heater outlet temperature results in lower fuel cost. Although there is an apparent fuel savings advantage experienced by the soaker-drum-type design, there are also some disadvantages. The main disadvantage is the decoking operation of the heater and soaker drum. Although decoking requirements of the soaker drum design are not as frequent as those of the coil-type design, the soaker design requires more equipment for coke removal and handling.

The customary practice of removing coke from a drum is to cut it out with high-pressure water. This procedure produces a significant amount of coke-laden water which needs to be handled, filtered, and then recycled for use again. Unlike delayed cokers, visbreakers do not normally include the facilities required to handle coke-laden water. The cost of these facilities can be justified for a coker, where coke cutting occurs every day. However, because of the relatively infrequent decoking operation associated with a visbreaker, this cost cannot be justified.

Product qualities and yields from the coil and soaker drum design are essentially the same at a given severity and are independent of visbreaker configuration.

FEEDSTOCKS

Atmospheric and vacuum residues are normal feedstocks to a visbreaker. These residues will typically achieve a conversion to gas, gasoline, and gas oil in the order of 10 to 50 percent, depending on the severity and feedstock characteristics. This will therefore reduce the requirement for fuel oil cutter stock. The conversion of the residue to distillate and lighter products is commonly used as a measurement of the severity of the visbreaking operation. Percent conversion is determined as the amount of 650°F+ (343°C+) material present in the atmospheric residue feedstock or 900°F+ (482°C+) material present in the vacuum residue feedstock which is visbroken into lighter boiling components.

The extent of conversion is limited by a number of feedstock characteristics, such as asphaltene, sodium, and Conradson carbon content. A feedstock with a high asphaltene con-

Downloaded from Digital Engineering Library @ McGraw-Hill (www.digitalengineeringlibrary.com)
Copyright © 2004 The McGraw-Hill Companies. All rights reserved.
Any use is subject to the Terms of Use as given at the website.

FW/UOP VISBREAKING PROCESS

tent will result in an overall lower conversion than a normal asphaltene feedstock, while maintaining production of a stable fuel oil from the visbreaker bottoms. Also the presence of sodium, as well as higher levels of feed Conradson carbon, can increase the rate of coking in the heater tubes. Minimizing the sodium content to almost a negligible amount and minimizing the Conradson carbon weight percent will result in longer cycle run lengths.

Variations in feedstock quality will impact the level of conversion obtained at a specific severity. Pilot plant analyses of a number of different visbreaker feedstocks have shown that, for a given feedstock, as the severity is increased, the viscosity of the 400°F+ (204°C+) visbroken tar initially decreases and then, at higher severity levels, increases dramatically, indicating the formation of coke precursors.

The point at which this viscosity reversal occurs differs from feed to feed but typically coincides with approximately 120 to 140 standard cubic feet (SCF) of $C_3 -$ gas production per barrel of feed (20.2 to 23.6 normal m^3/m^3). It is believed that this reversal in viscosity defines the point beyond which fuel oil instability will occur. Fuel oil instability is discussed in the next section of this chapter, "Yields and Product Properties."

The data obtained from these pilot tests have been correlated. The viscosity reversal point can be predicted and is used to establish design parameters for a particular feedstock to avoid the formation of an unstable fuel oil, while maximizing conversion.

Pilot plant work has also been done relating visbreaker heater run length to conversion and feedstock quality. Figure 12.3.1 graphically represents the decrease in heater run length with increasing feedstock conversion. This graph has been plotted with data for three atmospheric residues with varying feed Conradson carbon. Figure 12.3.1 shows that, for a given percent conversion, as the feed quality diminishes (i.e., as Conradson carbon grows higher), coking of the heater tubes increases, resulting in shorter run lengths.

It has been found that visbreaking susceptibilities bear no firm relationship with API density, which is the usual chargestock property parameter utilized in thermal cracking correlations. However, feedstocks with low *n*-pentane insolubles and low softening points show good susceptibility to visbreaking, while those having high values for these proper-

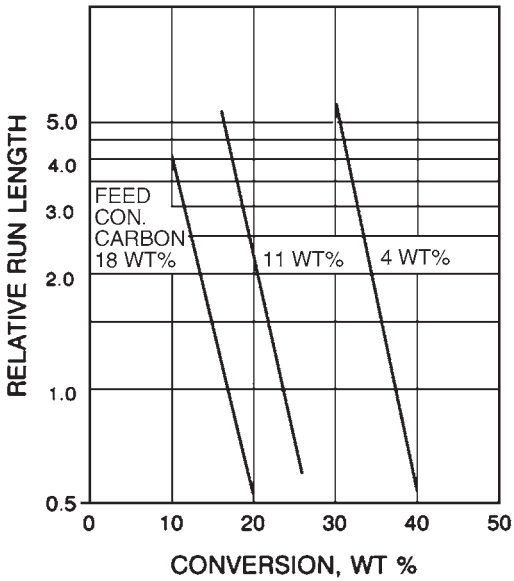

FIGURE 12.3.1. Relative run length versus conversion at various feed qualities.

Downloaded from Digital Engineering Library @ McGraw-Hill (www.digitalengineeringlibrary.com)
Copyright © 2004 The McGraw-Hill Companies. All rights reserved.
Any use is subject to the Terms of Use as given at the website.

FW/UOP VISBREAKING PROCESS

ties respond poorly. Figure 12.3.2 shows the capability of greater conversion at lower *n*-pentane insolubles for a 900°F+ (482°C+) vacuum residue.

Residues with low softening points and low *n*-pentane insolubles contain a greater portion of the heavy distillate, nonasphaltenic oil. It is this heavy oil that cracks into lower boiling and less viscous oils which results in an overall viscosity reduction. The asphaltenes, that fraction which is insoluble in *n*-pentane, goes through the furnace relatively unaffected at moderate severities. The table below shows the typical normal pentane insolubles content of vacuum residues prepared from base crudes.

Crude-type source of vacuum residue	Range of *n*-pentane insolubles, wt %
Paraffinic	2–10
Mixed	10–20
Naphthenic	18–28

YIELDS AND PRODUCT PROPERTIES

Product stability of the visbreaker residue is a main concern in selecting the severity of the visbreaker operating conditions. Severity, or the degree of conversion, if improperly determined, can cause phase separation of the fuel oil even after cutter stock blending. As previously described, increasing visbreaking severity and percent conversion will initially lead to a reduction in the visbroken fuel oil viscosity. However, visbroken fuel oil stability will decrease as the level of severity—and hence conversion—is increased beyond a certain point, dependent on feedstock characteristics.

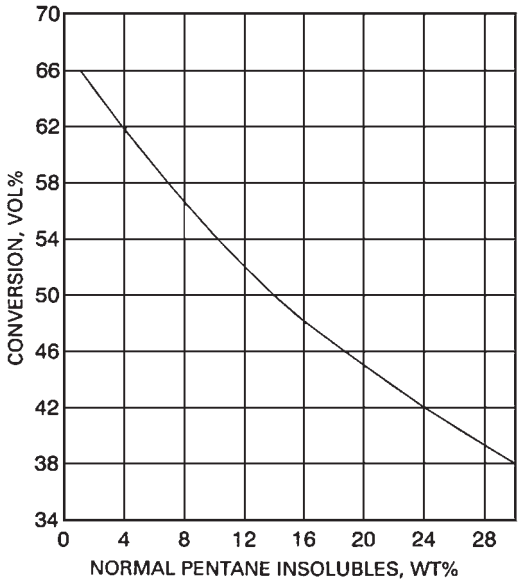

FIGURE 12.3.2. Visbreaking susceptibility (900°F+ charge converted).

Downloaded from Digital Engineering Library @ McGraw-Hill (www.digitalengineeringlibrary.com)
Copyright © 2004 The McGraw-Hill Companies. All rights reserved.
Any use is subject to the Terms of Use as given at the website.

FW/UOP VISBREAKING PROCESS

Until a few years ago, fuel oil stability was measured using the Navy Boiler and Turbine Laboratory (NBTL) heater test. The NBTL test was the accepted test to measure fuel oil stability. However, in the late 1980s there was a general consensus that the NBTL test did not accurately measure fuel oil stability and therefore American Society for Testing and Materials (ASTM) discontinued the test in 1990. Refiners today use the Shell hot filtration test or some variation of it to measure fuel oil stability.

Sulfur in the visbroken fuel oil residue can also be a problem. Typically the sulfur content of the visbreaker residue is approximately 0.5 wt % greater than the sulfur in the feed. Therefore it can be difficult to meet the commercial sulfur specifications of the refinery product residual fuel oil, and blending with low-sulfur cutter stocks may be required.

The development of yields is important in determining the overall economic attractiveness of visbreaking. Foster Wheeler uses its own in-house correlations to determine yield distributions for FW/UOP visbreaking. Our correlations have been based on pilot plant and commercial operating data which allow us to accurately predict the yield distribution for a desired severity while maintaining fuel oil stability. A typical visbreaker yield diagram showing trends of gas and distillate product yields as a function of percent conversion is presented in Fig. 12.3.3.

Also note in Fig. 12.3.3 that, as the percent conversion increases, the gas, gasoline, and gas oil product yields also increase. However, the conversion can be increased only to a certain point before risking the possible production of an unstable fuel oil. It should also be kept in mind that, at higher percent conversion, some of the gas oil product will further crack and be converted into gas and gasoline products. This will occur particularly when high conversion is achieved at higher heater outlet temperatures.

In Table 12.3.1 we provide typical feed and product properties for light Arabian atmospheric and vacuum residues. These yields are based on a standard severity and single-pass visbreaking while producing a stable visbroken residue. It should be noted that the resultant yield distribution for either a coil or soaker visbreaker is essentially the same for the same conversion.

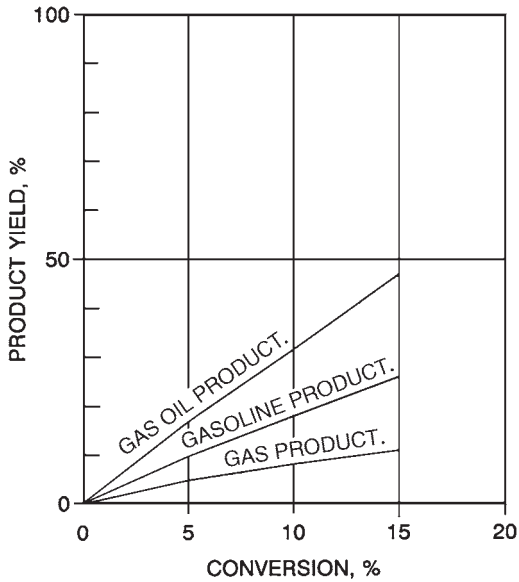

FIGURE 12.3.3. Typical yield trend, gas and distillate products.

Downloaded from Digital Engineering Library @ McGraw-Hill (www.digitalengineeringlibrary.com)
Copyright © 2004 The McGraw-Hill Companies. All rights reserved.
Any use is subject to the Terms of Use as given at the website.

FW/UOP VISBREAKING PROCESS

TABLE 12.3.1 Typical Yields and Product Properties

Feed properties	Light Arabian atmospheric residue				Light Arabian vacuum residue			
Density, °API	15.9				7.1			
Density, kg/m^3	960				1021			
Conradson carbon, wt %	8.5				20.3			
Sulfur, wt %	2.95				4.0			
Viscosity, cSt:								
At 130°F (54°C)	150				30,000			
At 210°F (99°C)	25				900			
Estimated yields	wt %	°API	kg/m^3	S, wt %	wt %	°API	kg/m^3	S, wt %
H_2S	0.2				0.2			
C_3 –	2.0				1.5			
C_4's	0.9				0.7			
C_5–330°F (C_5–166°C)	7.9	57.8	748	0.54	6.0	57.8	748	0.6
330–600°F (166–316°C)	14.5	36.5	842	1.34	15.5*	33.3	859	1.7
600°F+ (316°C+)	74.5	13.5	976	3.48	76.1†	3.5	1048	4.7
	100.0				100.0			

*330–662°F (166–350°C) cut for Light Arabian vacuum residue.
†662°F+ (350°C+) cut for Light Arabian vacuum residue.

OPERATING VARIABLES

The main operating variables in visbreaking are temperature, pressure, and residence time. Increasing any one of these three variables will result in an increase in overall severity. To achieve a certain severity, these variables can be interchanged within limits. For a given severity, as measured by conversion, product distribution and quality are virtually unchanged.

An increase in yields of distillate and gaseous hydrocarbons can be achieved by increasing visbreaking severity—for example, by raising the heater outlet temperature. Increasing visbreaker severity will also result in a reduction of cutter stock required to meet fuel oil specifications. However, the higher severities will cause the heavy distillate oils to break down and crack to lighter components. These heavy distillate oils act to solubilize (peptize) the asphaltic constituents. The asphaltic constituents will then tend to separate out of the oil and form coke deposits in the furnace tubes. Visbreaker operation at this level can cause premature unit shutdowns. There is also a tendency to produce unstable fuel oils at these more severe conditions.

PROCESS FLOW SCHEMES

Presented in this section are three visbreaking process schemes, with a diagram and a general description of each:

1. A typical visbreaker unit (Fig. 12.3.4)
2. A typical visbreaker unit with vacuum flasher (Fig. 12.3.5)
3. A typical combination visbreaker and thermal cracker (Fig. 12.3.6)

Downloaded from Digital Engineering Library @ McGraw-Hill (www.digitalengineeringlibrary.com)
Copyright © 2004 The McGraw-Hill Companies. All rights reserved.
Any use is subject to the Terms of Use as given at the website.

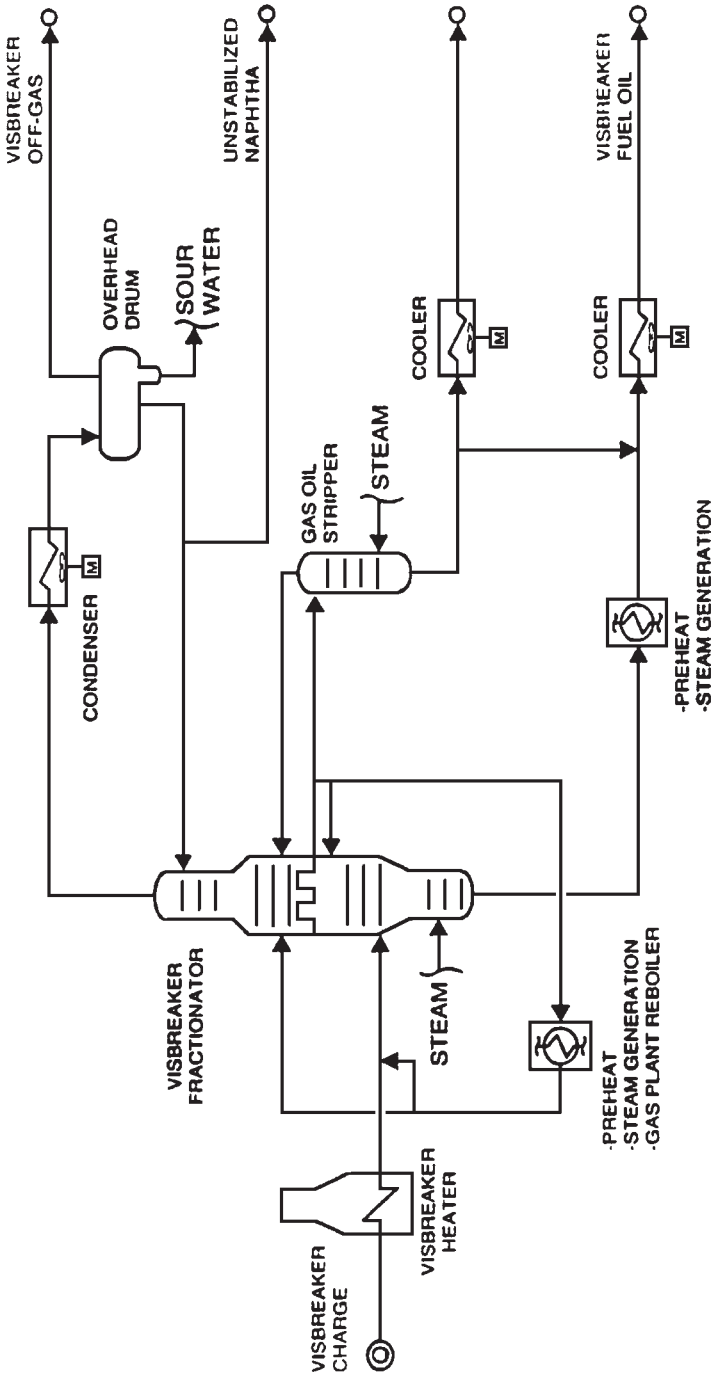

FIGURE 12.3.4. Process schematic for typical visbreaker unit. (*Foster Wheeler and UOP.*)

Downloaded from Digital Engineering Library @ McGraw-Hill (www.digitalengineeringlibrary.com)
Copyright © 2004 The McGraw-Hill Companies. All rights reserved.
Any use is subject to the Terms of Use as given at the website.

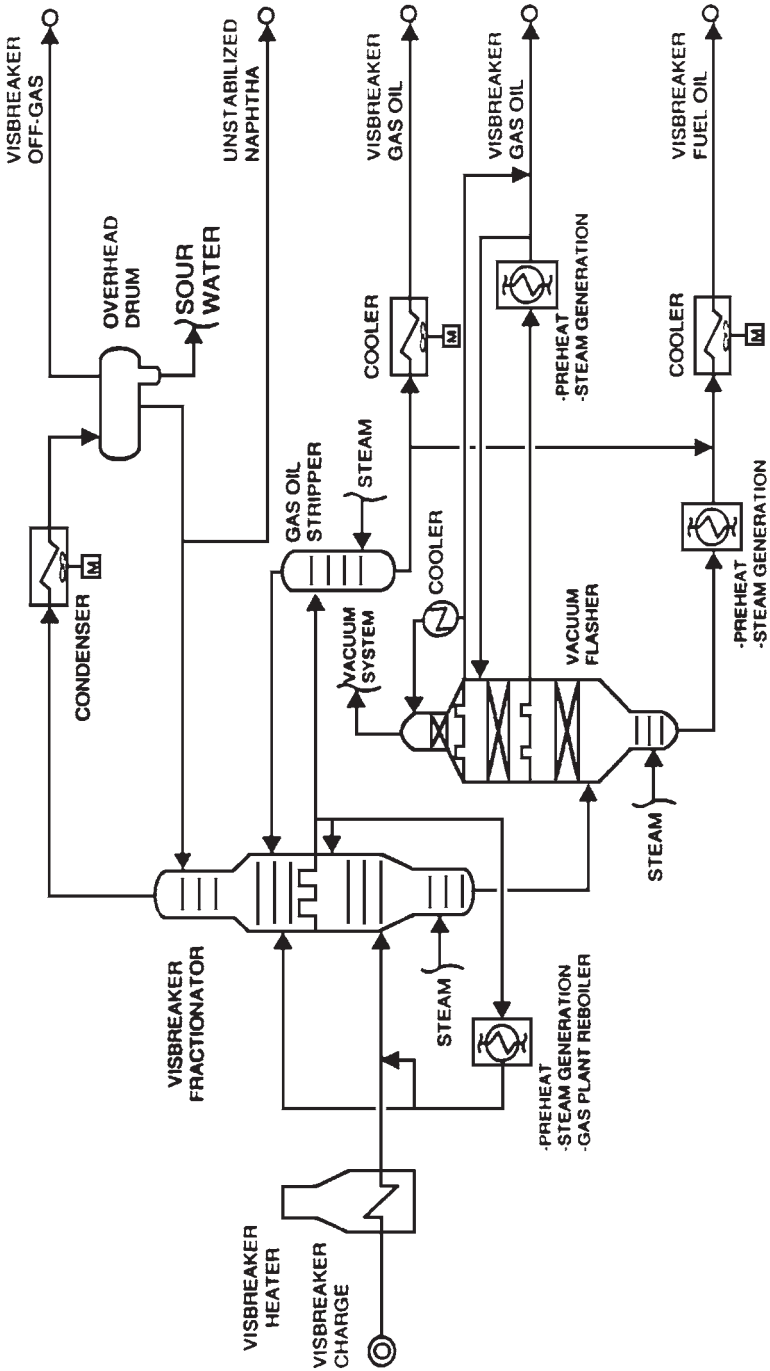

FIGURE 12.3.5. Process schematic for typical visbreaker unit with vacuum flasher. (*Foster Wheeler and UOP.*)

Downloaded from Digital Engineering Library @ McGraw-Hill (www.digitalengineeringlibrary.com)
Copyright © 2004 The McGraw-Hill Companies. All rights reserved.
Any use is subject to the Terms of Use as given at the website.

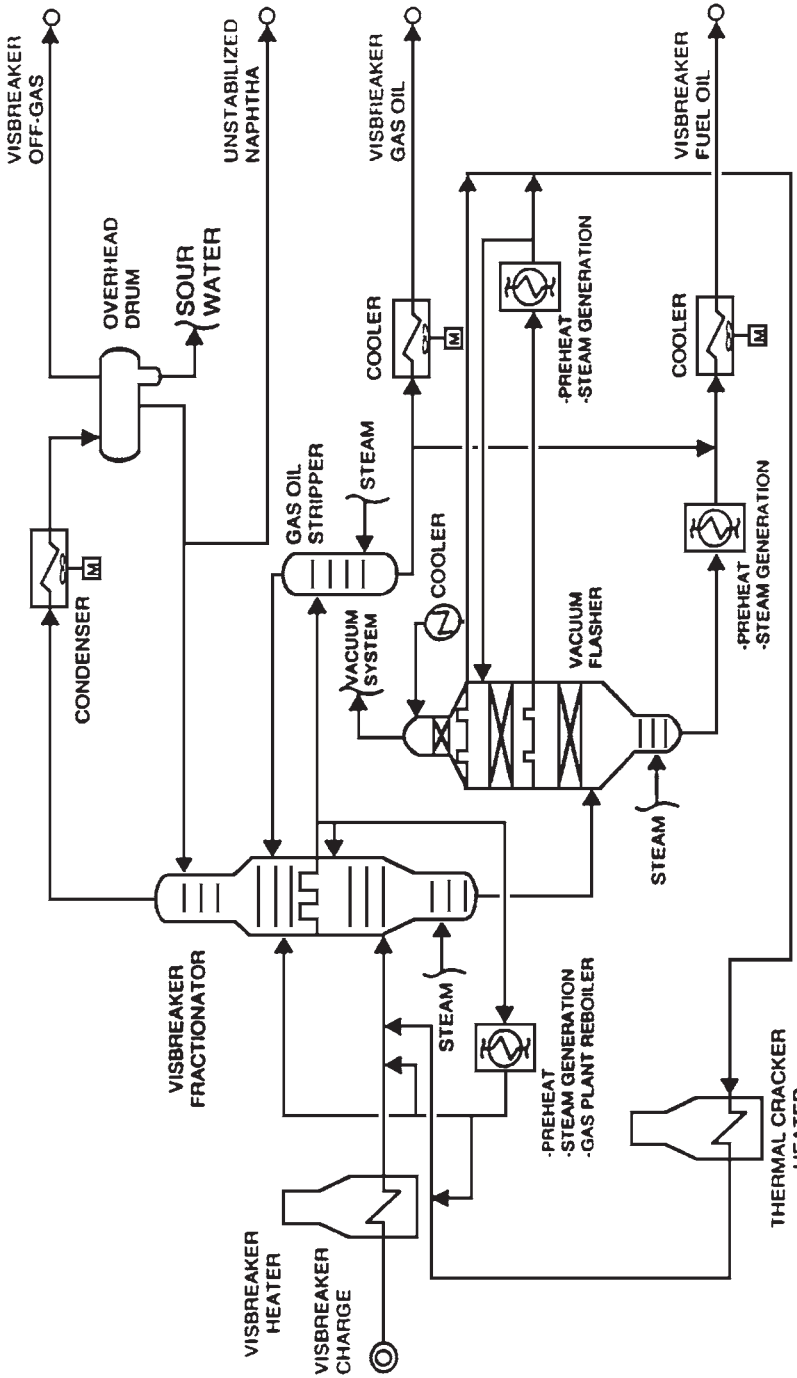

FIGURE 12.3.6. Process schematic for combination visbreaker and thermal cracker. (*Foster Wheeler and UOP.*)

Downloaded from Digital Engineering Library @ McGraw-Hill (www.digitalengineeringlibrary.com)
Copyright © 2004 The McGraw-Hill Companies. All rights reserved.
Any use is subject to the Terms of Use as given at the website.

FW/UOP VISBREAKING PROCESS

The first is the most basic scheme, the other two schemes being expanded versions. Figure 12.3.7 is a photograph of a visbreaker designed and built by Foster Wheeler in Spain.

Typical Visbreaker Unit

A typical visbreaker (Fig. 12.3.4) can be employed when viscosity reduction of residual streams is desired so that the need for high-quality distillate cutter stock can be reduced in order to produce a commercial-grade residual fuel oil.

The visbreaker unit is charged with atmospheric or vacuum residue. The unit charge is raised to the proper reaction temperature in the visbreaker heater. The reaction is allowed to continue to the desired degree of conversion in a soaking zone in the heater. Steam is injected into each heater coil to maintain the required minimum velocity and residence time and to suppress the formation of coke in the heater tubes. After leaving the heater soaking zone, the effluent is quenched with a quenching medium to stop the reaction and is sent to the visbreaker fractionator for separation.

The heater effluent enters the fractionator flash zone where the liquid portion flows to the bottom of the tower and is steam-stripped to produce the bottoms product. The vapor portion flows up the tower to the shed and wash section where it is cleaned and cooled with a gas oil wash stream. The washed vapors then continue up the tower. Gas oil stripper feed, as well as pumparound, wash liquid, and the gas oil to quench the charge are all removed on a side drawoff tray. The pumparound can be used to reboil gas plant towers, preheat boiler feedwater, and generate steam. The feed to the gas oil stripper is steam-stripped, and then a portion of it is mixed with visbreaker bottoms to meet viscosity reduction requirements; the remainder is sent to battery limits.

The overhead vapors from the tower are partially condensed and sent to the overhead drum. The vapors flow under pressure control to a gas plant. A portion of the condensed

FIGURE 12.3.7. Visbreaker designed and built by Foster Wheeler in Spain.

Downloaded from Digital Engineering Library @ McGraw-Hill (www.digitalengineeringlibrary.com)
Copyright © 2004 The McGraw-Hill Companies. All rights reserved.
Any use is subject to the Terms of Use as given at the website.

FW/UOP VISBREAKING PROCESS

hydrocarbon liquid is used as reflux in the tower and the remainder is sent to a stabilizer. Sour water is withdrawn from the drum and sent to battery limits.

Typical Visbreaker Unit with Vacuum Flasher

The flow scheme for this configuration (Fig. 12.3.5) is similar to the first scheme except that the visbreaker tower bottoms are sent to a vacuum tower where additional distillate products are recovered. This scheme may be desirable since a portion of the residual feed is converted to a cracking feedstock.

In this scheme, the visbreaker bottoms are sent to the vacuum tower flash zone. The liquid portion of the feed falls to the bottom section of the tower, where it is steam-stripped. The vapor portion rises through the tower wash section and then is partially condensed into distillate products. On this process flow diagram, we have shown two side draws. On the lower drawoff, heavy vacuum gas oil (HVGO) product and pumparound along with wash oil are withdrawn. On the upper one, light vacuum gas oil (LVGO) and reflux are withdrawn. LVGO and HVGO are then combined to form a single vacuum gas oil product which, after visbreaker fuel oil viscosity reduction requirements are met, can be used as a cracker feedstock.

The overhead vapors from the vacuum tower flow to a three-stage vacuum ejector system. Condensed vapor and motivating steam are collected in a condensate accumulator.

Typical Combination Visbreaker and Thermal Cracker

This last scheme is similar to the second except that the vacuum gas oil is routed to a thermal cracker heater instead of to battery limits as a product (Fig. 12.3.6). The vacuum gas oil is cracked and then sent to the visbreaker fractionator along with the visbreaker heater effluent.

A thermal cracking heater is utilized with a visbreaker when maximum light distillate conversion is desired or where extreme pour point reduction is required. Products from this last configuration are a blend of heavy vacuum tar and visbreaker atmospheric gas oil, plus a full range of distillates. Extreme pour point reduction is required for cases in which a high wax content feedstock is processed. The total conversion of the visbreaker vacuum gas oil essentially destroys all of the wax it contains, thus drastically reducing the pour point of the resulting visbreaker fuel oil.

REACTION PRODUCT QUENCHING

In order to maintain a desired degree of conversion, it is necessary to stop the reaction at the heater outlet by quenching. Quenching not only stops the conversion reaction to produce the desired results, but will also prevent production of an unstable bottoms product. For a coil-type visbreaker, quenching of the heater outlet begins from approximately 850 to 910°F (454 to 488°C) depending on the severity. The temperature of the quenched products depends on the overflash requirements and the type of quenching medium used. The overflash requirements are set by the need to maintain a minimum wash liquid rate for keeping the visbreaker fractionator trays wet and preventing excessive coking above the flash zone. Typically, the temperature of the quenched products in the flash zone will vary between approximately 730 and 800°F (388 and 427°C).

Quenching can be accomplished by using different mediums. The most frequently used quenching mediums are gas oil, residue, or a combination of both. These are discussed

Downloaded from Digital Engineering Library @ McGraw-Hill (www.digitalengineeringlibrary.com)
Copyright © 2004 The McGraw-Hill Companies. All rights reserved.
Any use is subject to the Terms of Use as given at the website.

FW/UOP VISBREAKING PROCESS

below. The decision as to which quenching medium is to be used must be made very early in a design. This decision will greatly affect the unit's overall heat and material balance as well as equipment sizing.

Gas oil is the most prevalent medium used for reaction quenching. The gas oil quench works primarily by vaporization and therefore requires a smaller amount of material to stop the conversion reaction than a residue quench. The gas oil quench promotes additional mixing and achieves thermal equilibrium rapidly. The residue quench operates solely by sensible heat transfer rather than the latent heat transfer of the gas oil quench.

The gas oil quench is a clean quench and thus minimizes the degree of unit fouling. It is believed that the use of a residue quench gives way to fouling in the transfer line and fractionator. Also the visbreaker bottoms circuit, from which the residue quench originates, is in itself subject to fouling. The gas oil quench arrangement increases the vapor and liquid loadings in the tower's flash zone, wash section, and pumparound. This will result in a larger tower diameter than if residue quench was used alone.

In order to achieve the same reaction quenching, residue quench flow rates need to be greater than for gas oil quenching. This, as noted above, is because gas oil quenches the reaction by vaporization and residue quenches by sensible heat. In addition, the quenching duty goes up as the percentage of residue quench increases. The actual quenching duty increases because more residue is required in order to achieve the same enthalpy at the flash zone. The use of residue quench means more tower bottoms, product plus recycle, are processed.

Residue quenching provides the potential for additional heat recovery within the unit at a higher temperature level than gas oil quenching. For example, heat recovery from a recycle residue stream may be between 680 and 480°F (360 and 249°C), while heat recovery for a gas oil stream may be from 620 to 480°F (327 to 249°C). With the increase in visbreaker bottoms, additional residue steam stripping is required, which also increases the size of the overhead condenser.

Some visbreaker units designed by Foster Wheeler and UOP employ a combination of both gas oil and residue quenching. It has been found for several visbreaker designs that using a combination quench rather than 100 percent gas oil will shift a significant amount of available heat from steam generation, in the gas oil pumparound, to feed preheat. This is normally preferred as it results in a smaller visbreaker heater and minimizes utility production.

Selection of a combination quench system is preferred for its overall unit flexibility. However, it is more expensive because of duplication of cooling services on the residue and gas oil circuits. It is believed, however, that additional cooling is advantageous since the visbreaking operation can continue by shifting gas oil/residue requirements, even if exchangers in the residue circuit become fouled. These exchangers can be bypassed without excessive turndown.

Additionally, the residue and gas oil quench can be used to vary the fractionator flash zone temperature. In visbreaking, many refiners try to keep the flash zone temperature as low as possible in order to minimize the potential for coking. When evaluating the flash zone temperature for a fixed overflash, increasing the percentage of residue will reduce this temperature. The flash zone could vary by as much as 50°F (28°C) between the extremes of total gas oil and residue quench. Figure 12.3.8 shows the basic relationship of the quench feed temperature to the flash zone as a function of the percentage of the reaction quench performed by residue quench. The total reaction quench duty as a function of percent quench by residue for a fixed overflash is also shown.

HEATER DESIGN CONSIDERATIONS

The heater is the heart of the coil-type visbreaker unit. In the design of its visbreakers, Foster Wheeler prefers using a horizontal tube heater for FW/UOP visbreaking to

Downloaded from Digital Engineering Library @ McGraw-Hill (www.digitalengineeringlibrary.com)
Copyright © 2004 The McGraw-Hill Companies. All rights reserved.
Any use is subject to the Terms of Use as given at the website.

FW/UOP VISBREAKING PROCESS

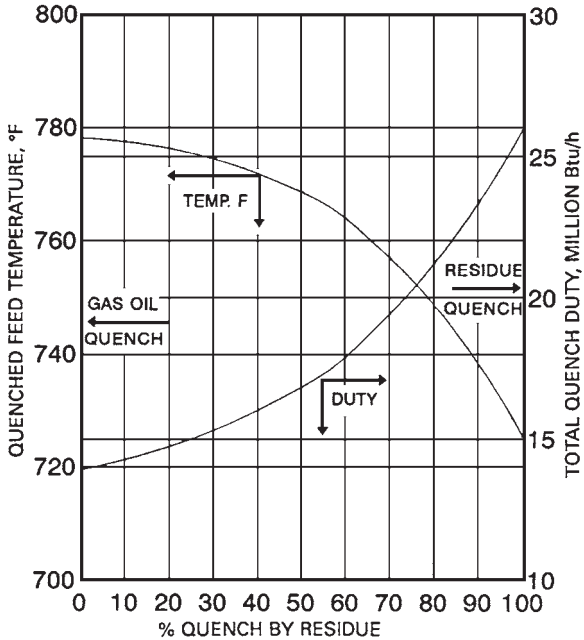

FIGURE 12.3.8. Quench parameters: quench feed temperature and duty versus residue quench.

ensure more uniform heating along the tube length. A horizontal-type heater allows the flow pattern for each pass to be as symmetrical as possible. Overheating of one pass can result in thermal degradation of the fluid and eventual coking of that pass. Horizontal-type heaters are also preferred since they have drainable type systems, and liquid pockets cannot develop as in vertical type heaters.

For the coil-type design, the heater is designed with two independently fired zones. The first is a preheat cell which heats the feed to reaction temperature, approximately 800°F (427°C). The second is a reaction cell which provides the heat input and residence time required for the desired reaction. The visbreaking reaction continues as the fluid leaves the furnace, where it is stopped by quenching. Figure 12.3.9 shows a typical temperature curve for the preheat and reaction zones of a visbreaker heater. This figure shows an 865°F (463°C) heater outlet temperature; however, this temperature can be over 900°F (482°C), depending on the severity of the operation.

In order to achieve the desired residence time in the heater, coil volume in the reaction section is very important. The coil volume will directly affect the cost of the heater. The coil volume specified by Foster Wheeler in designing these heaters is based on previous experience and operating data. During operation, the residence time can be adjusted by controlling the heat input to the reaction cell, the back-pressure on the heater, and the injection steam rate.

Visbreaker heaters typically have a process preheat coil and a steam superheat coil in the convection section. The steam coil is used for superheating steam for residue and gas oil stripping. Steam generation is normally not required in the heater convection section, since the visbreaker produces steam in its bottoms and pumparound circuits.

The heater tube metallurgy is specified as 9% Cr–1% Mo for the main process coil in both the radiant and convection sections. This material is required because of the high

Downloaded from Digital Engineering Library @ McGraw-Hill (www.digitalengineeringlibrary.com)
Copyright © 2004 The McGraw-Hill Companies. All rights reserved.
Any use is subject to the Terms of Use as given at the website.

FW/UOP VISBREAKING PROCESS

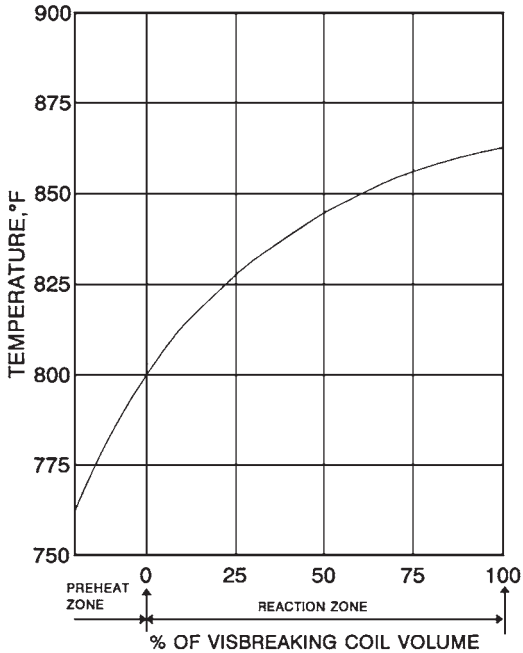

FIGURE 12.3.9. Heater temperature curve.

heater outlet temperature, regardless of the weight percent sulfur in the feed. Steam superheat coils are usually specified as carbon steel.

Foster Wheeler and UOP typically specify a normal (clean) pressure drop of approximately 300 lb/in^2 gage (20.7 bar gage) and a dirty (fouled) pressure drop of approximately 400 lb/in^2 gage (27.6 bar gage). The elastic design pressure of the heater tubes is based on the shutoff pressure of the charge pump at maximum suction. Some refiners use a relief valve, located at the heater outlet, to lower the design pressure required for the tubes. Foster Wheeler and UOP do not rely on a relief valve in this service, as the inlet to the valve tends to coke up.

Turndown on a visbreaker heater is typically limited to 60 percent of design capacity. On some projects, clients have installed two heaters, which provide greater unit turndown capability. The additional heater also allows decoking of one heater without shutting down the unit. A two-heater visbreaker may be economically justified for larger units.

The visbreaker heater can be fired on fuel gas, fuel oil, or visbreaker tar. It is economically attractive to fire the visbreaker heater on visbreaker tar since no external fuel source would be needed. However, tar firing requires correctly designed burners to avoid problems of poor combustion. The burners typically require tar at high pressure and low viscosity. Therefore the tar system needs to be maintained at a higher temperature than a normal fuel oil system. Although refiners may prefer to fire the heater with visbreaker tar, many are being forced to burn cleaner fuel gases so as to comply with environmental regulations.

Downloaded from Digital Engineering Library @ McGraw-Hill (www.digitalengineeringlibrary.com)
Copyright © 2004 The McGraw-Hill Companies. All rights reserved.
Any use is subject to the Terms of Use as given at the website.

FW/UOP VISBREAKING PROCESS

TYPICAL UTILITY REQUIREMENTS

The following represents typical utility consumptions for a coil-type visbreaker:

Power, kW/BPSD [kW/(m3 · h) feed]	0.0358 [0.00938]
Fuel, 10^6 Btu/bbl (kWh/m^3 feed)	0.1195 (220)
Medium-pressure steam, lb/bbl (kg/m^3 feed)	6.4 (18.3)
Cooling water, gal/bbl (m^3/m^3 feed)	71.0 (1.69)

ESTIMATED INVESTMENT COST

Estimated capital costs for a coil-type visbreaker without vacuum flasher or gas plant are $17 million in 10,000 BPSD (66.2 m^3/h) capacity and $33 million in 40,000 BPSD (265 m^3/h) capacity.

These are conceptual estimates with ±30 percent accuracy. They apply to battery-limits process units, based on U.S. Gulf Coast, second quarter 2002, built according to instant execution philosophy, through mechanical completion only. The estimates assume that land is free of aboveground and underground obstructions. Excluded are cost of land, process licensor fees, taxes, royalties, permits, duties, warehouse spare parts, catalysts, forward escalation, support facilities, and all client costs.

BIBLIOGRAPHY

Allan, D., C. Martinez, C. Eng, and W. Barton, *Chemical Engineering Progress,* p. 85, January 1983.

McKetta, J., and W. Cunningham, "Visbreaking Severity Limits," *Petroleum Processing Handbook,* Marcel Dekker, New York, 1992, p. 311.

Rhoe, A., and C. de Blignieres, *Hydrocarbon Processing,* p. 131, January 1979.

Downloaded from Digital Engineering Library @ McGraw-Hill (www.digitalengineeringlibrary.com)
Copyright © 2004 The McGraw-Hill Companies. All rights reserved.
Any use is subject to the Terms of Use as given at the website.

Downloaded from Digital Engineering Library @ McGraw-Hill (www.digitalengineeringlibrary.com)
Copyright © 2004 The McGraw-Hill Companies. All rights reserved.
Any use is subject to the Terms of Use as given at the website.

Source: HANDBOOK OF PETROLEUM REFINING PROCESSES

P · A · R · T · 13

OXYGENATES PRODUCTION TECHNOLOGIES

Downloaded from Digital Engineering Library @ McGraw-Hill (www.digitalengineeringlibrary.com)
Copyright © 2004 The McGraw-Hill Companies. All rights reserved.
Any use is subject to the Terms of Use as given at the website.

Downloaded from Digital Engineering Library @ McGraw-Hill (www.digitalengineeringlibrary.com)
Copyright © 2004 The McGraw-Hill Companies. All rights reserved.
Any use is subject to the Terms of Use as given at the website.

Source: HANDBOOK OF PETROLEUM REFINING PROCESSES

CHAPTER 13.1
HÜLS ETHERS PROCESSES

Steve Krupa and Jill Meister
UOP LLC
Des Plaines, Illinois

INTRODUCTION

During the early 1990s, the oxygenate portion of the gasoline pool was the fastest-growing gasoline component, and the majority of this growth was in methyl tertiary butyl ether (MTBE). The major reasons for this growth were generally considered to be environmental concerns and octane upgrades. Countries such as the United States, Korea, and Taiwan mandated the use of oxygenates in gasoline to promote cleaner-burning fuels. Lead phase-down programs, the introduction of midgrade and higher-octane premium gasolines, and newer, more sophisticated car engines all contributed to a steadily increasing demand for higher-quality gasoline and thus a continuing need to increase the octane of the refinery gasoline pool.

In the late 1990s regulators in the United States passed legislation requiring the phase-out of MTBE from many markets in the early 2000s, due to numerous instances of groundwater contamination with MTBE. The major cause of the contamination is leaking underground storage tanks and pipelines and limited biodegradability. Some people have a very low taste threshold of ~10 ppb MTBE in H_2O. Very few new ether units for fuels applications have been constructed since the U.S. action. By 2002 many U.S. producers stopped MTBE production and were considering alternative technology to consume isobutene by reusing MTBE plant equipment (see UOP InAlk process).

An important source of MTBE, as well as other ethers, is the refinery. In 1994, installed refinery MTBE capacity of more than 5.57 million metric tons per annum (MTA) [129,000 barrels per stream-day (BPSD)] represented about 28 percent of the worldwide MTBE production. Other major sources of MTBE production are from the dehydrogenation of isobutene (see Chap. 5.1), as a by-product from propylene oxide production, and from naphtha cracker C_4s.

Although MTBE is the most common ether, it is not the only ether used in gasoline blending today. Tertiary amyl methyl ether (TAME), ethyl tertiary butyl ether (ETBE), and diisopropyl ether (DIPE) are also used as gasoline blending ethers. Table 13.1.1 provides a list of the gasoline blending properties of ethers being used in gasoline pools. In addition to providing a gasoline oxygenate source, these ethers have excellent research and motor blending octanes.

Downloaded from Digital Engineering Library @ McGraw-Hill (www.digitalengineeringlibrary.com)
Copyright © 2004 The McGraw-Hill Companies. All rights reserved.
Any use is subject to the Terms of Use as given at the website.

HÜLS ETHERS PROCESSES

TABLE 13.1.1 Refinery Oxygenates

	Blending octane			Blending RVP		
Ethers	RONC	MONC	$(R + M)/2$	kg/cm^2	lb/in^2	Oxygen, wt %
MTBE	118	100	109	0.56–0.70	8–10	18.2
DIPE	112	98	105	0.28–0.35	4–5	15.7
TAME	111	98	105	0.21–0.35	3–5	15.7
ETBE	117	102	110	0.21–0.35	3–5	15.7

Note: RVP = Reid vapor pressure; RONC = research octane number clear; MONC = motor octane number clear; $(R + M)/2$ (RONC)/2 (sometimes referred to as road octane).

Ethers are generally favored over alcohols in gasoline blending for two reasons: they have a very low solubility in water compared to alcohols, and they have a low blending vapor pressure compared to alcohols.

HÜLS ETHERS PROCESS FOR MTBE, ETBE, AND TAME

The Hüls ethers processes for MTBE, TAME, ETBE, and tert-amyl ethyl ether (TAEE), formerly colicensed by UOP and Hüls AG, are now licensed exclusively from UOP in Des Plaines, Illinois, as part of the UOP Ethermax process technology. This process can be used to produce the ethers for gasoline blending from olefin feedstocks available within a refinery. Depending on the type of hydrocarbon and alcohol feed, the following etherification reactions take place:

$$\underset{\text{Isobutylene}}{CH_2 = C(CH_3)_2} + \underset{\text{Methanol}}{CH_3OH} \rightarrow \underset{\text{MTBE}}{(CH_3)_3{-}C{-}O{-}CH_3} \tag{13.1.1}$$

$$\underset{\text{Isobutylene}}{CH_2 = C(CH_3)_2} + \underset{\text{Ethanol}}{CH_3CH_2OH} \rightarrow \underset{\text{ETBE}}{(CH_3)_3{-}C{-}O{-}CH_2CH_3} \tag{13.1.2}$$

$$\underset{\text{Isoamylene}}{CH_3CH = C(CH_3)_2} + \underset{\text{Methanol}}{CH_3OH} \rightarrow \underset{\text{TAME}}{CH_3CH_2\,(CH_3)_2{-}C{-}O{-}CH_3} \tag{13.1.3}$$

The reactions proceed in the liquid phase at mild conditions in the presence of a solid acidic catalyst. The catalyst typically is a sulfonic ion-exchange resin. The reaction temperature is kept low and can be adjusted over a fairly broad range. Higher temperatures are possible, but excessive temperatures are not recommended because resin fouling from polymers can occur. Around 130°C (266°F), sulfonic ion-exchange resins become unstable. Operation in the lower temperature range ensures stable operation and long catalyst life.

The reaction of an isoolefin with alcohol is conducted in the presence of a small excess of alcohol relative to that required for the stoichiometric reaction of the isoolefin contained in the hydrocarbon feed. Operation with a small excess of alcohol has a number of advantages and practically no drawbacks because any excess alcohol is recovered and recycled. Some of the advantages are that

- The equilibrium is displaced toward the production of ether to favor higher per-pass conversion.
- Production of high-octane ether is maximized, and production of lower-octane oligimers is minimized.

Downloaded from Digital Engineering Library @ McGraw-Hill (www.digitalengineeringlibrary.com)
Copyright © 2004 The McGraw-Hill Companies. All rights reserved.
Any use is subject to the Terms of Use as given at the website.

HÜLS ETHERS PROCESSES

- Process temperature is more efficiently and securely controlled.

In the absence of a small excess of alcohol, isoolefin dimerization, also exothermic, can take place rapidly. This reaction can result in a sharp temperature rise in the resin bed. Such an increase causes irreversible catalyst fouling, and catalyst destruction can occur if the temperature rise is excessive.

Under proper conditions, the etherification reaction is nearly 100 percent selective except for minor side reactions resulting from the presence of certain feed impurities. Water contained in the feed results in equivalent amounts of tertiary butyl alcohol (TBA) in the MTBE or ETBE product. Water in isoamylene feed yields tertiary amyl alcohol (TAA) in the TAME product. In small quantities, these alcohol by-products are unimportant. They need not be separated from the ether product because they have high octane values and can be used as gasoline blending agents.

Either a one-stage or two-stage Hülls design can be used for MTBE, TAME, or ETBE production. A simplified flow diagram of the single- and two-stage designs is shown in Figs. 13.1.1 and 13.1.2, respectively. The two-stage unit produces higher conversion levels but costs more compared to the one-stage design.

Because of the lower cost, the Hülls one-stage design is by far the most common inside the refinery. Two-stage units are typically built only when extremely high-purity raffinate is required, such as in butene-1 production, or when the raffinate is used in a recycle operation. Typical one-stage olefin conversions are shown in Table 13.1.2.

PROCESS FLOW

The fresh hydrocarbon feed must be treated in a water wash if it comes from a fluid catalytic cracking (FCC) unit. The treatment step is needed to remove basic nitrogen compounds, which are catalyst poisons. This procedure is not necessary if the feed comes from either a steam cracker or a UOP Oleflex* unit. In the case of TAME production, diolefins must also be removed in a hydrogenation unit (see Chap. 8.2). Figure 13.1.1 is a simplified single-stage process flow diagram. The clean fresh feed is mixed with fresh and recycled alcohol and charged to the reactor section. The reactor can be a tubular reactor, or more typically, two adiabatic reactors with recycle are used. The majority of the reaction occurs in the first reactor. The second reactor completes the reaction of isoolefins to ether. Cooling between reactors is required to maximize the approach to equilibrium in the second reactor.

The product from the reactor section primarily contains ether, excess alcohol (methanol or ethanol), and unreacted C_4 or C_5 hydrocarbons. This stream is sent to a fractionation column, where high-purity MTBE, ETBE, or TAME is recovered from the bottoms. The unreacted hydrocarbon, typically referred to as the *raffinate stream,* and alcohol are taken off the top of the fractionator. Before it leaves the unit, the raffinate is water-washed to remove excess alcohol. The water-alcohol mixture from the water wash is fractionated in the alcohol recovery section. The recovered alcohol is recycled back to the reactor, and the water is recycled back to the water wash.

YIELDS

The yields in Table 13.1.3 are representative of the oxygenate production from FCC olefins using a single-stage Hülls process to separately process the C_4 and C_5 cuts. The TAME process feed is assumed to be pretreated in a diene saturation unit.

*Trademark and/or service mark of UOP.

Downloaded from Digital Engineering Library @ McGraw-Hill (www.digitalengineeringlibrary.com)
Copyright © 2004 The McGraw-Hill Companies. All rights reserved.
Any use is subject to the Terms of Use as given at the website.

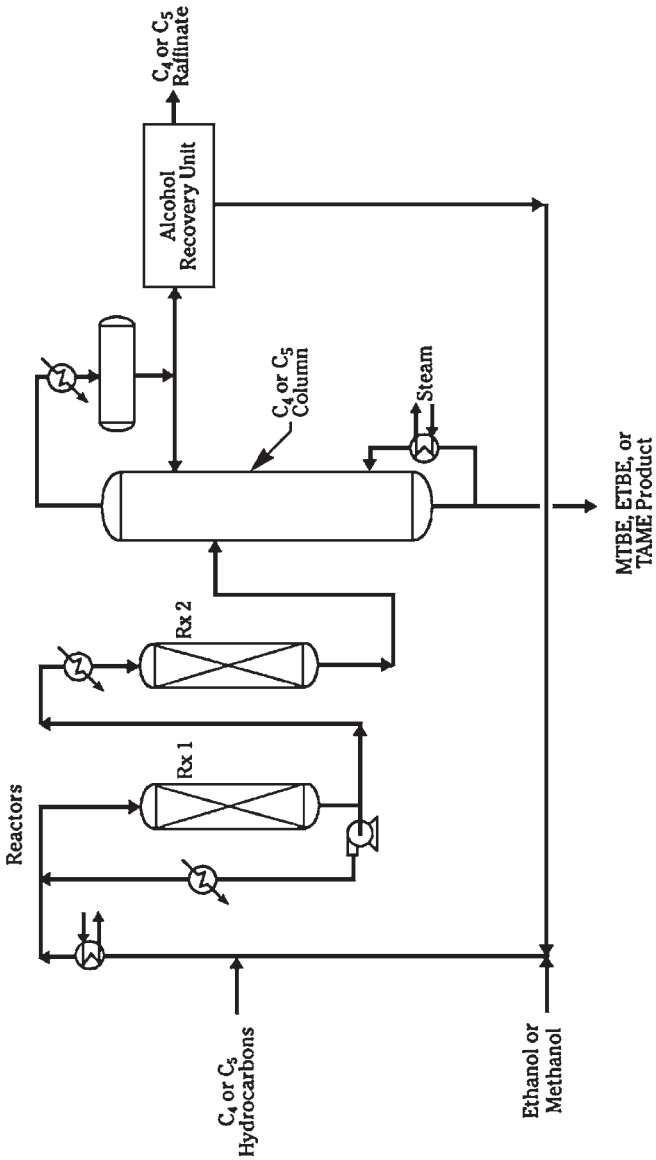

FIGURE 13.1.1 Hüls MTBE, ETBE, and TAME process—single-stage unit.

Downloaded from Digital Engineering Library @ McGraw-Hill (www.digitalengineeringlibrary.com)
Copyright © 2004 The McGraw-Hill Companies. All rights reserved.
Any use is subject to the Terms of Use as given at the website.

HÜLS ETHERS PROCESSES

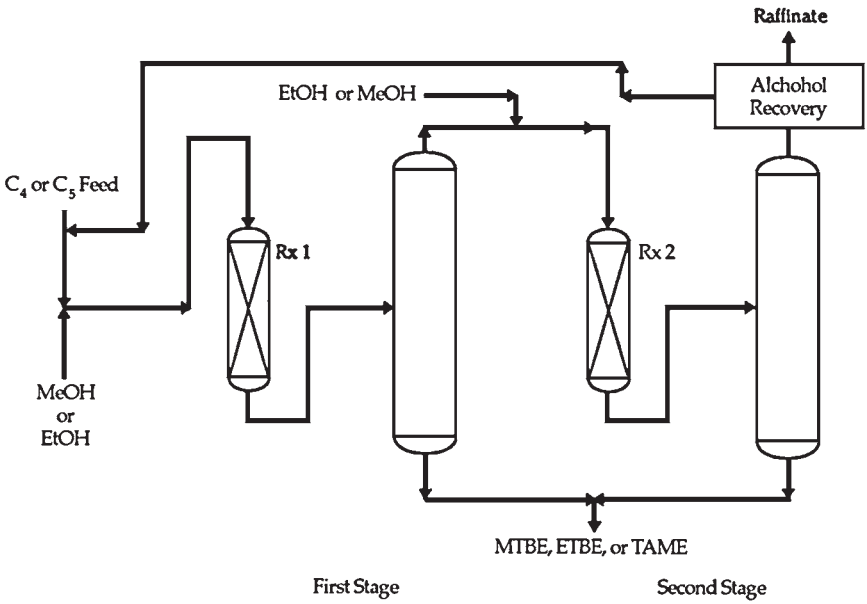

FIGURE 13.1.2 Hüls MTBE, ETBE, and TAME process—two-stage unit.

TABLE 13.1.2 Typical One-Stage Olefin Conversions

Olefin feedstocks	MTBE	TAME	ETBE
Isobutylene	96–97%	—	86–88%
Isoamylene	—	65–70%	—

ECONOMICS AND OPERATING COSTS

The estimated erected cost of a UOP-designed single-stage Hüls MTBE process unit for the production of 60,000 MTA (1520 BPD) of MTBE in 1995 was $8.2 million. This capital estimate is for an inside-battery-limits unit erected on the U.S. Gulf Coast.

The utility requirements for a 60,000 MTA (1520 BPD) MTBE unit and 75,000 MTA (1825 BPD) TAME, respectively, are estimated in Table 13.1.4. For an update on project economics and utilities, see the UOP Ethermax technology section.

COMMERCIAL EXPERIENCE

Twenty Hüls MTBE units have been brought on-stream. The first unit started up in 1976 in Marl, Germany. Operating plant capacities range up to about 600,000 MTA (15,200 BPSD) of MTBE. The units cover the entire range of feed compositions, product qualities, isobutylene conversions, and end uses for MTBE. Five Hüls MTBE units were revamped to Hüls ETBE operation in the late 1990s and early 2000s.

Downloaded from Digital Engineering Library @ McGraw-Hill (www.digitalengineeringlibrary.com)
Copyright © 2004 The McGraw-Hill Companies. All rights reserved.
Any use is subject to the Terms of Use as given at the website.

TABLE 13.1.3 Ethers Production from Single-Stage Units

	Hüls MTBE process, MTA (BPD)	Hüls ETBE process, MTA (BPD)	Hüls TAME process, MTA (BPD)
Total hydrocarbon feed	264,100 (8437)	264,100 (8437)	305,700 (8971)
Reactive components in the feed:			
Hydrocarbons:			
iC_4	39,600 (1247)	39,600 (1247)	—
iC_5	—	—	76,500 (2167)
Alcohols:			
Methanol	22,000 (522)	—	23,700 (562)
Ethanol	—	28,100 (666)	—
Ethers product:			
MTBE	60,000 (1520)	—	—
ETBE	—	62,000 (1573)	—
TAME	— —	75,000 (1825)	

Note: MTA = metric tons per annum; BPD = barrels per day; *i* = iso.

TABLE 13.1.4 Utility Requirements

Utilities	MTBE	TAME
Power, kWh	129	160
Low-pressure steam, MT/h (klb/h)	7.2 (15.8)	12.0 (26.4)
Condensate,* MT/h (klb/h)	7.2 (15.8)	12.0 (26.4)
Cooling water, m^3/h (gal/min)	64 (282)	63 (278)

*Denotes export.
Note: MT/h = metric tons per hour.

Downloaded from Digital Engineering Library @ McGraw-Hill (www.digitalengineeringlibrary.com)
Copyright © 2004 The McGraw-Hill Companies. All rights reserved.
Any use is subject to the Terms of Use as given at the website.

Source: HANDBOOK OF PETROLEUM REFINING PROCESSES

CHAPTER 13.2

UOP ETHERMAX PROCESS FOR MTBE, ETBE, AND TAME PRODUCTION

Steve Krupa, Jill Meister, and Charles Luebke
UOP LLC
Des Plaines, Illinois

PROCESS DESCRIPTION

The Ethermax* process, licensed exclusively by UOP,* can be used to produce methyl tertiary butyl ether (MTBE), tertiary amyl methyl ether (TAME), or ethyl tertiary butyl ether (ETBE). This process combines the Hüls fixed-bed etherification process with advanced RWD† catalytic distillation technology from Koch-Glitsch, Inc. The combined technology overcomes reaction equilibrium limitations inherent in a conventional fixed-bed etherification process.

The Ethermax process reacts tertiary olefins, such as isobutylene and isoamylene, over an acid resin in the presence of alcohol to form an ether. The reaction chemistry and unit operating conditions are essentially the same as those of a conventional ether process, such as the Hüls MTBE process (Chap. 13.1), except that KataMax† packing has been added to increase the overall conversion.

KataMax packing represents a unique and proprietary approach to exposing a solid catalyst to a liquid stream inside a distillation column. The reactive distillation zone of the RWD column uses KataMax packing to overcome reaction equilibrium constraints by continuously fractionating the ether product from unreacted feed components. As the ether product is distilled away, the reacting mixture is no longer at equilibrium. Thus, fractionation in the presence of the catalyst promotes additional conversion of the reactants. Isobutylene conversions of 99 and 97 percent, respectively, for MTBE and ETBE are typical, and isoamylene conversions of up to 94 percent can be achieved economically with this process. These design specifications are typical for gasoline blending; however, practically any olefin conversion is achievable by designing a unit to accommodate individual refinery needs. For example, the Ethermax process can be designed to convert 99.9+ percent of the isobutylene when butene-1 production is a design objective.

*Trademark and/or service mark of UOP.
†Trademark of Koch-Glitsch, Inc.

Downloaded from Digital Engineering Library @ McGraw-Hill (www.digitalengineeringlibrary.com)
Copyright © 2004 The McGraw-Hill Companies. All rights reserved.
Any use is subject to the Terms of Use as given at the website.

UOP ETHERMAX PROCESS FOR MTBE, ETBE, AND TAME PRODUCTION

The flexibility of the Ethermax process provides refiners with many routes to increase oxygenate or octane levels in their gasoline pool. Existing MTBE units can be converted to TAME or ETBE production. Increases in throughput and olefin conversion are possible in an existing ether unit by revamping it to the Ethermax process. The revamp increases the oxygenate level of the gasoline pool, and the resulting octane improvement gives a refiner the flexibility to optimize gasoline production from other refinery processes.

PROCESS FLOW

The process flow for the Ethermax process is shown in Fig. 13.2.1. The majority of the reaction is carried out in a simple fixed-bed adiabatic reactor. The effluent from this reactor feeds the RWD column, where the ethers are separated from unreacted feed components. The bottoms from the RWD column are the MTBE, ETBE, or TAME product. The unreacted components move up the column and enter the catalytic section of the fractionator for additional conversion. The catalytic section of the RWD column uses KataMax packing to overcome reaction equilibrium constraints by simultaneously reacting the feed component and fractionating the ether product.

The overhead from the RWD column is routed to the alcohol (either methanol or ethanol) recovery section. In this system, water is used to separate the alcohol from the hydrocarbon in a simple countercurrent extraction column, and a distillation column is used to recover the alcohol. The recovered alcohol is recycled to the reactor section. The hydrocarbon raffinate is generally sent downstream to an alkylation unit in the case of C_4s and some of the C_5s. Depending on the gasoline Reid vapor pressure (RVP) specification, the C_5s may be blended directly into the gasoline pool.

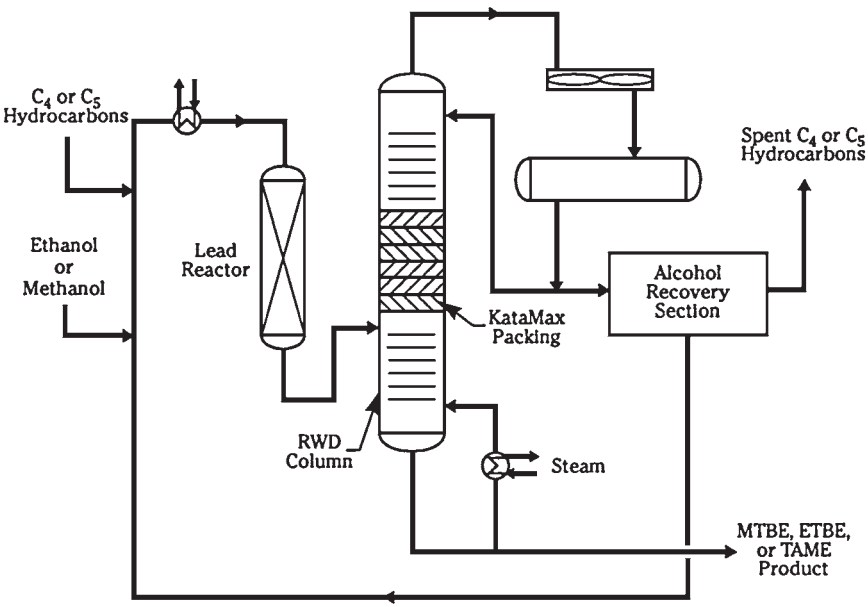

FIGURE 13.2.1 Ethermax process.

Downloaded from Digital Engineering Library @ McGraw-Hill (www.digitalengineeringlibrary.com)
Copyright © 2004 The McGraw-Hill Companies. All rights reserved.
Any use is subject to the Terms of Use as given at the website.

UOP ETHERMAX PROCESS FOR MTBE, ETBE, AND TAME PRODUCTION

YIELDS

The example in Table 13.2.1 represents oxygenate production from fluid catalytic cracking (FCC) olefins using the Ethermax process to separately process the C_4 and C_5 cuts. The TAME feed is assumed to be pretreated to saturate dienes.

OPERATING COST AND ECONOMICS

The estimated utilities for a 50,000 metric ton per annum (MTA) (1279 BPD) Ethermax unit producing MTBE and a 70,000 MTA (1729 BPD) Ethermax unit producing TAME, respectively, are given in Table 13.2.2. The 2002 estimated erected cost for an Ethermax unit to produce 50,000 MTA (1279 BPD) of MTBE is $8 million U.S. and $11.5 million U.S. to produce 70,000 MTA (1729 BPD) of TAME including the SHP, based on the inside battery limits of the process unit erected in the U.S. Gulf Coast.

ETHERMAX COMMERCIAL EXPERIENCE

The first Ethermax process unit was commissioned at the Hüls AG, Marl, Germany, facility in March 1992. As of 2002, another 10 Ethermax process units have been placed onstream. These units process a wide variety of feedstocks from FCC, stream cracking, and dehydrogenation units. The performance of all operating units has exceeded representations. An additional 11 Ethermax units have been licensed. Together these units represent more than 7,925 kMTA (200,000 BPSD) of ethers capacity.

An improved KataMax packing design was commercialized in 1996. The new design further improved the already superior hydraulic capacity of the KataMax packing while maintaining excellent pressure drop and mass-transfer characteristics.

TABLE 13.2.1 Oxygenate Production from Ethermax Process

	MTBE operation, MTA (BPD)	TAME operation, MTA (BPD)
Total FCC hydrocarbon feed	174,800 (5632)	200,600 (5960)
Reactive components in the feed:		
Hydrocarbons:		
iC_4	33,000 (1052)	—
iC_5	—	61,000 (1688)
Alcohols:		
Methanol	18,200 (436)	21,500 (515)
Ethers product:		
MTBE	50,000 (1279)	—
TAME	—	70,000 (1729)

Note: MTA = metric tons per annum; BPD 5 barrels per day; *i* = iso.

Downloaded from Digital Engineering Library @ McGraw-Hill (www.digitalengineeringlibrary.com)
Copyright © 2004 The McGraw-Hill Companies. All rights reserved.
Any use is subject to the Terms of Use as given at the website.

UOP ETHERMAX PROCESS FOR MTBE, ETBE, AND TAME PRODUCTION

TABLE 13.2.2 Utilities for Ethermax Unit Producing MTBE and TAME (including SHP)

Utilities	Ethermax for MTBE	Ethermax for TAME
Electric power, kWh	177	277
Steam, MT/h (klb/h):		
Low-pressure	—	2.7 (6.0)
Medium-pressure	7.9 (17.4)	11.1 (24.5)
Condensate,* MT/h (klb/h)	7.9 (17.4)	13.8 (30.5)
Cooling water, m^3/h (gal/min)	52 (227)	119 (524)
Fuel gas,* million kcal/h (million Btu/h)	—	0.4 (1.5)

*Denotes export.
Note: MT/h = metric tons per hour.

Downloaded from Digital Engineering Library @ McGraw-Hill (www.digitalengineeringlibrary.com)
Copyright © 2004 The McGraw-Hill Companies. All rights reserved.
Any use is subject to the Terms of Use as given at the website.

Source: HANDBOOK OF PETROLEUM REFINING PROCESSES

CHAPTER 13.3
UOP OLEFIN ISOMERIZATION

Steve Krupa
UOP LLC
Des Plaines, Illinois

INTRODUCTION

UOP developed olefin isomerization catalysts and process technology primarily for use in a fuel ethers complex where methyl tertiary butyl ether (MTBE) or tertiary amyl methyl ether (TAME) is the desired product. These ethers are reaction products from isoolefins while normal olefins are not reactive. Olefin isomerization significantly increases ether production since feedstocks typically have more nC_4= than iC_4=.

While presented here integrated in an ethers complex, UOP's olefin isomerization processes can be used in any other application where conversion of normal olefins to branched olefins is needed or desirable.

The idea of skeletal isomerization of normal olefins to isoolefins is not new. During the 1960s, UOP scientists, as well as others, worked on catalyst development based on chlorided alumina. However, these previous catalyst systems were not attractive because they showed poor stability and low selectivity. The increasing demand for oxygenates has resulted in a higher demand for isobutylene and isoamylene to be used in ether production. UOP began active research in 1989 for a skeletal olefin isomerization catalyst. The timing of this demand was fortunate because of the emergence of a number of new catalytic materials. The challenge was to develop a catalyst with high selectivity and stability. With its unique expertise in the development of new materials, UOP developed a proprietary catalyst for skeletal isomerization of light normal olefins. The catalyst was further improved and then successfully produced in a commercial-scale manufacturing trial run.

DESCRIPTION OF THE PENTESOM PROCESS

The UOP* Pentesom* process isomerizes normal C_5 olefins to reactive isoamylene for conversion to TAME. This unit, coupled with an ethers unit, such as the Ethermax* process (Chap. 13.2), maximizes the production of TAME derived from fluid catalytic cracking (FCC) unit C_5 olefins. The high-conversion Pentesom unit normally can increase the

*Trademark and/or service mark of UOP.

Downloaded from Digital Engineering Library @ McGraw-Hill (www.digitalengineeringlibrary.com)
Copyright © 2004 The McGraw-Hill Companies. All rights reserved.
Any use is subject to the Terms of Use as given at the website.

UOP OLEFIN ISOMERIZATION

TAME production from an FCC unit by 1.7 times that of the stand-alone TAME Ethermax unit. The Pentesom-Ethermax flow scheme consumes more than 80 percent of the available C_5 olefins in a typical FCC feed stream. This consumption compares to only about 50 percent C_5 olefin utilization with stand-alone TAME production.

UOP's analysis has shown that, in most cases, operating the Pentesom unit on a once-through basis by adding a second Ethermax unit downstream of the Pentesom unit is preferable to recycling the Pentesom effluent to a single Ethermax unit. The block flow diagram of this flow scheme is shown in Fig. 13.3.1.

The primary benefit of this flow scheme is a savings in utilities. The FCC unit has a substantial amount of saturate unreactive C_5s contained with the C_5 olefins. When the Ethermax-Pentesom units are operated in a recycle mode, the resulting buildup of normal paraffins consumes both utilities and capacity that are not directed toward TAME production. The normal paraffins must be purged from the recycle loop by a bleed, which also results in a loss of normal pentenes from TAME production. Operation in a once-through flow scheme eliminates these concerns.

Pentesom Process Flow

The Pentesom flow scheme consists of a single reactor containing a high-activity molecular-sieve-based catalyst (Fig. 13.3.2). The Ethermax effluent passes through a fired heater and is combined with a small amount of hydrogen before entering the single, fixed-bed Pentesom reactor. The reactor effluent is cooled and condensed before entering a separator. The separator overhead stream, which is rich in hydrogen, is compressed and recycled to the Pentesom reactor. A small amount of makeup hydrogen is added to the recycle stream. Separator bottoms are routed to a stripper. Stripper bottoms are sent to a second Ethermax unit for additional TAME production.

No feed pretreatment other than that required for the Ethermax unit is required for the Pentesom process. The catalyst operates for 1 year between regenerations. The regeneration is normally conducted in situ using the existing process equipment. No additional regeneration equipment is needed.

DESCRIPTION OF THE BUTESOM PROCESS

The Butesom* process is UOP's C_4 olefin isomerization process. The process isomerizes normal butenes to isobutylene, which can then be further converted to MTBE. The

*Trademark and/or service mark of UOP.

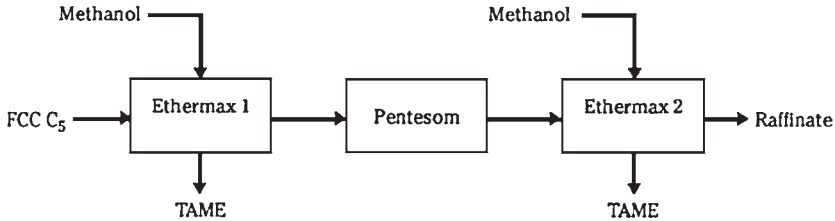

FIGURE 13.3.1 Typical FCCU C_5 processing scheme.

Downloaded from Digital Engineering Library @ McGraw-Hill (www.digitalengineeringlibrary.com)
Copyright © 2004 The McGraw-Hill Companies. All rights reserved.
Any use is subject to the Terms of Use as given at the website.

UOP OLEFIN ISOMERIZATION

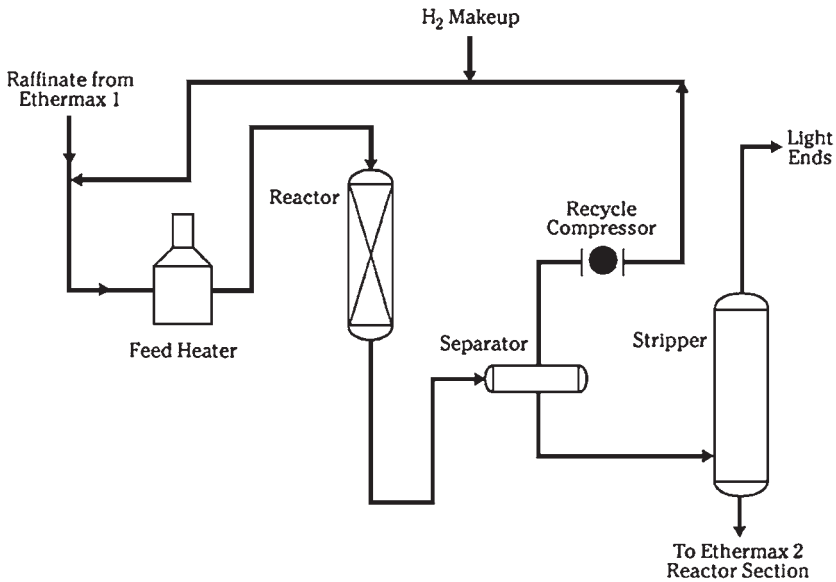

FIGURE 13.3.2 UOP Pentesom process.

Butesom unit is operated in a recycle mode with an ethers unit, such as UOP's Ethermax process (Chap. 13.2), for MTBE production.

The Butesom-Ethermax flow scheme is targeted for streams rich in C_4 olefins and low in paraffins. Such a stream is that available from naphtha-based steam crackers. In these situations, the raffinate is typically a relatively low-value product because no other conversion processes are available. The olefin utilization for MTBE in these cases is typically less than 30 percent. The Butesom-Ethermax flow scheme increases olefin utilization to 80 percent.

The feedstock from the FCC unit contains a high saturate C_4 concentration, which is normally not a good fit for a Butesom unit. The primary reason that the Butesom unit is more effective on high-olefin feedstocks is that the conversion of normal butene to isobutylene is equilibrium-limited to 40 to 50 percent under normal operating conditions. A recycle operation is used to achieve higher overall conversion of *n*-butene above the equilibrium limit. However, the high paraffin concentrations present in FCC feedstocks require a substantial bleed on the recycle loop to purge the paraffins. The recycle bleed drags butenes out of the flow scheme, thereby reducing the availability of butenes for conversion to MTBE.

Butesom Process Flow

A simplified Butesom flow scheme is shown in Fig. 13.3.3. This simple unit uses a molecular-sieve-based catalyst and swing reactors. The Ethermax effluent passes through a combined feed exchanger and fired heater before entering one of the swing fixed-bed Butesom reactors. The reactors are operated in a swing mode with one reactor on-line and the other in regeneration. The reactor effluent is exchanged with the fresh feed in the combined feed exchanger and cooled before being compressed and condensed in the effluent compressor system. The liquid is then pumped back to the Ethermax unit for conversion to

Downloaded from Digital Engineering Library @ McGraw-Hill (www.digitalengineeringlibrary.com)
Copyright © 2004 The McGraw-Hill Companies. All rights reserved.
Any use is subject to the Terms of Use as given at the website.

UOP OLEFIN ISOMERIZATION

MTBE. The small amount of light ends produced in the Butesom unit are removed in the Ethermax unit.

Regeneration Section

Unlike the UOP C_5 skeletal isomerization system, all C_4 skeletal isomerization catalyst systems have limited stability and require frequent regenerations. During the process cycle, a progressive accumulation of coke on the catalyst occurs. If the process cycle were extended significantly without regeneration, the coke deposited would cause a gradual decrease in catalyst performance. Therefore, the regeneration step is critical to the overall process economics. The Butesom process provides a regeneration system that is simple and low-cost. The regeneration consists of a simple carbon burn to remove the coke on the catalyst. Because the burn is conducted in the reactor, less regeneration equipment is required. Consequently, the valving and maintenance problems associated with moving catalyst are eliminated.

The regeneration sequence is as follows:

- Reactor isolation
- Evacuation and N_2 pressure-up
- Carbon burn
- Evacuation and N_2 pressure-up
- Reactor on-line

The evacuation and pressure-up steps are accomplished by a common single-stage steam ejector. Purge gas is minimized by designing the system so that only the reactor itself needs to go through the evacuation and purge steps. The carbon burn is the only catalyst regeneration step required to restore the catalyst activity; no promoters or special activators are used on or with the catalyst. The carbon burn is controlled simply by regu-

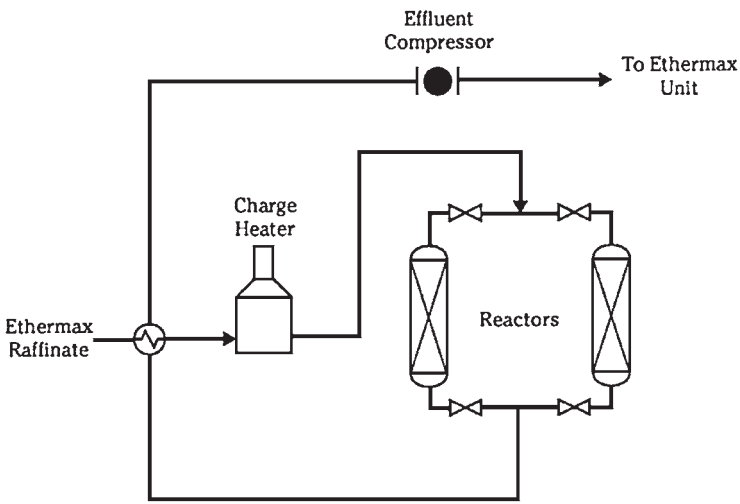

FIGURE 13.3.3 UOP Butesom process.

Downloaded from Digital Engineering Library @ McGraw-Hill (www.digitalengineeringlibrary.com)
Copyright © 2004 The McGraw-Hill Companies. All rights reserved.
Any use is subject to the Terms of Use as given at the website.

UOP OLEFIN ISOMERIZATION

lating the oxygen content and temperature in the burn zone. Utility air is used as the oxygen source. No costly dryers or special utilities are required.

ECONOMICS

The Pentesom-Ethermax process flow scheme increases the typical FCC TAME production by about 1.7 times compared to a stand-alone Ethermax unit for TAME production. The capital cost for an Ethermax-Pentesom-Ethermax complex built on the U.S. Gulf Coast in 1995 and producing 103,000 metric tons per year (MTA) [2500 barrels per day (BPD)] of TAME from FCC-derived feed is approximately $21 million U.S.

A Butesom-Ethermax complex processing an FCC feedstock can typically produce about 1.7 times the production of a stand-alone Ethermax unit. The estimated 1995 U.S. Gulf Coast erected cost for a complex to produce 86,800 MTA (2200 BPD) of MTBE is $23 million U.S.

COMMERCIAL EXPERIENCE

The Butesom and Pentesom processes are offered for commercial license. The catalyst systems used in the Pentesom and Butesom processes were under development for almost 5 years. Pilot-plant tests included process variable studies as well as contaminant studies. The catalyst was tested under commercial conditions and exposed to multiple regeneration cycles. A commercial manufacturing test run was successfully conducted. The equipment and operating conditions for the Butesom and Pentesom processes were well within the normal refining engineering boundaries. The Butesom and Pentesom designs draw on the expertise gained in these commercial runs as well as on the experience gained in more than 80 years of process commercialization.

Downloaded from Digital Engineering Library @ McGraw-Hill (www.digitalengineeringlibrary.com)
Copyright © 2004 The McGraw-Hill Companies. All rights reserved.
Any use is subject to the Terms of Use as given at the website.

Downloaded from Digital Engineering Library @ McGraw-Hill (www.digitalengineeringlibrary.com)
Copyright © 2004 The McGraw-Hill Companies. All rights reserved.
Any use is subject to the Terms of Use as given at the website.

Source: HANDBOOK OF PETROLEUM REFINING PROCESSES

CHAPTER 13.4
OXYPRO PROCESS

Steve Krupa, Larry Richardson, and Jill Meister
UOP LLC
Des Plaines, Illinois

PROCESS DESCRIPTION

The UOP* Oxypro* process is a unique, low-cost, refinery-based catalytic process for the production of di-isopropyl ether (DIPE) from propylene and water. The ether DIPE has high octane, low vapor pressure, and excellent gasoline blending properties.

The Oxypro process is especially well suited for processing propylene derived from the fluid catalytic cracking (FCC) unit within the refinery. After amine and Merox* treating, the FCC-derived propylene is fed directly along with water to the Oxypro process. The propylene and water are converted to DIPE at more than 98 wt % selectivity. The Oxypro product has a purity of more than 98 wt % DIPE and a research octane number clear (RONC) and motor octane number clear (MONC) that are comparable to other ethers, such as MTBE and TAME.

The Oxypro product shows a clear octane advantage over both catalytic polymerization and alkylation of propylene. DIPE from the Oxypro process generates 112 RONC and 98 MONC compared to only 90 RONC and 89 MONC for C_3 alkylate and 93 RONC and 82 MONC for catalytic polymerization gasoline. The combination of high-octane product and near 100 percent overall conversion gives the Oxypro process superior performance compared to other refinery C_3 alternatives.

PROCESS FLOW SCHEME

A simplified flow scheme of the Oxypro process is shown in Fig. 13.4.1. The amine- and Merox-treated mixed-C_3 stream from the FCC unit enters the unit and is mixed with make-up water and internal recycle streams of propylene, isopropyl alcohol (IPA), and water. The combined streams are processed downflow in a fixed-bed reactor. The reactor effluent is sent to fractionation, where the light ends and propane are removed. The propane product meets typical liquefied petroleum gas (LPG) specifications of less than 5 wt % propylene. The fractionation product is then sent to product recovery, where water, IPA, and DIPE are

*Trademark and/or service mark of UOP.

Downloaded from Digital Engineering Library @ McGraw-Hill (www.digitalengineeringlibrary.com)
Copyright © 2004 The McGraw-Hill Companies. All rights reserved.
Any use is subject to the Terms of Use as given at the website.

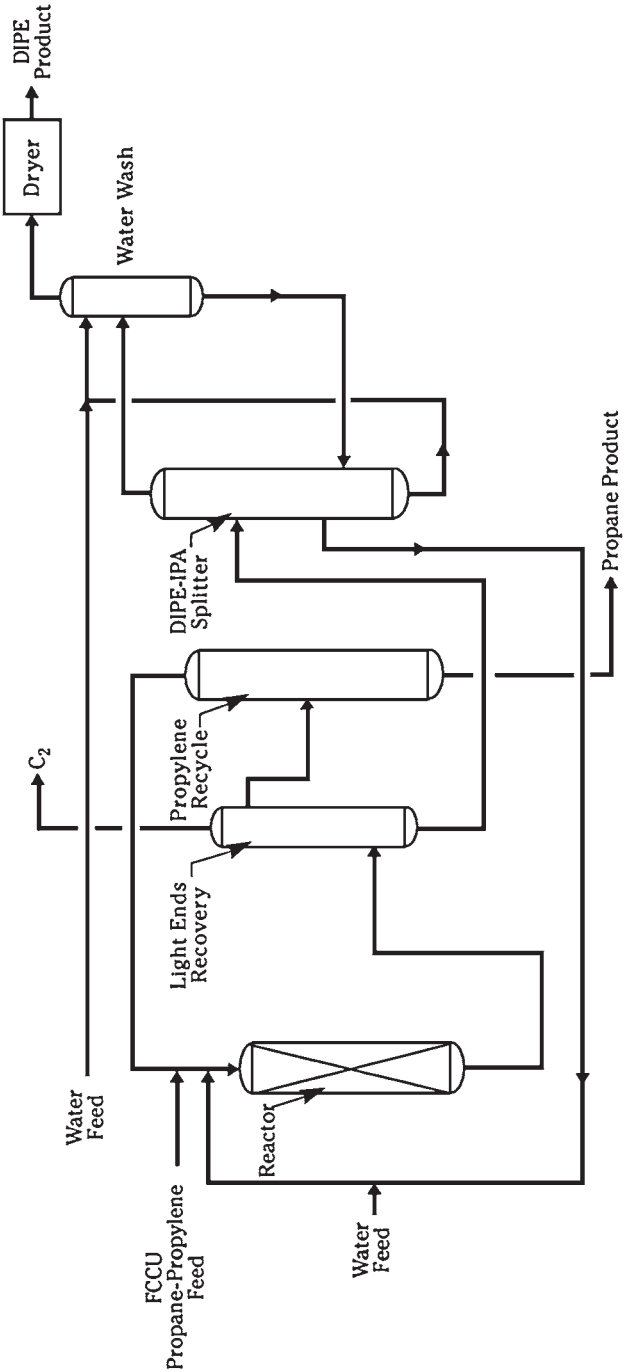

FIGURE 13.4.1 Oxypro flow scheme.

Downloaded from Digital Engineering Library @ McGraw-Hill (www.digitalengineeringlibrary.com)
Copyright © 2004 The McGraw-Hill Companies. All rights reserved.
Any use is subject to the Terms of Use as given at the website.

OXYPRO PROCESS

separated. The IPA and water are recycled to the reactor to maximize DIPE production. The DIPE product has a purity of more than 98 wt %.

YIELDS

The yields from an Oxypro unit designed to produce 96,000 metric tons per year (MTA) [2500 barrels per day (BPD)] of DIPE product are shown in Table 13.4.1. The feedstock used to generate these yields is representative of a mixed propane-propylene stream from an FCC after amine and Merox treating. Specifications typical for an Oxypro unit DIPE product are shown in Table 13.4.2.

OPERATING COSTS AND ECONOMICS

The estimated inside-battery-limits erected cost of an Oxypro unit built on the U.S. Gulf Coast in 2002 with a capacity to produce 88,500 MTA (2300 BPD) of DIPE is about $26 million. Utility requirements for this unit are given in Table 13.4.3.

TABLE 13.4.1 Oxypro Unit Yield Summary

	BPSD	kg/h
Feed:		
Propylene	2,918	10,050
Propane	1,239	4,100
H_2O	328	2,170
Product:		
LPG	1,300	4,310
DIPE	2,500	12,010

Note: BPSD = barrels per stream-day.

TABLE 13.4.2 Typical Oxypro Unit Product Specifications

Specific gravity	0.73
DIPE, wt %	98
Water, wt ppm	<100
IPA, wt %	<0.5
C_6+, wt %	<2
Octane:	
RONC	112
MONC	98

Downloaded from Digital Engineering Library @ McGraw-Hill (www.digitalengineeringlibrary.com)
Copyright © 2004 The McGraw-Hill Companies. All rights reserved.
Any use is subject to the Terms of Use as given at the website.

OXYPRO PROCESS

TABLE 13.4.3 Operating Utility Requirements

Power, kWh	537
Steam, MT/h (klb/h):	
Low-pressure	11.3 (24.9)
High-pressure	8.7 (19.1)
Cooling water, m^3/h (gal/min)	336 (1,437)

Note: MT/h = metric tons per hour.

COMMERCIAL EXPERIENCE

Construction of the first Oxypro unit was completed in mid-2002. The Oxypro process equipment and operating conditions are well within normal refinery boundaries with low process temperatures and reactor pressures similar to hydrotreating units. The reaction chemistry is similar to that of MTBE, ETBE, and TAME ethers units. UOP has designed and licensed more than 700 hydrotreaters and more than 40 MTBE, ETBE, and TAME units. (See Chaps. 13.1 and 13.2.) The Oxypro process draws on the expertise of these designs as well as on experience gained in more than 80 years of UOP process commercialization.

Downloaded from Digital Engineering Library @ McGraw-Hill (www.digitalengineeringlibrary.com)
Copyright © 2004 The McGraw-Hill Companies. All rights reserved.
Any use is subject to the Terms of Use as given at the website.

Source: HANDBOOK OF PETROLEUM REFINING PROCESSES

P · A · R · T · 14

HYDROGEN PROCESSING

Downloaded from Digital Engineering Library @ McGraw-Hill (www.digitalengineeringlibrary.com)
Copyright © 2004 The McGraw-Hill Companies. All rights reserved.
Any use is subject to the Terms of Use as given at the website.

Downloaded from Digital Engineering Library @ McGraw-Hill (www.digitalengineeringlibrary.com)
Copyright © 2004 The McGraw-Hill Companies. All rights reserved.
Any use is subject to the Terms of Use as given at the website.

Source: HANDBOOK OF PETROLEUM REFINING PROCESSES

CHAPTER 14.1
HYDROGEN PROCESSING

Alan G. Bridge*
ChevronTexaco Research and Technology Company
Richmond, California

Gary L. Hamilton
Chevron Lummus Global LLC
Bloomfield, New Jersey

INTRODUCTION

A Historical Perspective

This chapter provides a historic perspective of the importance of hydrogen processing in the refining industry. The technologies referred to in this chapter are dealt with in greater detail in the respective technology chapters.

The potential for applying hydrogenation reactions within the refining industry has been known since the early years of the twentieth century. In October 1930 the American Chemical Society conducted a symposium in Cincinnati on the subject of "Industrial High-Pressure Reactions." In one of the papers, Haslam and Russell[37] discussed the five adaptations of hydrogenation which appeared to be of the most immediate importance. Figure 14.1.1 is a copy of the page on which they summarized these five adaptations.

Horne and McAfee[41] in 1958 noted that of these five, the second, third, and fourth were already being practiced, and they predicted that the first and fifth would also soon be commercialized. They were right. Such reactions are now commonplace in modern refineries, largely because of the plentiful supply of hydrogen produced either in catalytic reformers or from inexpensive sources of natural gas.

The modern version of distillate hydrocracking was introduced in the United States in the 1960s to convert excess fuel oil to predominantly motor gasoline and some jet fuel. Fluid catalytic cracking (FCC) cycle oils were popular feedstocks at first. The process was then used to upgrade the liquids produced in delayed and fluid coking and solvent deasphalting. While these residuum conversion schemes were being implemented, a demand for low-sulfur fuel oil (LSFO) developed and fixed-bed residuum hydrotreating was commercialized. As LSFO demand declined, these hydrotreaters were used to prepare feed for FCC units. On-stream catalyst replacement technology has been commercially successful in extending the capabilities of fixed-bed residuum hydrotreaters. Ebullating-bed hydrocrackers have now found

*Deceased.

Downloaded from Digital Engineering Library @ McGraw-Hill (www.digitalengineeringlibrary.com)
Copyright © 2004 The McGraw-Hill Companies. All rights reserved.
Any use is subject to the Terms of Use as given at the website.

HYDROGEN PROCESSING

1030 INDUSTRIAL AND ENGINEERING CHEMISTRY Vol. 22, No. 10

INDUSTRIAL HIGH-PRESSURE REACTIONS

Presented before a joint session of the Divisions of Industrial and Engineering Chemistry, Gas and Fuel Chemistry, and Petroleum Chemistry at the 80th Meeting of the American Chemical Society, Cincinnati, Ohio, September 8 to 12, 1930

Introduction

THE decision of the AMERICAN CHEMICAL SOCIETY to conduct a symposium on "Industrial High-Pressure Reactions" is timely. To my mind it gives recognition to one of the most important developments in American chemical industry since the war. The coöperation of three such large divisions of the SOCIETY as Industrial and Engineering, Petroleum, and Gas and Fuel is evidence of the wide interest and appeal of this subject.

The tremendous growth of industries based on high-pressure reactions is the most startling development of the decade. Synthetic ammonia is now one of our largest heavy-chemical industries. Synthetic-methanol production is mounting rapidly and oil hydrogenation promises to place the petroleum industry on a better economic basis and bring it into closer contact with more strictly chemical industries. Synthetic phenol and a host of similar miscellaneous developments promise much for the expansion and improvement of existing processes. The industrial chemist of today faces greater opportunity for exploration and accomplishment than ever before.

Not the least of the difficulties met in organizing a symposium such as this is a direct consequence of the novelty of the subject and the present rapid growth and development of processes based on high-pressure technic. The keen industrial competition existing and the comparatively limited number of laboratories from which to solicit contributions combine to enhance the difficulties. The fact that we have been able to secure such an impressive list of papers is a tribute to a developing spirit of coöperation in industrial, government, and university laboratories.

NORMAN W. KRASE, *Chairman*

Hydrogenation of Petroleum[1]

R. T. Haslam[2] and R. P. Russell[3]

STANDARD OIL DEVELOPMENT COMPANY AND HYDRO ENGINEERING & CHEMICAL COMPANY, ELIZABETH, N. J.

This paper deals with some of the recent developments in the hydrogenation of petroleum; and shows the adaptability of the process for converting fuel oil to gasoline and gas oil, increasing the paraffinic nature of kerosenes, burning oils, and lubricants; and discusses the reverse possibility of producing non-paraffinic gasoline. There is pointed out the flexibility of the process, particularly with respect to changes in the characteristics of the product, the handling of a wide variety of charging stock, the elimination of all forms of sulfur, and the conversion of all asphalts to distillate fuels.

THE conditions under which commercial hydrogenation has been practiced since the time of Sabatier have been restricted until the last few years to the use of (1) hydrogen at substantially normal pressure or 2 or 3 atmospheres above normal; (2) hydrogen of a high degree of purity particularly with respect to such catalyst poisons as sulfur, arsenic, and the like; (3) powerful but sensitive catalysts of the type of reduced nickel; and (4) temperatures safely below those at which thermal decomposition of the stock to be hydrogenated takes place. Coal and oil, both always containing sulfur, were not amenable to this type of hydrogenation, and it was therefore restricted to animal and vegetable fats and oils. By eliminating the catalyst and substituting hydrogen pressures one hundred fold greater than had previously been used, a high degree of liquefaction was obtained, but the oils thus produced contained relatively large percentages of oxygenated bodies of the cresolic type, making the oils hard to crack or refine. The able and resourceful research organization of the I. G. Farbenindustrie, through their experimentation, recognized the need of greater hydrogenation intensity than obtainable with hydrogen pressures then commercially permissible and developed a line of sulfur-resistant catalysts which materially speeded up hydrogenation and caused the elimination of all the oxygen from the hydrogenated product. In addition, their long experience in the field of synthetic ammonia enabled them to devise apparatus and methods for better carrying out this type of hydrogenation in a continuous manner.

There are five adaptations of hydrogenation which appear to be of most immediate importance in oil refining. These are:

(1) The conversion of heavy, high-sulfur, asphaltic crude oils and refinery residues into gasoline and distillates low in sulfur and free from asphalt, without concurrent formation of coke.

(2) The alteration of low-grade lubricating distillates, to obtain high yields of lubricating oils of premium quality as to temperature-viscosity relationship, Conradson carbon, flash, and gravity.

(3) The conversion of off-color, inferior-burning oil distillates or light gas oils into high-gravity, low-sulfur, water-white burning oils of excellent burning characteristics, with gasoline being the only other product except for a slight gas formation.

(4) The desulfurization and color- and gum-stabilization of high-sulfur, badly gumming cracked naphthas without marked alteration in distillation range and without major loss in antiknock value. (It is possible to operate so as actually to better the antiknock quality.)

(5) The conversion of paraffinic gas oils into low-sulfur, gum- and color-stable, good antiknock gasolines without the production of coke or heavy product.

[1] Received September 11, 1930.

[2] Vice president and general manager, Standard Oil Development Co.

[3] General manager, Hydro Engineering & Chemical Co.

FIGURE 14.1.1 Early uses of hydroprocessing.

Downloaded from Digital Engineering Library @ McGraw-Hill (www.digitalengineeringlibrary.com)
Copyright © 2004 The McGraw-Hill Companies. All rights reserved.
Any use is subject to the Terms of Use as given at the website.

HYDROGEN PROCESSING

wide commercial application to processing various types of residues containing high levels of contaminants such as sulfur, nitrogen, metals, and asphaltenes.

Since the early distillate hydrocrackers were built, the demand for motor gasoline has not grown as quickly as that for middle distillates. The more recent hydrocracking units have been designed, therefore, to make good-quality kerosene and diesel fuel. Besides this trend, hydrocracking is steadily replacing conventional extraction processes in lube oil base stock manufacture because it can produce much more valuable by-products than the older process. The introduction of Chevron's ISODEWAXING and hydrofinishing process in conjunction with lube ISOCRACKING gave refiners the opportunity to produce high-quality base oils with viscosity indexes greater than 120.

Our understanding of the basic reactions, catalyst development and selection, and the subtleties of applying hydroprocessing to various applications has advanced considerably; and hundreds of technical articles have been written on the subject. This chapter summarizes the current understanding. By reviewing the literature references, the reader can explore the background of the subject in greater depth. Emphasis will be placed on the hydroprocessing of middle distillate and heavier feedstocks, since this is the field that has seen most of the advances.

For clarity, throughout the chapter we will use the term *hydroprocessing* to describe all the different processes in which hydrocarbons react with hydrogen. *Hydrotreating* will be used to describe those hydroprocesses dealing predominantly with impurity removal from the hydrocarbon feedstock. *Hydrocracking* will be used to describe those hydroprocesses that accomplish a significant conversion of the hydrocarbon feedstock to lower-boiling products.

Hydroprocessing Objectives

Hydroprocessing feedstocks—naphthas, atmospheric gas oils, vacuum gas oils (VGOs), and residuum—have widely different boiling character. Within each of these different boiling ranges exist a variety of molecular types. This depends on both the crude oil source and whether the material was produced in a cracking reaction or as a straight-run component of the original crude oil. The impurity levels in a variety of crude oils and in their vacuum residua are shown in Table 14.1.1. The vacuum residuum is the lowest-value fraction in the crude oil. Historically it has been blended into heavy fuel oil. The demand for this product, however, has not kept pace with the tremendous increase in demand for transportation fuels. Environment pressures have widened this gap by restricting the use of high-sulfur fuel oil while mandating cleaner light products. The products into which the refiner must convert the bottom of the barrel are summarized in Table 14.1.2.

The introduction of residuum hydroprocessing in the 1960s was a response to an increasing demand for LSFO to replace the high-sulfur heavy fuel. Over the years the increased demand for light products has focused attention on converting residuum to higher-value products. Products from residuum hydrotreating are often fed to a fluid catalytic cracking unit to produce good-quality motor gasoline. In this case the removal of nitrogen, Conradson carbon, and metal contaminants in the hydrotreater is just as important as sulfur removal. Hydroprocessing feedstocks which boil in the 650 to 1050°F VGO range can be straight-run stocks or stocks produced in cokers, thermal crackers, visbreakers, or other VGO boiling-range materials produced from residue conversion units. Again these are often processed to produce either LSFO or FCC feed. Sometimes they are hydrocracked to produce diesel, kerosene jet fuel, and/or naphtha. The hydrocracked heavy products are also excellent ethylene plant feedstocks or lube oil base stocks (when produced from the hydroprocessing of straight-run feedstocks) because the process removes the less desirable heavy aromatics.

Downloaded from Digital Engineering Library @ McGraw-Hill (www.digitalengineeringlibrary.com)
Copyright © 2004 The McGraw-Hill Companies. All rights reserved.
Any use is subject to the Terms of Use as given at the website.

TABLE 14.1.1 Inspections of Crude Oils and Vacuum Residua

Source	Arabian Light	Arabian Heavy	Kuwait	Iranian Heavy	Sumatran Light	Venezuelan	Alaskan North Slope	North Sea Ninian	California
Crude oil:									
Density, °API	33.3	28.1	31.3	30.8	35.3	33.3	26.3	35.1	20.9
Sulfur, wt %	1.8	2.9	2.5	1.6	0.07	1.2	1.0	0.41	0.94
Nitrogen, wt %	0.16	0.19	0.09	0.18	0.08	0.12	0.22	0.07	0.56
Residuum, 1000°F+ (538°C+):									
Yield, LV %	17.3	28.6	24.8	21.8	24.4	21.2	23.0	17.8	26.1
Density, °API	8.0	4.6	7.4	6.3	20.1	10.9	7.4	13.0	5.4
Sulfur, wt %	3.7	5.6	5.1	3.2	0.18	2.8	2.1	1.3	1.6
Nitrogen, wt %	0.49	0.67	0.38	0.83	0.33	0.56	0.64	0.42	1.33
Asphaltenes, wt %	11.3	20.6	12.0	14.7	7.9	16.0	8.1	6.9	12.0
Nickel + vanadium, ppm	96	220	116	462	41	666	130	28	294
Iron, ppm	—	10	0.9	9	13	5	15	<1	90

Downloaded from Digital Engineering Library @ McGraw-Hill (www.digitalengineeringlibrary.com)
Copyright © 2004 The McGraw-Hill Companies. All rights reserved.
Any use is subject to the Terms of Use as given at the website.

HYDROGEN PROCESSING

TABLE 14.1.2 Hydroprocessing Objectives

Feedstocks	Desired products	Process objectives
Naphthas	Catalytic reformer feed	Removal of S, N, olefins
	LPG	Hydrocracking
Atmospheric gas oils	Diesel	Removal of S, aromatics, and *n*-paraffins
	Jet	Removal of S, aromatics
	Ethylene feedstock	Removal of aromatics
	Naphtha	Hydrocracking
Vacuum gas oils	LSFO	Removal of S
	FCC feed	Removal of S, N, metals
	Diesel	Removal of S, aromatics
		Hydrocracking
	Kerosene/jet	Removal of S, aromatics
		Hydrocracking
	Naphtha	Hydrocracking
	LPG	Hydrocracking
	Ethylene feedstock	Removal of aromatics
		Hydrocracking
	Lube oil base stock	Removal of S, N, aromatics
		Hydrocracking
Residuum	LSFO	Removal of S
	FCC feedstock	Removal of S, N, CCR, and metals
	Coker feedstock	Removal of S, CCR, and metals
	Diesel	Hydrocracking

Note: LPG = liquefied petroleum gas; *n* = normal form; CCR = Conradson carbon residue; S = sulfur; N = nitrogen.

Straight-run or cracked stocks boiling in the atmospheric gas oil range can be hydrotreated to produce good-quality diesel and jet or ethylene plant feedstock. They can be hydrocracked to produce a naphtha which is an excellent feed for a catalytic reformer. Straight-run or cracked naphthas need to be hydrotreated to remove olefins, sulfur, and nitrogen to produce good catalytic reformer feeds. They can also be hydrocracked to give LPG.

The technical challenge associated with producing these products via hydroprocessing can be illustrated with the use of a chart first proposed by Bruce Stangeland at Chevron Research and since developed by many of his colleagues.[10,12,17,69,76,91] This relates the hydrogen content of a hydrocarbon to its molecular weight. Figure 14.1.2 is a Stangeland chart which shows the regions in which salable products fall. The upper boundary represents the hydrogen content of the paraffinic homologous series. No hydrocarbon exists above this line. The lower line represents aromatic compounds starting with benzene and including the condensed ring compounds, naphthalene, phenanthrene, pyrene, and coronene. These are among the most hydrogen-deficient compounds found in petroleum distillates. All the distillable hydrocarbons used in petroleum refining lie between these two extremes. Though not shown in Fig. 14.1.2, even the hydrocarbons present in the residuum—the nondistillable fraction—can easily be represented on this chart since the molecular weight scale goes up to 10,000, close to the maximum found in petroleum crude oil. Lines showing approximate boiling points have been drawn. These show the well-known fact that aromatic compounds have much lower molecular weights than paraffinic compounds of the same boiling point.

Specification products are shown as regions. Gary and Handwerk[29] described all the specifications of the major petroleum products. It is instructive to discuss the important ones with the aid of the Stangeland chart:

Downloaded from Digital Engineering Library @ McGraw-Hill (www.digitalengineeringlibrary.com)
Copyright © 2004 The McGraw-Hill Companies. All rights reserved.
Any use is subject to the Terms of Use as given at the website.

HYDROGEN PROCESSING

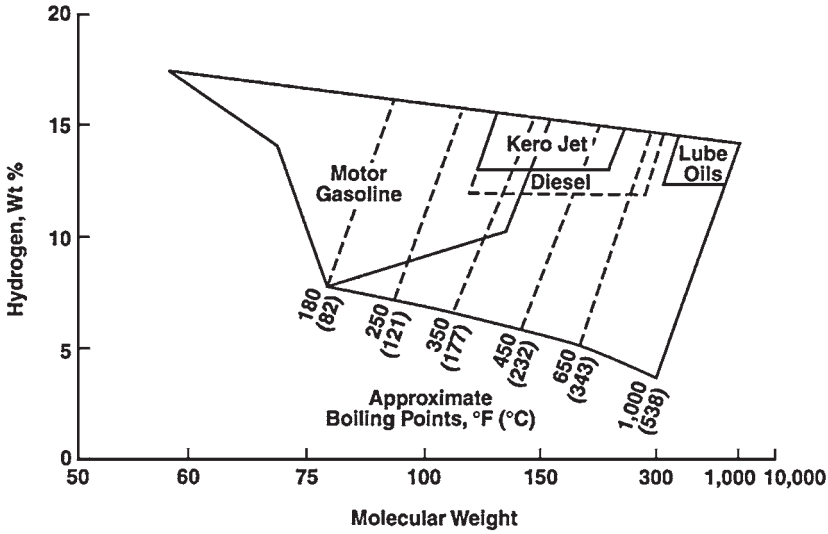

FIGURE 14.1.2 Hydrogen contents of refined products.

- *Motor gasoline.* This region is quite broad, since high octane numbers can be achieved with either high aromatic levels or high iso/normal paraffin ratios. Processes such as catalytic reforming focus on retaining aromatics, whereas isomerization processes convert normal paraffins to isoparaffins. The initial boiling character of motor gasoline is set by the Reid vapor pressure specification. The back end of the distillation specification is set by engine warm-up and crankcase dilution considerations. Sulfur and olefins content needs to be reduced to meet specific limitations.
- *Kerosene and aviation jet fuel (kero/jet).* To make these products with acceptably clean-burning characteristics, aromatic contents need to be low. The smoke point specification characterizes this quality. The front end of the distillation specification is set by flash point, the back end by freeze point.
- *Diesel fuels.* Here the burning quality is controlled by the cetane number specification which limits the aromatic content. The important cold flow properties are the pour point, cloud point, and cold filter plugging point; and one or more of these set the distillation endpoint and/or paraffins content. As with kero/jet, the front end of the distillation specification is set by flash point. Sulfur content and distillation (ASTM T95) specifications need to meet specific limitations.
- *Lube oils.* Aromatic compounds have very low viscosity indexes (VIs), so lube oils must, in general, have limited aromatic levels. Paraffin wax must also be minimized to achieve acceptable pour points, so the more desirable compounds are isoparaffins or molecules containing a combination of naphthenic rings and isoparaffinic side chains. The boiling range of lubricating oils is set by the desired viscosity. Sulfur content needs to be reduced to meet specific limitations.
- *Heating and fuel oils.* Hydrogen content is not as important for heating oils or residual fuel oils. However, hydroprocessing is often needed in their production in order to limit sulfur and nickel content. Their boiling range is set by flash point and viscosity considerations.

Downloaded from Digital Engineering Library @ McGraw-Hill (www.digitalengineeringlibrary.com)
Copyright © 2004 The McGraw-Hill Companies. All rights reserved.
Any use is subject to the Terms of Use as given at the website.

HYDROGEN PROCESSING

The Stangeland chart can be used to illustrate the differences between the feedstocks at the refiner's disposal and the required products. Figure 14.1.3 shows the region representing distillable cuts from typical petroleum crude oils. It compares the distillate products from two noncatalytic cracking processes—delayed coking and FCC. Neither of these processes consumes hydrogen, but both produce high yields of light products. The liquid products are deficient in hydrogen and need further hydroprocessing if they are to become transportation fuels. The light liquid products also contain substantial olefin levels, which can cause unstable products. This is generally true of thermal cracking conversion processes. Even residue hydroprocessing processes which convert residue to lighter products by utilizing a combination of hydrocracking, hydroprocessing, and thermal cracking produce light liquid products with somewhat lower hydrogen content than straight-run distillates, and therefore require some additional hydroprocessing to make finished products. Straight-run distillates are generally easier to upgrade to finished products.

The Stangeland chart oversimplifies a very complex situation. Modern techniques for characterizing the compounds present in petroleum stocks have helped in our understanding of hydroprocessing reactions, particularly the harmful effects of heavy aromatics. This is illustrated in data measured by M. F. Ali and coworkers[3] on VGOs from Arabian Heavy crude oil. These workers separated the 370 to 535°C distillate fraction into compound-class fractions. They then carried out an elemental analysis on the four major compound classes—saturates, monoaromatics, diaromatics, and polyaromatics. With molecular weights estimated from the other measured physical properties, these four compound classes have been plotted in Fig. 14.1.3. The point labeled P represents the polyaromatics naturally present in this VGO. This compound class represents 22.2 wt % of the total VGO and is more aromatic than either of the cracked stocks referred to previously. The sulfur content of the polyaromatics was reported as 9.83 percent, showing that three-quarters of the sulfur in VGO resides in the polyaromatics. Every polyaromatic molecule contains, on average, one sulfur atom. The other compound classes in this VGO are shown as points S, M, and D, representing saturates, monocyclics, and dicyclics, respectively. In recent years, considerable work has been done to characterize sulfur species and content relative to aromatics content and distillation of middle distillates such as AGO and cracked stocks. Such

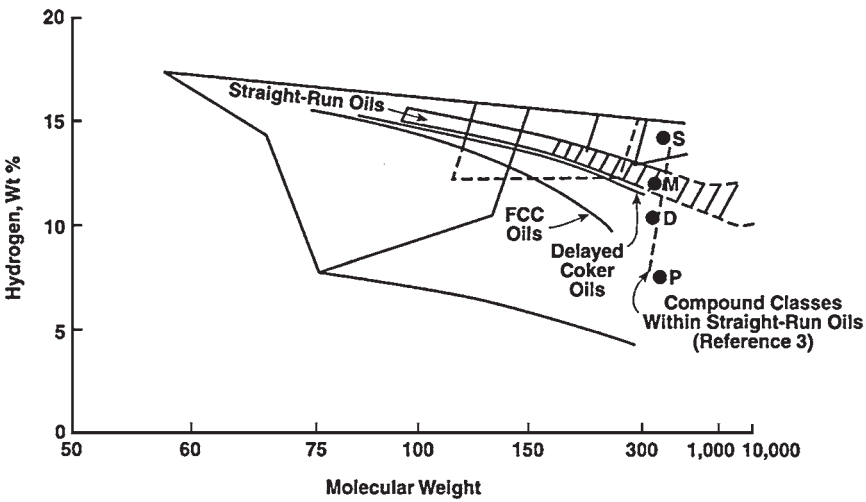

FIGURE 14.1.3 Hydrogen contents of potential feedstocks.

Downloaded from Digital Engineering Library @ McGraw-Hill (www.digitalengineeringlibrary.com)
Copyright © 2004 The McGraw-Hill Companies. All rights reserved.
Any use is subject to the Terms of Use as given at the website.

HYDROGEN PROCESSING

analysis confirms sulfur compound location and type, and the impact on hydroprocessing needs to affect sulfur reduction.

Boduszynski and Altgelt[8] pointed out that average molecular structure determinations for heavy oils give very little indication of the nature of the aromatics in the oil. These aromatics must be upgraded if salable products are to be made from such oils. The amount and character of polyaromatics have a profound effect on the ease of upgrading.

Most modern refineries produce transportation fuels from a blend of components made in different refining processes. Figure 14.1.4 shows the hydrogen content of a variety of diesel boiling-range products refined from Arabian crude oils. Components produced by hydrocracking have much higher hydrogen content than those produced in nonhydrogen processes. Figure 14.1.5 shows a rough correlation exists between jet fuel smoke point and hydrogen content. A 1 percent change in hydrogen content corresponds to a difference of 10 mm in smoke point in the range from 20 to 30 mm. Also consider the difference in hydrogen content between the components shown in Fig. 14.1.4. A 1 percent difference in hydrogen content here represents a difference of 700 standard cubic feet (SCF) of hydrogen consumed per barrel when upgrading to the same product specification. The refiner must decide where to invest the hydrogen in order to maximize product values while meeting changing product specifications that have generally included reduced sulfur content and improved quality, such as higher cetane and lower aromatics in the case of diesel fuels, lower olefins in gasoline, and increased stability of low-sulfur fuel oil. Each refinery is faced with a different situation, depending on processing capabilities, product markets, and changing regulations.

The Extent of Hydroprocessing

Of every barrel of crude oil currently refined worldwide, over 45 percent on average has historically received some hydroprocessing. This percentage continues to grow and varies with geographic area. Table 14.1.3 shows the crude refining capacity in each region, with the hydroprocessing capacity divided into three categories—hydrocracking, hydrorefining, and hydrotreating. This table divides hydroprocesses according to the amount of hydrogen consumed in them. Typical hydrocrackers consume between 1400 and 2400 standard cubic

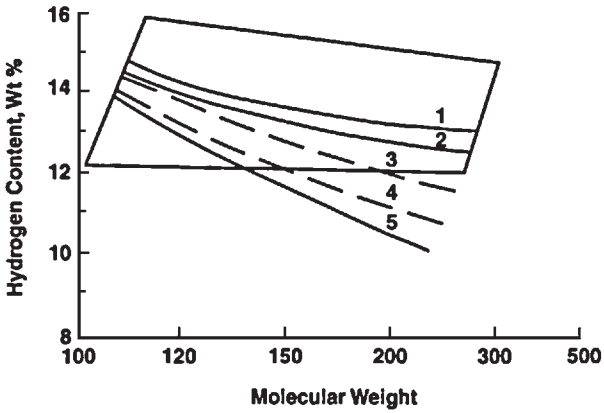

FIGURE 14.1.4 Hydrogen contents of middle distillates.[12] Solid boundaries show 250 to 700°F (121 to 371°C) diesel range. Process: (1) hydrocracker, (2) straight run, (3) delayed coker, (4) fluid coker, and (5) fluid catalytic cracker.

Downloaded from Digital Engineering Library @ McGraw-Hill (www.digitalengineeringlibrary.com)
Copyright © 2004 The McGraw-Hill Companies. All rights reserved.
Any use is subject to the Terms of Use as given at the website.

HYDROGEN PROCESSING

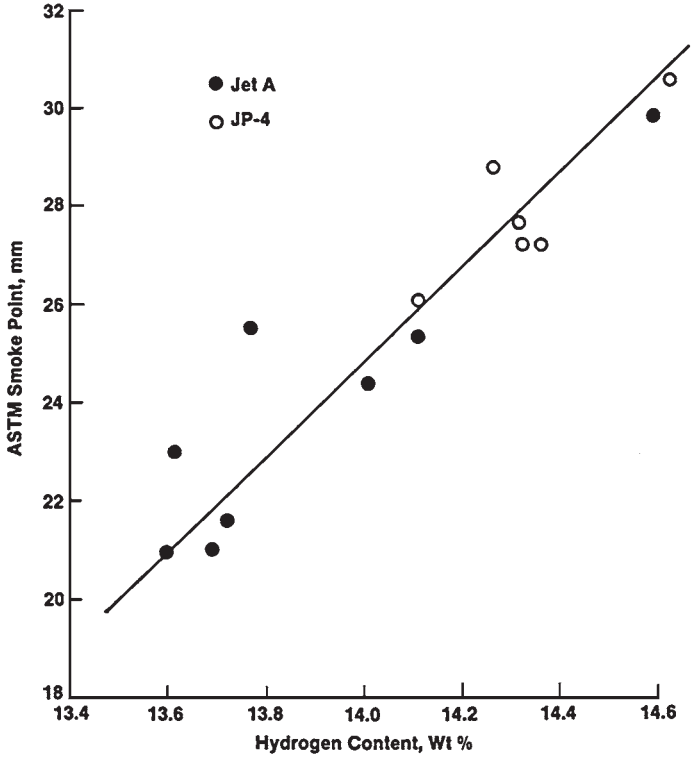

FIGURE 14.1.5 The relationship between kerosene smoke point and hydrogen content.

feet of hydrogen per barrel (SCFB). Naphtha hydrotreaters usually consume less than 200 SCFB, while hydrorefiners including residuum hydrotreaters typically consume between 500 and 1000 SCFB. Recent information indicates a considerable increase of installed hydroprocessing capacity driven by more stringent fuels specifications (i.e., reduced sulfur, etc.), and lower demand for residual fuel oil. An end-of-2001 survey of refiners indicates that worldwide hydroprocessing capacity has grown by 17 percent since 1994, and now represents about 50 percent of the crude capacity receiving some hydroprocessing.

North America uses the most hydroprocessing because residuum conversion is needed to achieve the high ratio of transportation fuels to fuel oil demanded by the market. While delayed coking has been a popular residuum conversion scheme, liquid products produced from it are hydrogen-deficient and, therefore, require further hydroprocessing. To produce salable light products, distillate hydrocracking has been widely installed because the proportion of jet fuel and naphtha can be varied to suit seasonal marketing demands. As defined in Table 14.1.3, 8.5 percent of the crude oil refined in North America is upgraded in a hydrocracker. This amount has increased and is expected to further increase as the requirements of producing clean transportation fuels will necessitate added capacity.

By contrast, in Japan many residuum and VGO hydrotreating units were installed in the 1960s and 1970s in order to produce LSFO to reduce air pollution from stationary power plants.

Downloaded from Digital Engineering Library @ McGraw-Hill (www.digitalengineeringlibrary.com)
Copyright © 2004 The McGraw-Hill Companies. All rights reserved.
Any use is subject to the Terms of Use as given at the website.

TABLE 14.1.3 The Geography of Hydroprocessing*

Region	Crude refining capacity, MBPD	Hydrocracking* capacity, MBPD	Hydrorefining† capacity, MBPD	Hydrotreating‡ capacity, MBPD	Hydrogen production capacity		
					Hydrogen plants, 10^6 SCFD	Catalytic reformers, § 10^6 SCFD	Total, 10^6 SCFD
North America	17,227	1,462	1,975	9,124	3,612	3,245	6,857
Asia/Pacific	14,626	508	2,289	3,497	1,278	1,555	2,833
Western Europe	13,499	619	1,881	5,136	1,941	1,382	3,323
CIS/Eastern Europe	12,800	57	157	3,410	1,373	191	1,564
Middle East	6,044	447	613	1,294	571	1,131	1,702
South/Central America	7,172	108	433	1,589	441	296	737
Africa	2,799	38	138	530	295	65	360

**Hydrocracking* includes distillate and residuum upgrading and lube oil manufacturing.
†*Hydrorefining* includes residuum and heavy oil desulfurization, FCC feed, cycle oil processing, and middle distillate processing.
‡*Hydrotreating* includes naphtha processing, atmospheric gas oil processing, and lube oil finishing.
§Assuming all catalytic reformers produce 900 SCF hydrogen/bbl of feed.
Note: BPD = barrels per day; SCFD 5 standard cubic feet per day; CIS = Commonwealth of Independent States.
Source: *Oil and Gas Journal,* Worldwide Refining issue, 1994.

Downloaded from Digital Engineering Library @ McGraw-Hill (www.digitalengineeringlibrary.com)
Copyright © 2004 The McGraw-Hill Companies. All rights reserved.
Any use is subject to the Terms of Use as given at the website.

HYDROGEN PROCESSING

Although the Middle East has less overall hydroprocessing than other regions, the Kuwait investment in hydrocracking is substantial; 52 percent of the crude oil refined in Kuwait is processed in a hydrocracker. Middle East hydrocrackers are designed to make middle distillates for export. They consume less hydrogen per barrel of feed than most of the North American distillate hydrocrackers, which are generally operated to produce naphtha and jet fuel.

The need for hydrocrackers in the rest of the world has continued to grow. It is instructive to look at the availability of hydrogen in the different regions (see Table 14.1.3). Assuming that catalytic reformers produce an average of 900 SCF of hydrogen per barrel of reformer feed and adding this quantity to the manufactured hydrogen capacity give a total amount of hydrogen available from these sources that is quite consistent with the hydroprocessing capacities shown in each region. The ratio of manufactured hydrogen to catalytic reformer hydrogen in the different regions varies with end-user needs. Increased hydroprocessing capacity installed over the past decade has resulted in increased installed capacity of catalytic reformers, hydrogen plants, and hydrogen purification facilities such as PSA and membrane in refineries.

The high price differential between heavy fuel oil and transportation fuels led to the introduction of sophisticated plants which consume large amounts of hydrogen—distillate hydrocrackers, residuum hydrocrackers, and residuum hydrotreaters. To support their appetite for hydrogen, large hydrogen manufacturing plants were installed. During periods when crude prices are low and differentials between heavy and light products are small, operation of residue hydroprocessing units may not always appear to be economically justified. However, such units afford the refiner improved crude flexibility and in many cases are required to meet lower-sulfur fuel oil needs.

Figure 14.1.6 shows the growth in capacity of these hydrocracking and residuum processes since Chevron commercialized the first modern distillate hydrocracker in 1958.

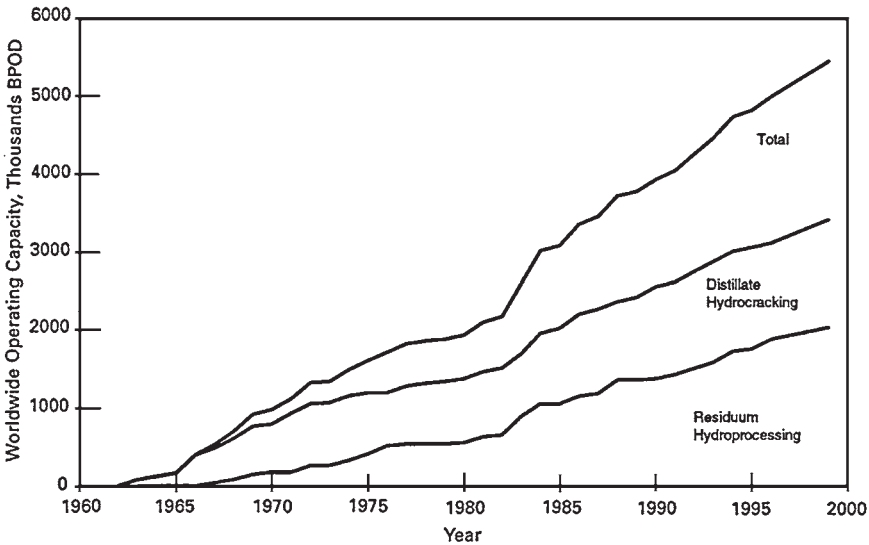

FIGURE 14.1.6 Growth in heavy oil hydroprocessing capacity.

Downloaded from Digital Engineering Library @ McGraw-Hill (www.digitalengineeringlibrary.com)
Copyright © 2004 The McGraw-Hill Companies. All rights reserved.
Any use is subject to the Terms of Use as given at the website.

HYDROGEN PROCESSING

PROCESS FUNDAMENTALS

Chemical Reactions

The impurities which are removed in hydrotreaters are largely concentrated in the aromatic compounds in the feedstocks. Their removal is accomplished therefore by the hydrogenation of these compounds. Simple examples are shown in Fig. 14.1.7. Note that in these examples sulfur is removed without complete saturation of the aromatic ring, whereas nitrogen removal generally involves saturation and destruction of the aromatic ring. Thus, hydrodesulfurization can be accomplished with low hydrogen consumption at low pressures, whereas nitrogen removal needs high hydrogen partial pressures and consumes more hydrogen. However, in order to produce ultralow sulfur product such as diesel, it is important of recognize that different reaction mechanisms are required, including sulfur removal via direct abstraction of the sulfur and sulfur removal via aromatic ring opening and saturation. Sterically hindered substituted dibenzothiophenes can dominate where very high level of desulfurization is required. This is particularly true of reactants boiling over 650°F and is even more pronounced with cracked feedstocks, especially highly aromatic FCC light cycle oils.

The reactions which occur in hydrocracking are much more complicated. Choudhary and Saraf[18] have written an excellent survey article on early hydrocracking work. The chemistry of hydrocracking is essentially the carbonium-ion chemistry of catalytic cracking coupled with the chemistry of hydrogenation. Langlois and Sullivan[49] have reviewed the chemistry of hydrocracking. When the reactants are paraffins, cycloparaffins, and/or alkyl aromatics, the products obtained from both hydrocracking and catalytic cracking are similar; but when the reactant is polycyclic aromatics, wide differences in the product from these two refining processes are obtained. For instance, catalytic cracking of phenanthrene over acidic catalysts produced only coke and small quantities of gas, while hydrocracking of the same gave low-molecular-weight cyclic products.[89] This difference in the product is caused by the hydrogenation component of the catalyst and the excess of hydrogen usually present in hydrocracking. After hydrogenation, these aromatics, which produce coke in catalytic cracking, are converted to readily cracked naphthenes.[95] Di- and polycyclic aro-

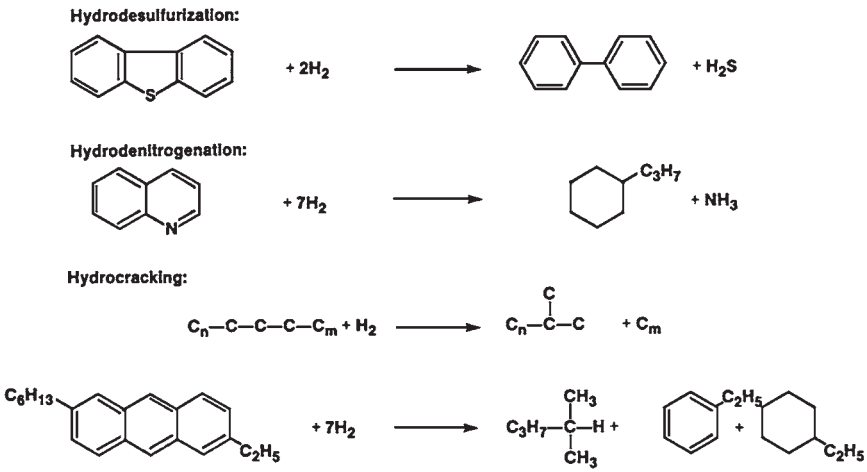

FIGURE 14.1.7 The chemical reactions in hydroprocessing.

Downloaded from Digital Engineering Library @ McGraw-Hill (www.digitalengineeringlibrary.com)
Copyright © 2004 The McGraw-Hill Companies. All rights reserved.
Any use is subject to the Terms of Use as given at the website.

HYDROGEN PROCESSING

matics joined by only one bond rather than two common carbon atoms are readily cleaved by hydrogen and converted to single-ring aromatics. These enhance the antiknock characteristics of the product gasoline.

Catalysts

Hydrotreating catalysts consist of a hydrogenation component dispersed on a porous, fairly inert material. Hydrocracking catalysts serve dual functions, containing both hydrogenation and cracking sites. The cracking sites are usually the result of using a porous support of an acidic nature. The best choice of a catalyst for a specific situation requires a particular balance between the cracking and hydrogenation functions.[82] Table 14.1.4 shows catalyst characteristics necessary to accomplish the reactions of industrial importance.

In hydrocracking to LPG and gasoline, strong cracking activity is required. This is achieved by using strongly acidic materials including both amorphous silica-aluminas and crystalline aluminosilicates. The acidity of these materials promotes reactions which lead to high isonormal ratios in the light paraffin products, low methane and ethane production, and conservation of monocyclic rings. The hydrogenation component reduces the concentration of coke precursors and maintains the effectiveness of the cracking sites. Catalysts can then be operated for long periods (1 to 4 years) at economic processing conditions.

In hydrocracking gas oils to produce jet fuel and middle distillate, catalysts with less acidity and stronger hydrogenation activities are used. This type of catalyst is valuable in producing high-viscosity-index lubricating oils by selectively saturating and converting the heavy aromatics, leaving behind the more valuable compounds. These catalysts are also used for hydrocracking residual fractions such as solvent-deasphalted oils and residua where the high nitrogen content would poison strong cracking activities.

For hydrotreating to remove impurities, catalysts with weak acidity are used, since cracking and the associated production of lightends and lighter liquid product(s) are usually undesirable. Strong hydrogenation activity is needed, particularly with heavy feedstocks containing high-molecular-weight aromatics. In some instances, "mild hydrocracking" provides refiners with the ability to increase the extent of cracking in their existing hydrotreaters. *Mild hydrocracking* usually refers to hydrocracking operations with less than 40 percent conversion to lighter products. Typically less than 20 percent occurs in a simple hydrotreater. Increased conversion is accomplished by increasing the ratio of the cracking function to the hydrogenation function in the catalyst or catalyst system.

Besides the chemical nature of the catalyst, which dictates the hydrogenation and cracking capabilities, its physical structure is also very important, particularly with heavy feedstocks. With gas oils and residuum feedstocks, the hydrocarbon feedstock is present as a liquid at reacting conditions so that the catalyst pores are filled with liquid. Both the hydrocarbon and the hydrogen reactants must diffuse through this liquid before reaction can take place at the interior surface within the catalyst particle. At high temperatures, reaction rates can be much higher than diffusion rates, and concentration gradients can develop within the catalyst particle. This reduces the overall reaction rate and can lead to costly inefficiencies and undesirable side reactions.

The choice of catalyst porosity is, therefore, very important. A high internal surface area gives high local reaction rates; but if, in achieving the high surface area, the catalyst pore size is reduced to a point which hinders reactant diffusion, then the overall performance will suffer.

Certain generalizations can be made about catalyst porosity.[82] For hydrocracking to LPG and gasoline, pore diffusion effects are usually absent. High surface areas (about 300 m^2/g) and low to moderate porosity (from 12-Å pore diameter with crystalline acidic components to 50-Å or more with amorphous materials) are used. With reactions involving

Downloaded from Digital Engineering Library @ McGraw-Hill (www.digitalengineeringlibrary.com)
Copyright © 2004 The McGraw-Hill Companies. All rights reserved.
Any use is subject to the Terms of Use as given at the website.

TABLE 14.1.4 Hydroprocessing Catalyst Characteristics[82]

Desired reaction	Catalyst characteristics			
	Acidity	Hydrogenation activity	Surface area	Porosity
Hydrocracking conversion:				
Naphthas to LPG	Strong	Moderate	High	Low to moderate
Gas oils to gasoline				
HGO to jet and middle distillate	Moderate	Strong	High	Moderate to high
HGO to high-VI lubricating oils				
Solvent-deasphalted oils and residua to lighter products				
Removal of nonhydrocarbon constituents:				
Sulfur and nitrogen in HGO and LGO	Weak	Strong	Moderate	High
Sulfur and metals in residua				
Aromatics saturation:				
LGO to jet fuel	Weak	Very strong	High	Moderate

Note: HGO = heavy gas oil; LGO = light gas oil.

Downloaded from Digital Engineering Library @ McGraw-Hill (www.digitalengineeringlibrary.com)
Copyright © 2004 The McGraw-Hill Companies. All rights reserved.
Any use is subject to the Terms of Use as given at the website.

HYDROGEN PROCESSING

high-molecular-weight impurities, pore diffusion can exert a large influence. Such processes need catalysts with pore diameters greater than 80 Å.

Reaction Kinetics

The section "Hydroprocessing Objectives" dealt with the difficulty of characterizing hydroprocessing feedstocks.[8] They may contain similar compounds with different boiling points or have similar boiling points for widely different compounds. Knowing the rate of the hydroprocessing reaction is vital in the design of a unit or in deciding how much feedstock can be processed in an existing unit. It determines the size of the reactor required. The rate of reaction is obtained in a pilot-plant experiment by measuring the extent of reaction at different residence times and the same temperature and hydrogen partial pressure. The rate invariably increases with temperature. Designing for high-temperature operation and high reaction rates has to be moderated because undesirable side reactions (including those which deactivate the catalyst) also are faster at high temperature.

Hydrotreating Kinetics. Despite the complexity of hydroprocesses, reaction kinetics can often be expressed in simple terms. Figure 14.1.8 shows the apparent first-order nature of the hydrodenitrification reaction. The data were obtained when a heavy California coker distillate was processed in the pilot plant over a weakly acidic catalyst containing both a Group VI and a Group VIII hydrogenation component. First-order behavior describes the data over a range of product nitrogen covering 4 orders of magnitude.[82]

Residuum desulfurization and demetalation kinetics are generally not first-order. ChevronTexaco Research pilot-plant desulfurization and demetalation kinetic data[14] for Arabian Heavy atmospheric residuum are shown in Fig. 14.1.9. The curves drawn through the experimental data are based on a second-order rate expression. Surprisingly, the desulfurization data fit the second-order expression down to product sulfur levels of 0.25 percent. The true mechanism is probably one of the multitude of first-order reactions, of varying rates, with the asphaltene molecules being the least reactive.[7,27] For most design calculations, the second-order expression is a useful simplification.

With high-metal feeds, however, considerable attention needs to be paid to the demetalation kinetics—not only in terms of predicting the product oil metal content, but also in predicting the impact of demetalation on catalyst life. Most of the feed metals react at desulfurization conditions to form metal sulfides. If these reaction products deposit in the interstices of the catalytic bed, then serious bed pressure drop increases can occur. If the reaction occurs inside the catalyst pores, then the sulfide deposit will ultimately deactivate the catalyst. Pilot-plant demetalation kinetic data for Arabian Heavy atmospheric residuum are also shown in Fig. 14.1.9. Nickel and vanadium have been added for this plot although there are subtle differences in their individual behavior. Again, second-order kinetics give the simplest expression capable of describing the data. Just as in the desulfurization reaction, this is probably an oversimplification of the final reaction mechanism. However, it is useful in most aspects of design.

Demetalation of this type is influenced by diffusion of the reactants through the catalyst pores. To explore this phenomenon, experiments with different-sized catalysts were carried out. The results are shown in Fig. 14.1.10. Here desulfurization and demetalation rate constants (second-order) are plotted versus temperature for both $^1/_{16}$-in-diameter cylindrical catalyst and the same catalyst crushed to 28 to 60 mesh. The desulfurization data show no significant particle size effect over the temperature range considered. The demetalation data, however, show a substantial pore diffusion limitation at all temperatures above 550°F. Both catalyst activity and activation energy (change of reaction rate with

Downloaded from Digital Engineering Library @ McGraw-Hill (www.digitalengineeringlibrary.com)
Copyright © 2004 The McGraw-Hill Companies. All rights reserved.
Any use is subject to the Terms of Use as given at the website.

HYDROGEN PROCESSING

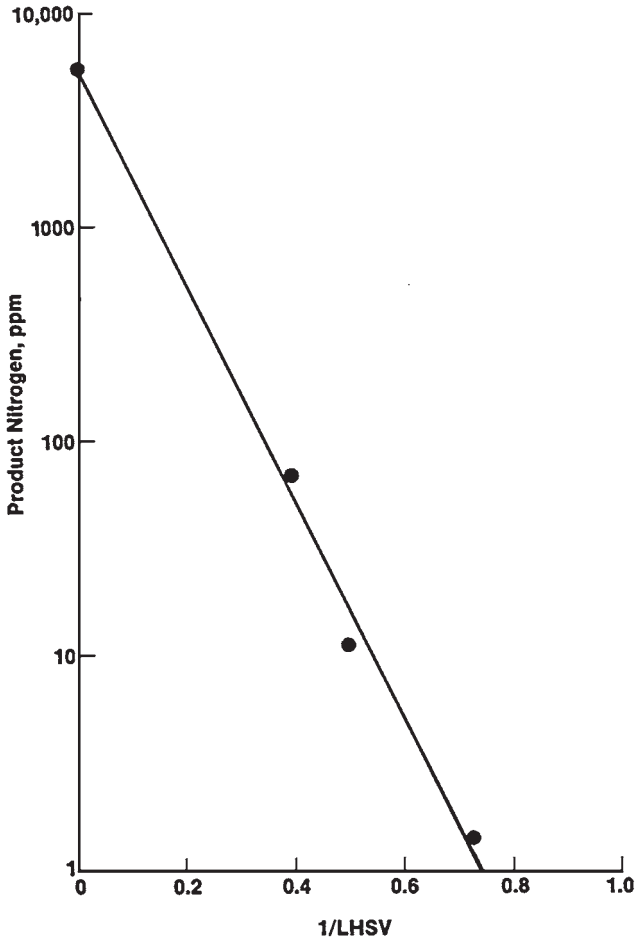

FIGURE 14.1.8 Hydrodenitrification kinetics for a California coker gas oil.[82]

temperature) are higher for the crushed catalyst. Residuum demetalation is a process which usually operates in a diffusion-controlled mode.

The theory used to describe isothermal reactions in porous catalytic media was developed by Thiele[94] and extended by Wheeler,[102] Weisz,[101] and others (e.g., Refs. 50 and 79). It shows that catalyst effectiveness is a function of the ratio of the intrinsic rate of reaction to the rate of reactant diffusion. A Thiele modulus is used to represent this ratio in dimensionless form. Many experimenters[56,57] have compared hydrotreating data with this theory. ChevronTexaco Research investigated the effect of catalyst pore size and particle size on the hydrodemetalation of Boscan crude oil.[11] The catalysts used were all of the same composition, and all had unimodal microporous pore size distributions. They were each tested at the same pressure level and the same desulfurization severity level. The demetalation data fitted well with pore diffusion theory, and predictions outside of the database were

Downloaded from Digital Engineering Library @ McGraw-Hill (www.digitalengineeringlibrary.com)
Copyright © 2004 The McGraw-Hill Companies. All rights reserved.
Any use is subject to the Terms of Use as given at the website.

HYDROGEN PROCESSING

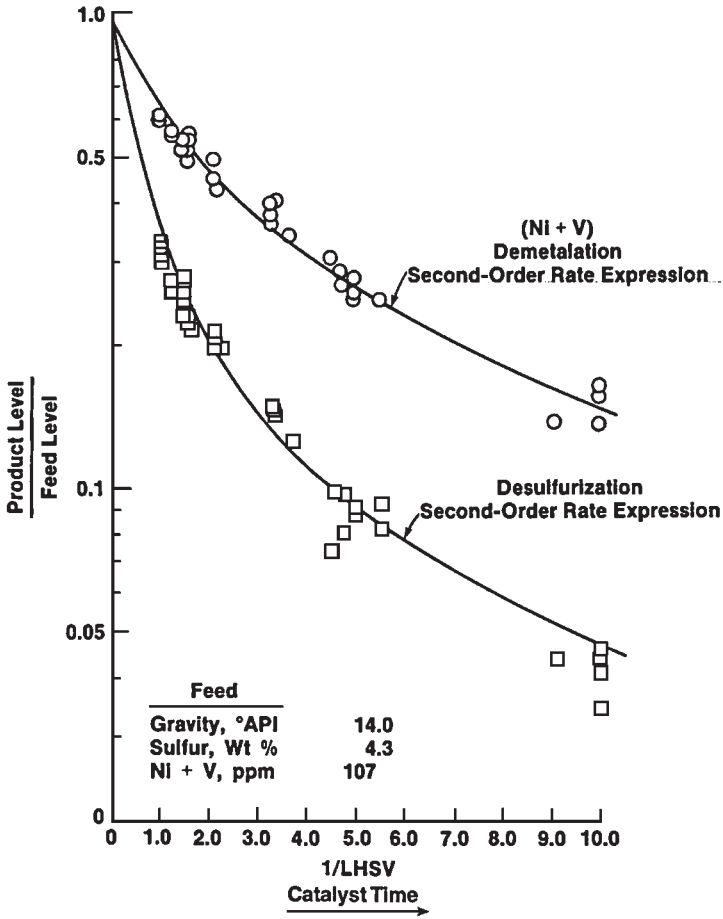

FIGURE 14.1.9 Desulfurization and demetalation kinetics—atmospheric residuum from Arabian Heavy crude.[14]

possible. Figure 14.1.11 shows the predicted activity versus pore diameter with particle size as a parameter.

This plot, which assumes a catalyst pore volume of 0.5 cm^2/g, shows that the optimum pore diameter for catalyst activity varies with the particle diameter. A small-particle-size and small-pore-diameter catalyst is the most active. The fact that small-particle-size, high-internal-surface-area catalysts are optimum is intuitively obvious for a pore diffusion-limited reaction. Sometimes, however, one is forced to choose a larger particle size (because of pressure drop considerations in a fixed-bed reactor or fluidizing velocity considerations in a fluidized-bed reactor). In any case, there is an optimum internal surface area and pore diameter for each catalyst size. The amount of hydrogenation component in the initial catalyst is also important.[35] As Spry and Sawyer[86] have pointed out, each crude oil will have a different optimum combination of catalyst size and porosity for maximum activity.

Downloaded from Digital Engineering Library @ McGraw-Hill (www.digitalengineeringlibrary.com)
Copyright © 2004 The McGraw-Hill Companies. All rights reserved.
Any use is subject to the Terms of Use as given at the website.

HYDROGEN PROCESSING

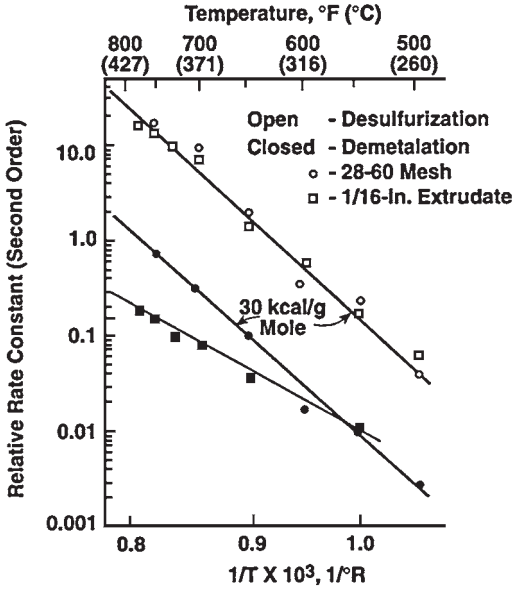

FIGURE 14.1.10 Desulfurization and demetalation kinetics—effects of temperature and particle size on atmospheric residuum from Arabian heavy crude.[14]

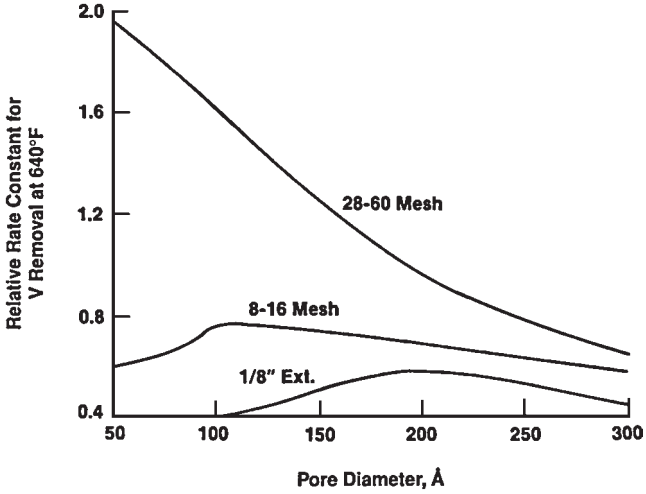

FIGURE 14.1.11 Estimated effect of catalyst size and pore diameter on Boscan demetalation kinetics.[11]

Downloaded from Digital Engineering Library @ McGraw-Hill (www.digitalengineeringlibrary.com)
Copyright © 2004 The McGraw-Hill Companies. All rights reserved.
Any use is subject to the Terms of Use as given at the website.

HYDROGEN PROCESSING

It has been suggested[4] that maximum activity occurs with a combination of narrow pores that create sufficient surface area and wide pores (above 100 Å) to make this surface accessible. Others[73] have shown that among all catalysts with the same surface area and porosity, the highest activity is attained for catalysts with a uniform pore size.

Hydrocracking Kinetics. Considerable work has also been carried out on hydrocracking reaction kinetics. It is generally accepted that the reaction is first-order with respect to the hydrocarbon reactant. It is appropriate to consider two types of hydrocracking catalysts:

- The strongly acidic catalysts are designed to process fairly clean feeds—light naphthas or heavier feedstocks that have already been severely hydrotreated. Zeolites are often used.
- Weakly acidic catalysts have a high ratio of hydrogenation to cracking activity and can hydrocrack raw feedstocks which have not been previously hydrotreated. Amorphous catalysts or catalysts with minor amounts of zeolites are used.

Figure 14.1.12 shows the effect of feed molecular weight on the reaction rates observed with strongly acidic hydrocracking catalysts. These data, which were obtained with an

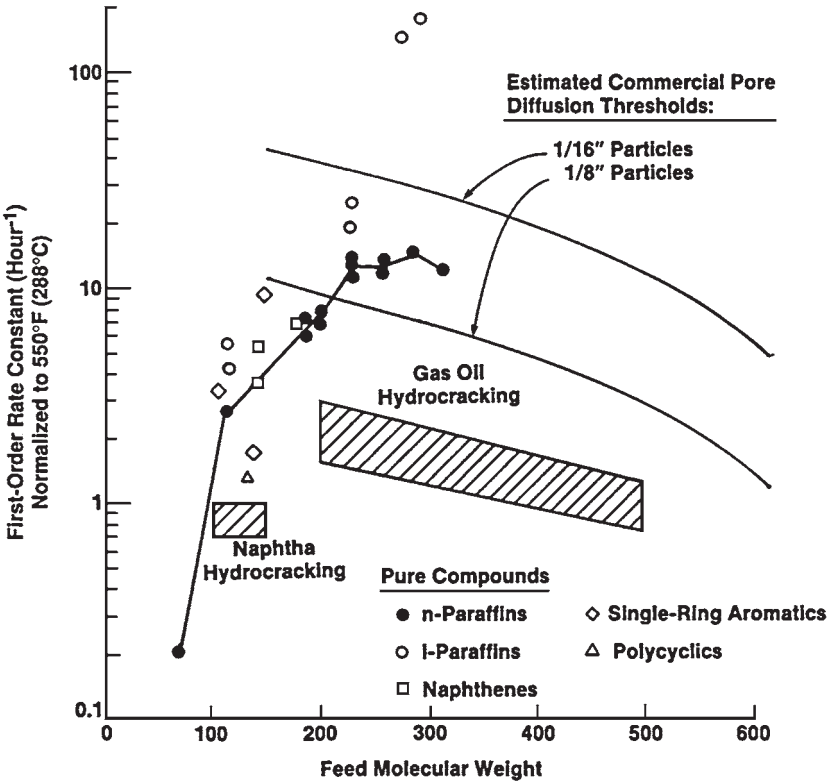

FIGURE 14.1.12 Comparison of laboratory and commercial reaction rates for strongly acidic catalysts.[82]

Downloaded from Digital Engineering Library @ McGraw-Hill (www.digitalengineeringlibrary.com)
Copyright © 2004 The McGraw-Hill Companies. All rights reserved.
Any use is subject to the Terms of Use as given at the website.

HYDROGEN PROCESSING

amorphous catalyst, illustrate general trends involving feed character and molecular weight.

First-order reaction rates normalized to a constant temperature and pressure are shown for a variety of pure hydrocarbons. For this display, a line is drawn connecting the points for normal paraffins (*n*-paraffins). Other points are displayed for isoparaffins (*i*-paraffins), naphthenes, aromatics, and polycyclics.

The pure compound rate constants were measured with 20 to 28 mesh catalyst particles and reflect intrinsic rates (i.e., rates free from diffusion effects). Estimated pore diffusion thresholds are shown for $^1/_8$-in and $^1/_{16}$-in catalyst sizes. These curves show the approximate reaction rate constants above which pore diffusion effects may be observed for these two catalyst sizes. These thresholds were calculated by using pore diffusion theory for first-order reactions.[79]

The pure compound cracking rates may be compared with typical reaction rates found commercially with wide-boiling petroleum fractions. Commercial naphtha hydrocracking data are consistent. Gas oil hydrocracking rates are lower and decrease with feedstock molecular weight. This is probably caused by the heavy aromatic molecules inhibiting the acid function of the catalyst. Despite this suppression of reaction rates, careful balancing of hydrogenation and cracking functions produces catalysts which operate efficiently at economical processing conditions. Consistent with the diffusion limit curves, particle size effects have not been observed commercially with these catalysts.

Figure 14.1.13 shows the effect of molecular weight on hydroprocessing rate constants observed with typical catalysts of lower acidity and higher hydrogenation activity. The hydrocracking of residuum is nearly 10 times more difficult than gas oil hydrocracking. This is because of the large asphaltenic molecules present in the residua. The residuum conversion rate constants shown in Fig. 14.1.13 represent data for straight-run residua containing a wide range of molecular sizes. Other kinetic experiments have shown[82] that if the heavy asphaltenic molecules are processed by themselves, much lower reaction rates are observed. Solvent-deasphalted oils are correspondingly easier to process than straight-run residua. The reaction rate constants for denitrification of gas oils, and desulfurization and demetalation of residua, are substantially higher than the hydrocracking rate constants. These nonhydrocarbon constituents, therefore, can be removed selectively with minimum hydrocracking of the parent molecule.

Two calculated pore diffusion threshold curves are shown in Fig. 14.1.13. These are the dashed lines that show the rate constants above which pore diffusion controls for both $^1/_{16}$-in and $^1/_8$-in catalyst sizes. For gas oil hydrocracking, the observed reaction rate constants are not high enough to lead to problems; this is supported by commercial hydrocracking experience. The high denitrification rate constants suggest that pore diffusion problems could occur with active catalysts at high temperatures. The estimated diffusion limits for residuum processing with $^1/_{16}$-in catalysts confirm that demetalation is influenced markedly and desulfurization to a lesser extent.

Spent Catalyst Analysis. Careful analysis of spent residuum hydrodemetalation catalysts has helped quantify the role of diffusion in the reaction. Examples of the deposition profiles for nickel, vanadium, and iron at both the inlet and outlet of the catalyst bed[93] are shown in Fig. 14.1.14. This catalyst was used to hydrotreat Arabian Heavy residuum. A number of important features are apparent in the spent catalyst results. Iron is found primarily outside the catalyst particle as a thin scale. This is generally the case. Nickel generally seems to penetrate the catalyst to a greater extent than vanadium. These differences in depositional patterns are a result of differences in the reactivities and/or diffusivities of the organometallic molecules. Both nickel and vanadium display a maximum concentration inside the edge of the particle, but the point of maximum concentration approaches the edge of the catalyst near the outlet of the reactor.

Downloaded from Digital Engineering Library @ McGraw-Hill (www.digitalengineeringlibrary.com)
Copyright © 2004 The McGraw-Hill Companies. All rights reserved.
Any use is subject to the Terms of Use as given at the website.

HYDROGEN PROCESSING

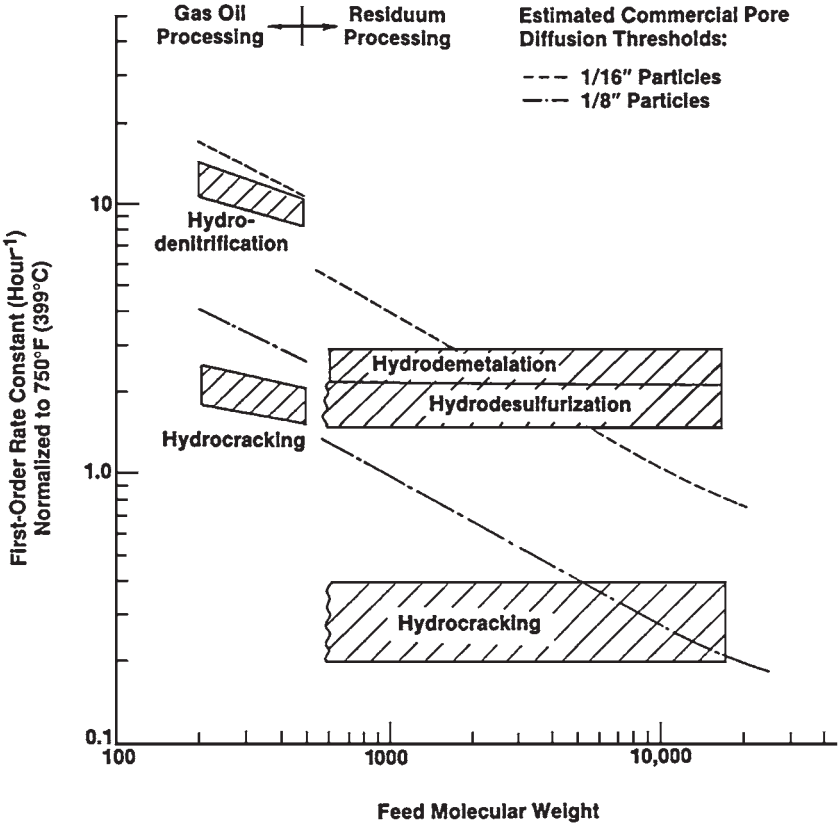

FIGURE 14.1.13 The effect of feed molecular weight on hydroconversion rates—moderately and weakly acidic catalysts.[82]

The fact that maximum concentrations are found inside the edge of the particle is difficult to explain. It may be due to hydrogen sulfide (H_2S) being a reactant, or it may be due to specific reaction intermediates being formed. It complicates data analysis, since pore diffusion theory coupled with a simple reaction mechanism does not predict an internal maximum. Despite this, it is interesting to compare the change in the maximum deposit concentrations from reactor inlet to reactor outlet with the change in concentration of metals in the oil. During the test in which the profiles shown in Fig. 14.1.14 were generated, the average vanadium removal was 58 percent and the average nickel removal was 42 percent. The maximum deposit concentrations of both metals decreased by approximately 80 percent from reactor inlet to outlet, clearly showing that demetalation is not a simple first-order reaction. The change in the maximum deposit considerations is close to what one would predict using second-order kinetics, assuming that the concentrations of metals in the feed and product oil apply to the maxima at the respective ends of the reactor. This result is consistent with the kinetic measurements shown in Fig. 14.1.9.

In ebullated bed reactors, where the catalyst is fluidized and kept in random motion by the upflowing liquid and gas, the catalyst is also subject to nickel and vanadium deposition but in a more uniform manner. This is due to the fact that in an ebullated bed reactor,

Downloaded from Digital Engineering Library @ McGraw-Hill (www.digitalengineeringlibrary.com)
Copyright © 2004 The McGraw-Hill Companies. All rights reserved.
Any use is subject to the Terms of Use as given at the website.

HYDROGEN PROCESSING

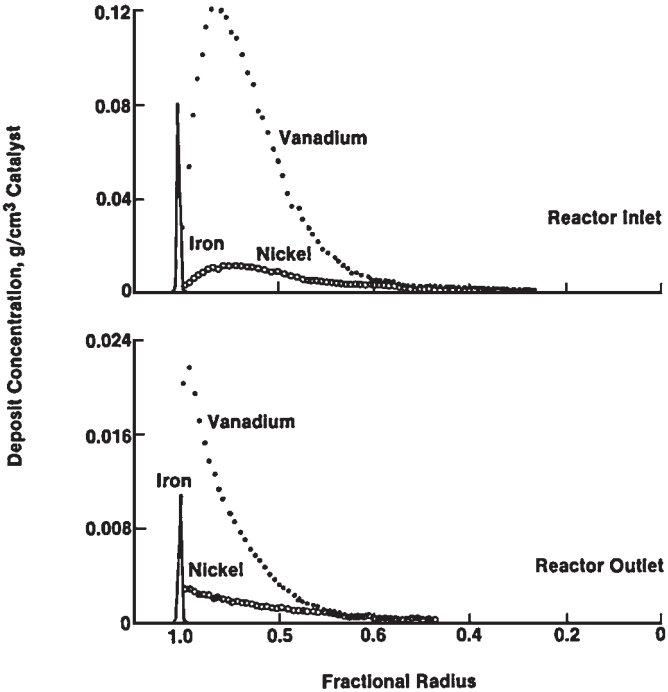

FIGURE 14.1.14 Typical deposition patterns for nickel, vanadium, and iron in residuum hydroprocessing catalyst.[93] [Arabian Heavy atmospheric residuum, reaction temperature = 700°F (371°C), hydrogen partial pressure = 1825 lb/in^2 abs, $^1/_{16}$-in extrudate catalyst.]

catalyst is added and withdrawn batchwise while operating in order to maintain the required activity of the catalyst, based on a maximum allowable metals loading on the "equilibrium" catalyst in the reactor.

Hydrogenation-Dehydrogenation Equilibrium

The saturation of aromatic compounds is important in both hydrotreating and hydrocracking. This reaction is reversible, and the equilibrium between the forward and reverse reactions can hinder the extent of saturation at normal commercial conditions. Gully and Ballard[36] summarized the early knowledge on aromatics hydrogenation equilibria. The hydrogenation reaction is favored by high hydrogen partial pressures and low operating temperatures. The higher-molecular-weight aromatic compounds need a higher hydrogen partial pressure to achieve the same extent of reaction at the same temperature as the lower-molecular-weight molecules.

In some hydroprocesses, the heaviest naphthenic molecules are dehydrogenated while the lower-boiling ones are undergoing desulfurization. This occurs at end-of-run (EOR) temperatures in low-pressure VGO hydrotreaters. It was also the basis for the Autofining process, developed by British Petroleum, for desulfurization of light oils using no outside source of hydrogen.[72] Hengstebeck[39] has proposed a hydrogenation-dehydrogenation

Downloaded from Digital Engineering Library @ McGraw-Hill (www.digitalengineeringlibrary.com)
Copyright © 2004 The McGraw-Hill Companies. All rights reserved.
Any use is subject to the Terms of Use as given at the website.

HYDROGEN PROCESSING

index for correlating experimental data. Yui and Sanford[104] studied the kinetics of aromatics hydrogenation in order to improve the cetane number of an LGO feed so that clean-burning diesel fuel could be produced. They measured the percent aromatics hydrogenation at different temperatures, pressures, and residence times [liquid hourly space velocity (LHSV)]. Data obtained with Arabian Light LGO are shown in Fig. 14.1.15, which is taken from their paper. The results were compared with a kinetic model for aromatics hydrogenation based on a simple first-order reversible reaction. Agreement with the model was excellent. This particular reaction is limited by equilibrium at temperatures above about 360°C when operating pressures of 5 to 10 MPa are used.

For this reason the hydrogen consumption will parallel the extent of saturation. The amount of hydrogen consumed will, therefore, first increase and then decrease as operating temperatures are increased. The most important design parameter in such a unit is the hydrogen partial pressure. It should be high enough to allow the achievement of the target cetane number, but not so high as to consume more hydrogen than is absolutely needed. As such, it is very important to optimize the use of hydrogen and the ability to control hydrogen partial pressure. Reactor systems utilizing both cocurrent and countercurrent reactor systems have been commercialized in various hydroprocessing applications. Such

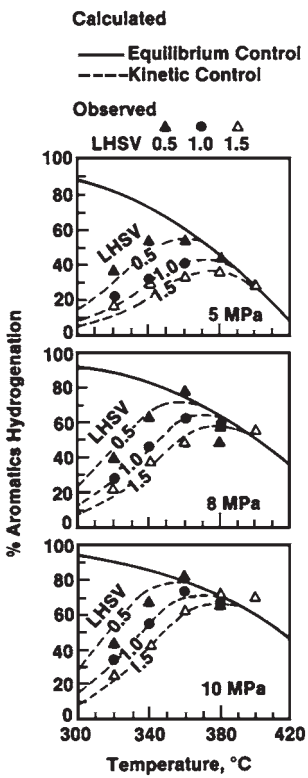

FIGURE 14.1.15 Observed and calculated percent aromatics hydrogenation at various operating conditions (Arabian light gas oil).[104]

Downloaded from Digital Engineering Library @ McGraw-Hill (www.digitalengineeringlibrary.com)
Copyright © 2004 The McGraw-Hill Companies. All rights reserved.
Any use is subject to the Terms of Use as given at the website.

HYDROGEN PROCESSING

reactor systems offer benefits over cocurrent (downward trickle flow) reactors. Specific benefits stem from the ability to add the highest-purity hydrogen-rich gas directly at the countercurrent reactor outlet, thus increasing hydrogen partial pressure and increasing aromatics saturation activity of the catalyst even though the reaction temperature may be higher than at the reactor inlet. The ability to produce an increasing hydrogen partial pressure profile for the downflowing liquid reactant against upflowing hydrogen-rich gas effectively changes the aromatics saturation equilibrium providing more hydrogenation activity for a given amount of catalyst at a given temperature. This is described in detail by Hamilton, Baldassari, and Dave.[105]

Reaction Selectivity

The modern refiner is very interested in controlling selectivity in hydroprocessing. The refiner needs to encourage one chemical reaction while discouraging a number of others. The products must meet certain specifications, without exceeding them and consuming valuable hydrogen that could be used elsewhere in the refinery. Selectivity is influenced by variations in catalyst properties and by variations in operating conditions.

Residuum Processing. Whenever a hydroprocessing unit operates with some of the reactants limited by the rate of diffusion to the active site, there are always opportunities to influence reaction selectivity by modifying the pore size of the catalyst. Hensley and Quick[38] have pointed out that small-pore catalysts can be used for selective desulfurization of low-metal feeds with moderate demetalation whereas large-pore catalysts can be used to remove metals and asphaltenes with minimum sulfur removal and hydrogen consumption. Other researchers[43] have correlated selectivity with a distribution factor obtained from measuring nickel and vanadium deposition profiles within spent catalyst particles. This factor is similar to the effectiveness factor of pore diffusion theory.

Catalyst operating temperature can influence reaction selectivity also. The activation energy for hydrotreating reactions is much lower than that for the hydrocracking reaction. Raising the temperature in a residuum hydrotreater increases, therefore, the extent of hydrocracking relative to hydrotreating. This, of course, also increases the hydrogen consumption. For fixed-bed residue hydroprocessing units, Fig. 14.1.16 illustrates the different operating strategies which have been used when Arabian Light vacuum residuum is hydroprocessed.[13] The region below about 40 percent conversion represents normal residuum hydrotreating which produces LSFO or good-quality FCC feed.

The relative hydrogen consumption is compared with the hydrocracking conversion. These two reactions have different activation energies; i.e., the rates respond to temperature differently. Curves are shown depicting how the hydrogen consumption varies from start to end of a variety of runs carried out at constant but different product sulfur levels. Lines of constant temperature are drawn to show the approximate temperature levels required to achieve at least 6 months' catalyst life at different product sulfur levels (from 1.8 to 0.3 percent). One can see that the hydrocracking conversion increases substantially during the run. The hydrogen consumption increase is less noticeable, showing that the catalyst selectively loses its hydrogenation capability during the run. This operating strategy of maintaining constant product quality tends to minimize hydrogen consumption.

Another operating strategy which is becoming popular in commercial units[78] is to maximize conversion throughout a run cycle. This is represented by a vertical line on Fig. 14.1.16. The start-of-run (SOR) low-temperature condition achieves a very low-sulfur product and requires a high hydrogen consumption. As the catalyst fouls, the system

Downloaded from Digital Engineering Library @ McGraw-Hill (www.digitalengineeringlibrary.com)
Copyright © 2004 The McGraw-Hill Companies. All rights reserved.
Any use is subject to the Terms of Use as given at the website.

HYDROGEN PROCESSING

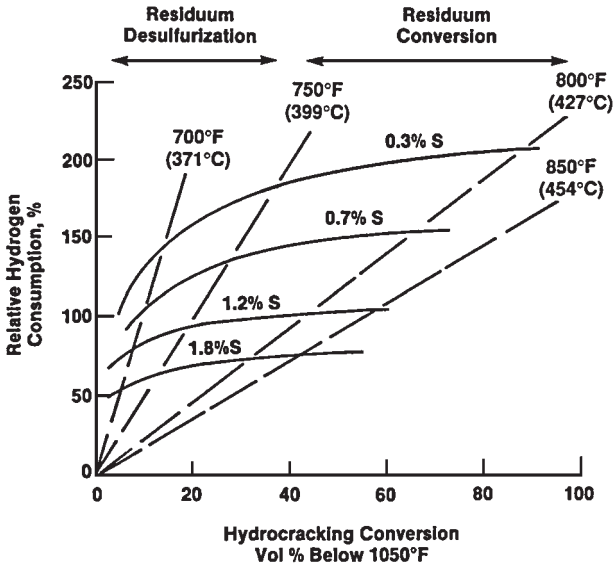

FIGURE 14.1.16 A representation of hydrogen usage in residuum processing.[13] (Arabian Light, 1050°F+ feed, catalyst life greater than 6 months.)

moves downward on the chart. The hydrogen consumption drops, and the product quality deteriorates. Selectivity differences between SOR and EOR have always been noticeable in residuum hydroprocessing. As refiners strive to maximize hydrocracking in hydrotreating, these differences will be even more striking.

Distillate Processing. Catalyst properties also influence selectivity in distillate hydrocracking. They can affect the product yield structure and the product qualities. Sullivan and Meyer[90] showed the results of a comparison of seven different catalysts described in Table 14.1.5 (with different relative strengths of acidity to hydrogenation). Since they all can be classified as strongly acidic, they were tested on California heavy gas oils which had already been hydrotreated. The tests were carried out by recycling the heavy product to the feed so that it was completely converted to jet fuel and lighter products.

The work focused on the octane number of the light product naphtha. A high octane number in the light naphtha is particularly desirable because it is more difficult to upgrade this low-boiling fraction than the higher-boiling naphthas.

Figure 14.1.17 shows the measured jet fuel yields plotted versus the iso/normal ratio measured in the light naphtha product. This ratio correlates well with F-1 clear octane numbers for light naphthas. In general, the catalysts which produce the highest light naphtha octane number produce the lowest jet fuel yields. Catalyst E, based on a crystalline faujasite material, gave somewhat lower jet fuel yields than the amorphous catalysts. The authors were able to influence this selectivity by adding nitrogen and sulfur compounds to the feed. The resulting preferential poisoning of either the acid or the hydrogenation sites showed that the liquid yields and the light naphtha octanes are related to the ratio of the relative strengths of these sites.

Downloaded from Digital Engineering Library @ McGraw-Hill (www.digitalengineeringlibrary.com)
Copyright © 2004 The McGraw-Hill Companies. All rights reserved.
Any use is subject to the Terms of Use as given at the website.

HYDROGEN PROCESSING

TABLE 14.1.5 Experimental Hydrocracking Catalysts[90]

Catalyst identification	Hydrogenation component	Metal content, wt %	Support material
A	Pd	0.5	Activated clay (low acidity)
B	Pd	1.0	Amorphous silica-alumina
C	Pd	0.2	Amorphous silica-alumina
D	Pd	0.5	Activated clay (moderate acidity)
E	Pd	0.5	Faujasite
F	Pd	0.5	Amorphous silica-alumina (activated)
G	Sulfided Ni	10.0	Amorphous silica-alumina

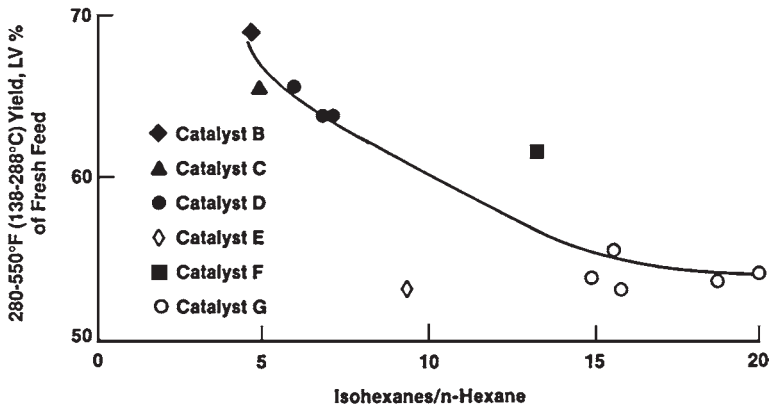

FIGURE 14.1.17 Relationship between 280–550°F (138–288°C) product and isohexanes/*n*-hexane at 580 to 615°F (304 to 324°C)—hydrocracking of California gas oil.[90]

With mildly acidic hydrocracking catalysts and raw feedstocks, catalyst properties can also influence selectivity for different product yield structures. Stangeland[87,88] has proposed a kinetic model for the prediction of hydrocracker yields. The model represents the large number of different molecules present in the feed as a series of 50°F boiling-range cuts. Each of the cuts cracks via a first-order reaction to form a series of lighter cuts. One parameter describes the effect of boiling point on the rate of reaction. Two other parameters determine what products will be generated as each cut cracks. Excellent agreement with experimental data was obtained. Values of the three parameters depend on catalyst type and feed paraffin content. Generally the higher the feed paraffin content, the lower the total liquid yields and the higher the light gas yields.

Hydrocracking catalysts have been developed to produce different ratios of middle distillate to naphtha. Large pore diameters and high alumina/silica ratios result in a higher production of middle distillates with less naphtha.[12] An easier way to change the ratio of middle distillate to gasoline in a hydrocracker is to change the operation of the product distillation unit. This will be covered in "Process Capabilities" below.

Downloaded from Digital Engineering Library @ McGraw-Hill (www.digitalengineeringlibrary.com)
Copyright © 2004 The McGraw-Hill Companies. All rights reserved.
Any use is subject to the Terms of Use as given at the website.

HYDROGEN PROCESSING

Catalyst Stability and Life. To quote J. B. Butt,[15]

> The discussion so far has ignored the omnipresent fact of catalyst mortality. Common causes of deactivation are poisoning by strong chemisorption of impurities on the active site, coking or fouling resulting from the formation of hydrogen-deficient carbonaceous residues on the surface in hydrocarbon reactions, and sintering, which is the loss of active surface by various processes of agglomeration.

Observations with Residual Feedstocks. In the hydroprocessing of light oils, the catalyst deactivation is usually due to a coking reaction. Coke precursors are the heaviest aromatic compounds in the feed, and the coking reaction is favored by high operating temperatures and low pressures. Plants are designed to run at sufficiently high pressure levels that the coke precursors can be hydrogenated to control the fouling. Long run cycles can then be achieved. With heavy residuum feedstocks, deactivation is thought to be due to poisoning by the feed metals. One of the first commercial observations of this phenomenon was reported by Ozaki, Satomi, and Hisamitsu.[70] In monitoring early operation of the Nippon Mining Company Gulf–designed fixed-bed residuum hydrodesulfurization (HDS) unit, they observed a poisoning wave moving down through the reactor, as shown in Fig. 14.1.18. The wave steadily caused the top bed heat release to drop off so that the lower beds had to operate at higher temperatures to compensate.

There have been many studies of this poisoning phenomenon. ChevronTexaco[93] analyzed samples of catalyst at both different bed positions and lengths of time on-stream (see Fig. 14.1.20) in a pilot-plant run. Figure 14.1.19 shows how the peak concentrations of vanadium varied with time at three different positions.

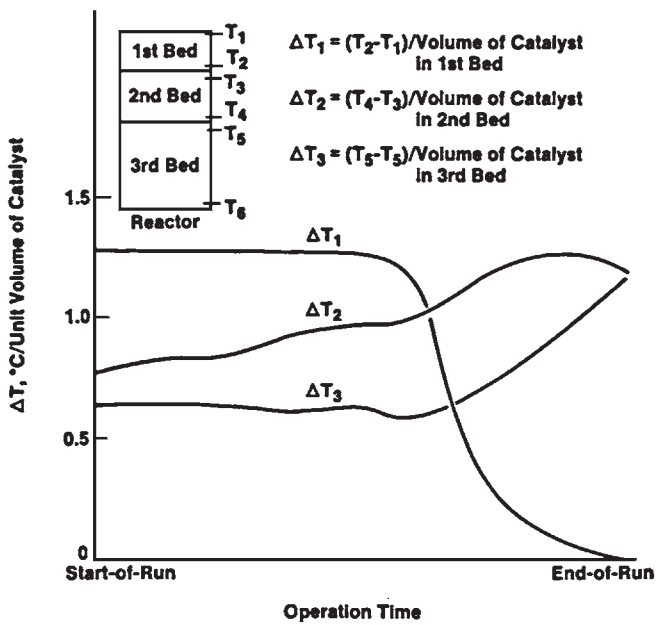

FIGURE 14.1.18 Change of temperature gradient through the reactor beds of a commercial residium hydrotreating plant.[70]

Downloaded from Digital Engineering Library @ McGraw-Hill (www.digitalengineeringlibrary.com)
Copyright © 2004 The McGraw-Hill Companies. All rights reserved.
Any use is subject to the Terms of Use as given at the website.

HYDROGEN PROCESSING

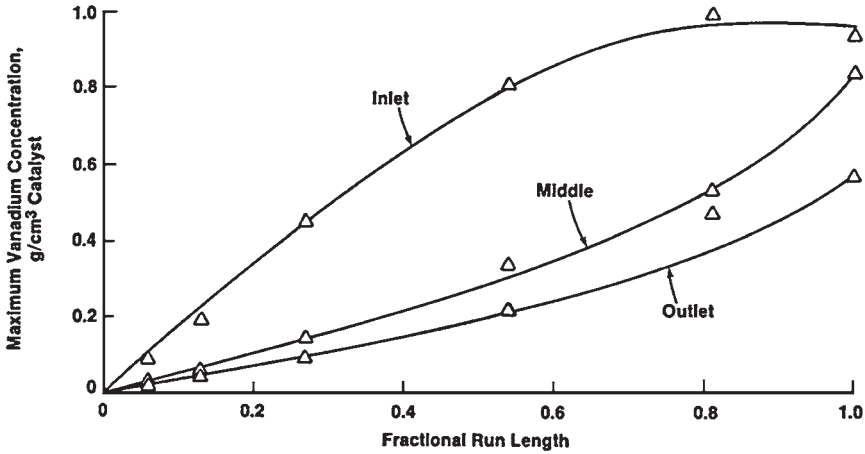

FIGURE 14.1.19 Maximum vanadium deposit concentration as a function of reactor position and time.[93]

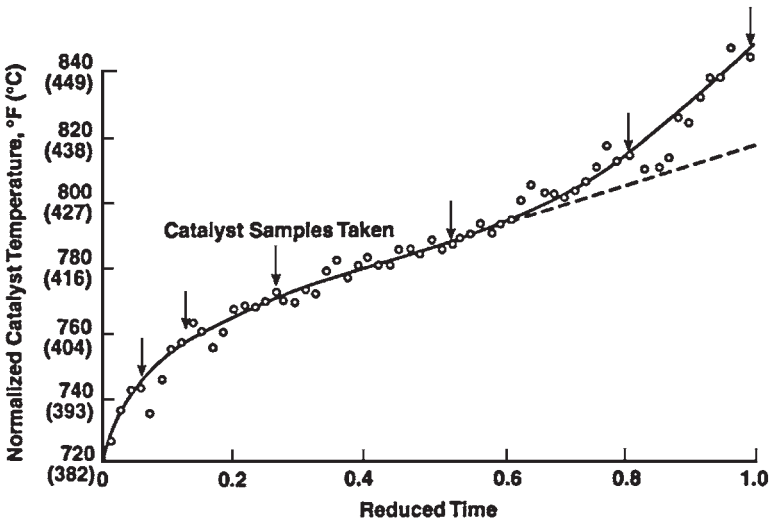

FIGURE 14.1.20 Typical deactivation curve for residuum hydroprocessing catalyst.[93] (Arabian Heavy atmospheric residuum desulfurization, product sulfur = 1 wt %, 1.6-mm Arabian extrudate catalyst.)

A simple calculation of monolayer coverage of vanadium sulfide suggests that at the top of the bed the maximum deposit represents 5 to 12 monolayers. If the deposit were V_3S_4 and had the density of the bulk sulfide, such a deposit would be 15 to 40 Å in depth. For a catalyst with a pore diameter in the range of 100 to 200 Å, typical of many residuum hydroprocessing catalysts,[30,67] such a deposit would reduce the diameter of the pores significantly.

Downloaded from Digital Engineering Library @ McGraw-Hill (www.digitalengineeringlibrary.com)
Copyright © 2004 The McGraw-Hill Companies. All rights reserved.
Any use is subject to the Terms of Use as given at the website.

HYDROGEN PROCESSING

The physical obstruction of the pore structure decreases the effective diffusivity for the reactant molecules and, thereby, increases the Thiele modulus for the desired reaction. If the desired reaction were already near the diffusion limit when the catalyst was fresh, it might well be expected to become diffusion-limited when the catalyst is heavily laden with metals. In this case, temperature would have to be raised at an ever-increasing rate to maintain conversion. Such a situation is typical of the later stages of a hydroprocessing run, as illustrated in Fig. 14.1.20. The effect of this pore mouth plugging on catalyst activity was measured quantitatively in another experiment. A catalyst bed which had reached a typical EOR condition was divided into six sections, and the second-order desulfurization rate constant was measured independently for each section.

A dramatic activity profile was found (see Fig. 14.1.21). The top one-third of the bed was virtually dead, having little more than one-third the activity of the average bed and less than one-sixth the activity of the bottom of the bed. The bottom one-third of the bed, while significantly deactivated relative to the fresh catalyst, was relatively unaffected by pore plugging and still had sufficient activity to be useful.

This experiment confirms the commercial observation described earlier.[70] Pore plugging occurs as a wave which, after an induction time, moves from the inlet of the reactor toward the outlet.

Factors Affecting Pore Mouth Plugging. The onset of the pore plugging wave and the rapidity with which it moves through the bed are dependent on the details of the catalyst pore structure and the distribution of metals along the length of the catalyst bed. The pore structure directly determines the maximum local deposit buildup that can be tolerated before pore diffusion is adversely affected. The maximum concentration of deposit within a catalyst particle at a given time depends on process

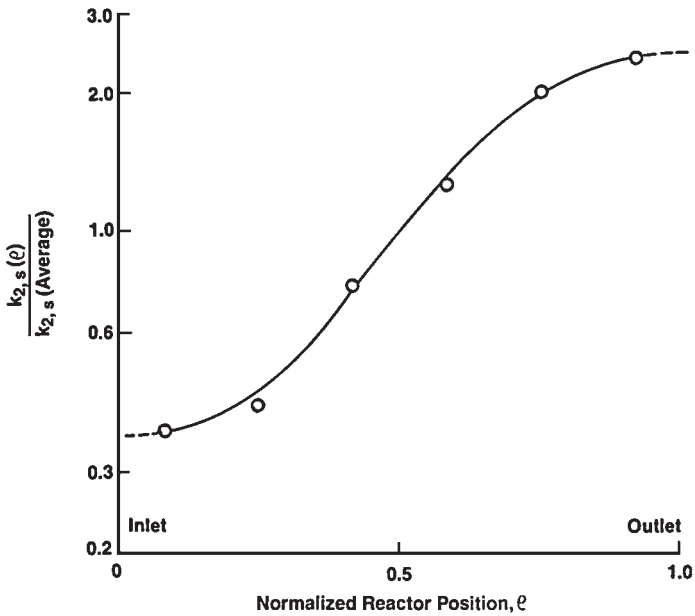

FIGURE 14.1.21 Catalyst activity at end of run as a function of reactor position.[93] (Arabian Light atmospheric residuum desulfurization.)

Downloaded from Digital Engineering Library @ McGraw-Hill (www.digitalengineeringlibrary.com)
Copyright © 2004 The McGraw-Hill Companies. All rights reserved.
Any use is subject to the Terms of Use as given at the website.

HYDROGEN PROCESSING

and catalyst variables. The more uniform the intraparticle distribution, the lower the maximum concentration will be after a given time, and the later the onset of pore plugging will occur. The rate of advance of the pore plugging wave, on the other hand, is related to the uniformity of the interparticle distribution along the length of the reactor. The more uniform this distribution, the more rapidly the wave will transverse the reactor. This simple principle is illustrated by the following example.

Two catalysts having identical properties, except for their particle size, were used to desulfurize Iranian Heavy atmospheric residuum to an equal extent at identical processing conditions. Their deactivation curves are compared in Fig. 14.1.22. The onset of pore plugging at the top of the catalyst bed occurred at essentially the same time in these two tests because the porous properties of the catalysts were the same and the processing conditions were the same (with the exception of the subsequent temperature program). However, the speed with which the pore plugging wave moved through the bed is very different. Because a larger fraction of the catalyst volume is accessible to the depositing metals with the small-size catalyst, more metal is accommodated at the top of the bed, and the metal concentration profile down the catalyst bed is steepened. At the decreased concentrations of metal contaminants to which the lower part of the bed is exposed, more time is required for the maximum deposit to reach its limiting value, and the rate of travel of the pore plugging wave is thereby slowed.

Catalyst particle sizes in residuum hydrotreating service have been reduced in some designs in order to maximize life. The pilot-plant tests show how important it is to study this deactivation phenomenon over the complete run cycle. Had the tests been terminated after just 20 percent of the time, the relative ranking of the catalysts would have been reversed.

Factors Affecting Initial Catalyst Deactivation. The catalyst deactivation which occurs before the onset of pore mouth plugging is more difficult to characterize, and there is controversy regarding whether it is due primarily to coke or metals deposition.

In the early stages of a hydroprocessing run, a fraction of the catalyst's surface area is converted from its original state to a surface composed of mixed nickel and vanadium sulfides. While these sulfides have catalytic activity for hydrogenolysis, they are considerably

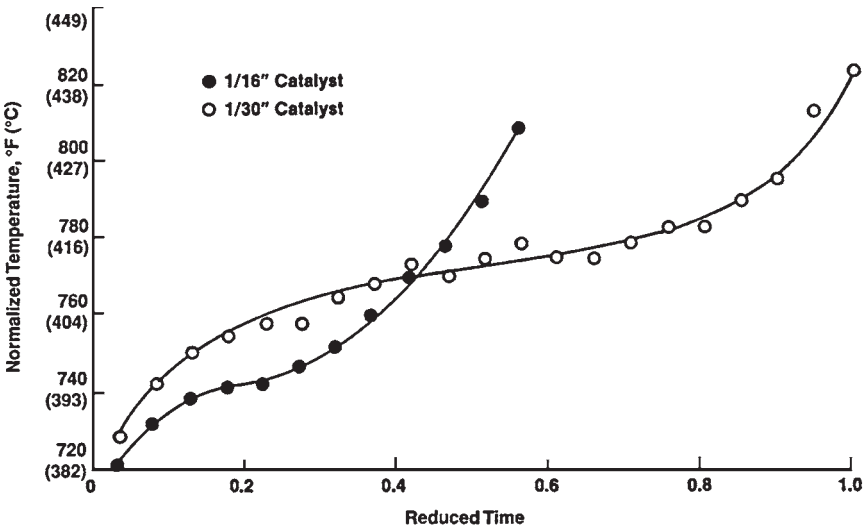

FIGURE 14.1.22 The effect of catalyst particle size on catalyst deactivation.[93] (Iranian Heavy atmospheric residuum, product sulfur = 0.5 wt %.)

Downloaded from Digital Engineering Library @ McGraw-Hill (www.digitalengineeringlibrary.com)
Copyright © 2004 The McGraw-Hill Companies. All rights reserved.
Any use is subject to the Terms of Use as given at the website.

HYDROGEN PROCESSING

less active than the fresh catalysts used in these studies. Under these conditions, the catalyst temperature must be raised to hold conversion constant. This form of *partial surface poisoning* may be the major cause of deactivation in the early part of a run. As illustrated in Fig. 14.1.20, the period of initial catalyst deactivation is characterized by a high, but declining, deactivation rate which asymptotically approaches a constant value one-quarter of the way through the run. Such behavior is a reasonable consequence of the proposed partial surface poisoning mechanism if multilayers of the contaminant deposit have the same catalytic activity as the initial monolayer.

A high level of coke forms rapidly in an outer annulus of the catalyst. However, it declines slowly as feed metals deposit and is offset by the increase of coke in the interior of the catalyst. Since the initial deposition pattern of coke parallels that of the metals, both probably being due to the presence of high-molecular-weight species, it is difficult to unequivocally assign responsibility for the initial deactivation to either contaminant. However, several arguments favor organometallics as the primary deactivant when the metal content of the feed exceeds about 10 ppm. The length of the initial deactivation period appears to be related to the concentration of organometallics in the feed, but not to the concentration of coke precursors (as measured by Conradson carbon content) in the feed. The period of accelerated coke laydown is short relative to the entire initial deactivation period, and the deposited coke undergoes complex changes throughout this time. On the other hand, the metal deposits build up monotonically, and the time required to achieve monolayer coverage throughout the reactor is comparable in length to the initial deactivation period. There have been a number of both experimental and theoretical studies aimed at developing mathematical models to describe catalyst deactivation in residuum hydroprocessing.[62,64] Commercially the problem is very significant, since large quantities of catalysts are consumed in this service. Increasing catalyst life reduces the refiner cost per barrel of feedstock processed.

Multicatalyst Systems

As our understanding of the hydrotreating and hydrocracking reactions improved, the advantages of using multicatalyst systems were recognized and are now commonly practiced in order to achieve optimum performance relative to hydrogen utilization and hydroprocessing objectives. Multicatalyst systems are particularly effective in the processing of heavier feeds where impurity removal can be accomplished in a guard bed that protects the major catalyst. They are also used in the hydrotreatment of pyrolysis naphtha where one stage is designed to saturate indenes and diolefins while the second stage saturates olefins and desulfurizes the naphtha.[5] In diesel hydroprocessing, nonnoble metal catalysts in a first stage for desulfurization, denitrification, cetane improvement, cold flow improvement, or even distillation shift (T95 reduction), in conjunction with noble-metal-containing catalysts in a second-stage reactor for aromatics saturation, have been commercially used.

In residuum hydrotreating, multicatalyst systems are common.[42] In a typical graded system, a metal-selective catalyst protects catalysts in the lower part of the reactor from significant pore mouth plugging. The downstream catalyst or catalysts are tailored to be most active for sulfur, Ramsbottom carbon, and molecular weight reduction.

In hydrocracking, the inhibiting effect of heavy aromatics on the cracking reactions also creates a need for a two-catalyst system. The first catalyst is sometimes just a hydrotreating catalyst and sometimes a moderately acidic hydrocracking catalyst. The catalyst saturates aromatics, removes sulfur and nitrogen contaminants, and, if a hydrocracking catalyst is used, causes some cracking to lighter products. The second catalyst is designed to work on clean feeds. Sometimes, if motor gasoline is the major product, a highly acidic catalyst is used. If middle distillate is the required product, then it is better

Downloaded from Digital Engineering Library @ McGraw-Hill (www.digitalengineeringlibrary.com)
Copyright © 2004 The McGraw-Hill Companies. All rights reserved.
Any use is subject to the Terms of Use as given at the website.

HYDROGEN PROCESSING

to use a moderately acidic catalyst in the second stage. Examples of product yields achieved with such systems will be given in "Process Capabilities."

Commercial Catalysts

The successful application of hydroprocessing to heavy oil upgrading has been achieved because of emphasis on catalyst development. Table 14.1.6 summarizes the number of hydroprocessing catalysts available to the petroleum industry and comments on their general characteristics as provided in the *Oil and Gas Journal,* October 11, 1993, issue. Over the past decade numerous new catalysts have been developed and commercialized in response to the increased demand for hydroprocessing. Similar updated lists are published from time to time by sources such as the *Oil and Gas Journal.*

The chemical composition and physical properties of catalysts are, in general, proprietary. Various authors[30,67,80] have summarized important aspects of the development of such catalysts. In the case of residuum hydrotreating catalysts, early work centered on the type of alumina used to support the Group VIB and Group VIII metal hydrogenation component.[4] As more pilot-plant and commercial data have shown the subtleties of catalyst deactivation, the role that diffusion in the pores plays has become better defined. Smaller particles sizes and unique particle shapes[74] have been developed. Because of the high concentrations of metal poisons in such feedstocks, catalyst consumption is high relative to what can be achieved in distillate processing. Efforts have therefore emphasized low-cost catalysts. Work has also focused on rejuvenating or regenerating spent residuum hydroprocessing catalysts.[21]

Pore diffusion considerations have also been important in the development of hydrocracking catalysts. The driving force for this approach has been quite different from that in residuum processing. Instead of tailoring catalysts to handle the largest molecules contained in crude oil, the objective has been to find the optimum way to use the small-pore-size crystalline silica-alumina zeolitic materials first reported in the late 1950s. Zeolitic hydrocracking catalysts usually contain noble metal hydrogenation components. They are active in the presence of hydrogen sulfide and, because of the large number of active sites, maintain their activity in the presence of ammonia.[54] They usually make a lighter product than the amorphous catalysts and, because of their small pore size, have difficulty in converting heavy polycyclic aromatics. Zeolitic materials have unique selectivity for some reactions because some molecular species are excluded from the pores and therefore cannot react. This is the basis of the first catalytic dewaxing process.[23] Corbett[19] has summarized some of the zeolite and residuum hydrotreating catalysts.

The approximate average catalyst lives in barrels of feed processed per pound of catalyst is 200 for hydrotreating, 40 for hydrorefining, and 100 for hydrocracking. Since residuum hydroprocesses achieve about 10 barrels processed per pound of catalyst, the growth of residuum processing has increased catalyst demands substantially over the years.

PROCESS DESIGN

Typical Processing Conditions

The conditions under which a hydroprocessing unit operates are a strong function of feedstock. The hydrogen partial pressure must be high enough to accomplish partial saturation of the heavy aromatic molecules. The operating temperature should be sufficiently high to give fast reaction rates but not so high as to promote undesirable side reactions or to exceed the metallurgical limits of the high-pressure vessels. The quantity of catalyst is chosen to

Downloaded from Digital Engineering Library @ McGraw-Hill (www.digitalengineeringlibrary.com)
Copyright © 2004 The McGraw-Hill Companies. All rights reserved.
Any use is subject to the Terms of Use as given at the website.

TABLE 14.1.6 Commercially Available Hydroprocessing Catalysts

Category	No. of suppliers	No. of catalysts	Comments
Hydrotreating (includes hydrogenation and saturation with no hydrocracking)	13	167	Supports are predominantly Al_2O_3. More than 40% are shaped. NiMo is more popular than CoMo. About 7% have noble metals.
Hydrorefining (10% or less hydrocracking)	16	177	About half are for residuum feeds. More than 40% are shaped. NiMo is more popular than CoMo.
Hydrocracking (50% or more hydrocracking)	14	80	About 35% contain zeolites. Mo is more popular than W.
Mild hydrocracking	13	38	NiMo is more popular than CoMo.

Note: Shaped catalysts are those with higher surface/volume ratios than conventional cylinders.
Source: *Oil and Gas Journal,* Worldwide Catalyst Report, Oct. 11, 1993.

Downloaded from Digital Engineering Library @ McGraw-Hill (www.digitalengineeringlibrary.com)
Copyright © 2004 The McGraw-Hill Companies. All rights reserved.
Any use is subject to the Terms of Use as given at the website.

HYDROGEN PROCESSING

give the residence time needed for the reactants to be sufficiently converted at a given operating temperature and pressure.

Typical processing conditions are shown in Table 14.1.7 for a variety of hydroprocesses.[20,99]

Reactor Systems

Light and medium oils are invariably hydroprocessed in reactors containing fixed beds of catalyst. For heavier feedstocks, a wider variety of reactor systems have been developed. They employ smaller catalyst particles in order to take advantage of high reaction rates without diffusion limitations. The more popular reactor systems with particular emphasis on the influence of hydrodynamics on the reaction kinetics are described below.

Fixed-Bed Trickle Reactions. In these reactors both the hydrogen and hydrocarbon streams flow down through one or more catalyst beds. A typical schematic diagram is shown in Fig. 14.1.23. In hydroprocessing reactors,[97] a liquid distributor tray is located at the top. Each bed is followed by a liquid-collecting quenching tray and a liquid distribution tray. In this way liquid distribution is restored after each bed.

It is important both in commercial units and in pilot plants to see that all the catalyst particles are wetted by the hydrocarbon phase. Also, all the hydrocarbon must be in intimate contact with the hydrogen-rich gas phase, to keep a uniform concentration of dissolved hydrogen in the hydrocarbon phase. Satterfield[79] has presented a preliminary correlation relating contacting effectiveness with the liquid flow rate per unit cross-sectional area. He recommends a rate of 5 kg/(m^2·s) to ensure 100 percent contacting. Hofmann[40] summarizes other work devoted to contacting effectiveness. Van Klinken and Van Dongen[96] suggested an inexpensive way to improve catalyst wetting in pilot plants. They dilute the catalyst bed by filling part of the interstitial volume with small inert particles. In commercial operation, loading catalyst by a dense bed loading technique[84] also helps to ensure uniform contacting and has become important with distillate feeds and in particular when reducing sulfur to very low levels (i.e., <10 wppm). Dense loading is less popular with residuum feedstocks because such feeds are more likely to contain solid contaminants.

Besides the problem of achieving good contacting on a small scale, successful scale-up of trickle beds from pilot-plant to commercial scale requires extreme care. Consider, for example, the hydrodynamics of a 1-ft-long pilot-plant reactor compared to those of an 80-ft-long commercial reactor. Imagine both operating at a liquid hourly space velocity of 0.5, an inlet gas rate of 5000 SCFB of feed, and a total pressure of 2000 lb/in^2 gage. For these

TABLE 14.1.7 Typical Hydroprocessing Operating Conditions[20,99]

Process	Hydrogen consumption, SCFB	LHSV	Temperature, °F (°C)	Pressure, lb/in^2 gage
Naphtha hydrotreating	10–50	2–5	500–650 (260–343)	200–500
Light oil hydrotreating	100–300	2–5	550–750 (288–399)	250–800
Medium oil hydrotreating	300–1000	0.5–2.5	600–750 (315–399)	600–1500
Heavy oil hydrotreating	400–1000	1–3	650–800 (343–427)	2000–3000
Residuum hydrotreating	600–1200	0.15–1	650–800 (343–427)	1000–2000
Residuum hydrocracking	1200–1600	0.2–1	750–800 (399–427)	2000–3000
Distillate hydrocracking	1000–2400	0.5–10	500–900 (260–482)	500–3000

Note: LHSV = liquid hourly space velocity.

Downloaded from Digital Engineering Library @ McGraw-Hill (www.digitalengineeringlibrary.com)
Copyright © 2004 The McGraw-Hill Companies. All rights reserved.
Any use is subject to the Terms of Use as given at the website.

HYDROGEN PROCESSING

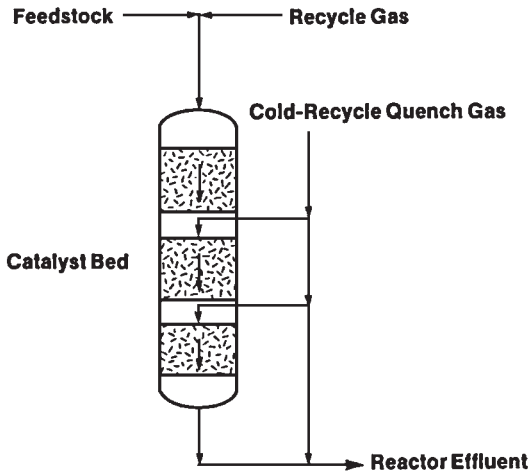

FIGURE 14.1.23 Schematic diagram of trickle-bed reactor.[85]

two systems to show the same extent of reaction, the liquid residence times in each reactor must be the same. The residence times of both fluid phases will, to a first approximation, be proportional to the fraction of the particular fluid held up in the reactors. Table 14.1.8 shows typical values for a trickle bed.

The catalyst particles occupy about 0.65 fraction of the reactor volume. The remaining 0.35 of the volume is in the interstices between the particles. The particles are porous so that the space they occupy can be divided into the volume occupied by the catalyst skeleton and the volume of the internal pores. When oil and hydrogen flow uniformly through a reactor, the oil occupies all the volume in the catalyst pores plus a fraction of the interstitial volume which, in Table 14.1.8, we have assumed to be 0.2×0.35, or 0.07, of the reactor volume. The gas phase flows through the remaining volume. Hydrogen diffuses from this phase into the liquid phase and through it to reach the catalyst internal surface where the reaction takes place.

With these estimates of liquid and gas holdups, the linear velocities of the two fluids and typical reactor pressure drops per foot are as follows:

	Pilot plant	Commercial
Liquid rate, cm/min	0.5	40
Gas rate, cm/min	8	640
Pressure drop, lb/in^2 per foot	0.000002	0.5

Because we are trying to achieve the same reaction rate in reactors differing in length by a factor of 80, the linear velocities differ by this same factor. Since pressure drop ΔP through packed beds is a strong function of linear velocity, the ΔP between the two reactors is extremely large. The pressure drop in the small-scale experiment cannot be measured accurately, since it is dwarfed by reactor end effects. Therefore, small-scale experiments cannot show whether the reactor pressure drop is increasing during a cycle as occasionally happens in commercial units.

As was indicated earlier, it is easier to achieve good contacting at higher linear velocities. Commercial operation is likely to give better results than the pilot plant. If this is not recognized, a refiner may invest more capital in a project than is really needed. Besides the

Downloaded from Digital Engineering Library @ McGraw-Hill (www.digitalengineeringlibrary.com)
Copyright © 2004 The McGraw-Hill Companies. All rights reserved.
Any use is subject to the Terms of Use as given at the website.

HYDROGEN PROCESSING

TABLE 14.1.8 Estimated Phase Holdups in Trickle-Bed Reactors*

	Fraction of reactor space
Catalyst skeleton	0.24
Liquid phase	0.49
Gas phase	0.27

*Assuming extrudate catalyst with ABD = 0.79 g/cm^3 and pore volume = 0.53 cm^3/g, where ABD = apparent bulk density in g/cm^3 of reactor volume.

contacting effect, the amount of liquid held up in the interstices of the bed can be a function of linear velocity. Reaction rates will then be a function of the scale of the experiment. In two-phase flow within fixed beds, different flow regimes can exist, depending on the relative rates of gas and liquid, catalyst characteristics, and the scale of the experiments.[40] In some of these regimes pressure drop pulsing can occur, increasing the mean pressure drop substantially.[92] Hydrodynamic studies using liquids such as kerosene, desulfurized gas oils, and raw gas oils have also experienced foaming.

These complications have taught process developers to extrapolate the results obtained in small-sized pilot plants with great care. Semicommercial plants are usually required to complete the successful scale-up of novel processes.

Moving-Bed Reactors. Every refinery in the world operates at least one fixed-bed hydroprocessing reactor. They are simple and reliable and quite adequate for handling all the distillate feedstocks which need hydrogen addition.

Since the introduction of residuum hydroprocessing, however, limitations in the application of fixed beds have been recognized. Very high nickel plus vanadium levels in feedstocks require more frequent catalyst changeouts, thereby reducing fixed-bed operating factors. Undissolved particulate matter often is present in residuum feedstocks, and this can increase fixed-bed pressure drops and sometimes reduce plant operating factors.

Since heavy, high-metal crude oils generally cost less than light crudes, refiners need this flexibility for handling tougher residua. ChevronTexaco developed a moving-bed reactor to capture a large fraction of residuum feedstock contaminants so that a downstream residuum hydrotreater can achieve long run cycles. Chevron Lummus Global's on-stream catalyst replacement (OCR) process contains a selective hydrodemetalation catalyst which moves intermittently through a high-pressure vessel. Spent catalyst is withdrawn and fresh catalyst is added. The combination of OCR plus fixed-bed residuum hydrotreating gives the refiner the flexibility to vary crude oil purchases to maximize refining margin.

Chevron Lummus Global's OCR process was commercialized in Japan in 1992.[66] A diagram of the OCR system is shown in Fig. 14.1.24.

Ebullating-Bed Reactors. Another approach toward the problems associated with handling heavy residua in a fixed bed has been the use of ebullating-bed reactors. Two residuum hydrocracking processes using ebullating beds have been commercialized. They are the Chevron Lummus Global LC Fining process[16] and the H-Oil process.[24] A schematic diagram of an ebullated-bed reactor is shown in Fig. 14.1.25. In such reactors, both the oil and hydrogen flow upward, and the catalyst is suspended in the liquid in the form of an expanded bed. The characteristics of such a system are compared with those of a fixed-bed reactor in Table 14.1.9, which is based on the work of Kubo et al.[46]

Downloaded from Digital Engineering Library @ McGraw-Hill (www.digitalengineeringlibrary.com)
Copyright © 2004 The McGraw-Hill Companies. All rights reserved.
Any use is subject to the Terms of Use as given at the website.

HYDROGEN PROCESSING

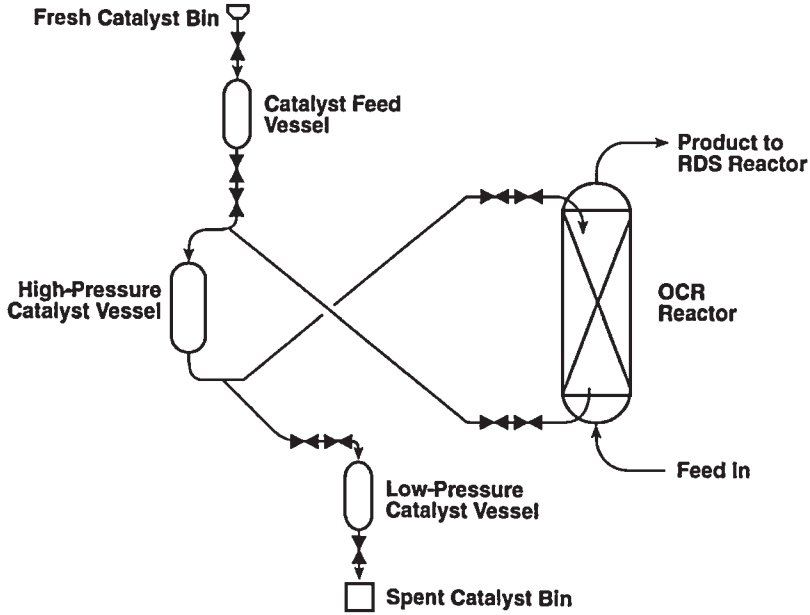

FIGURE 14.1.24 Chevron Lummus Global OCR reactor system.[66]

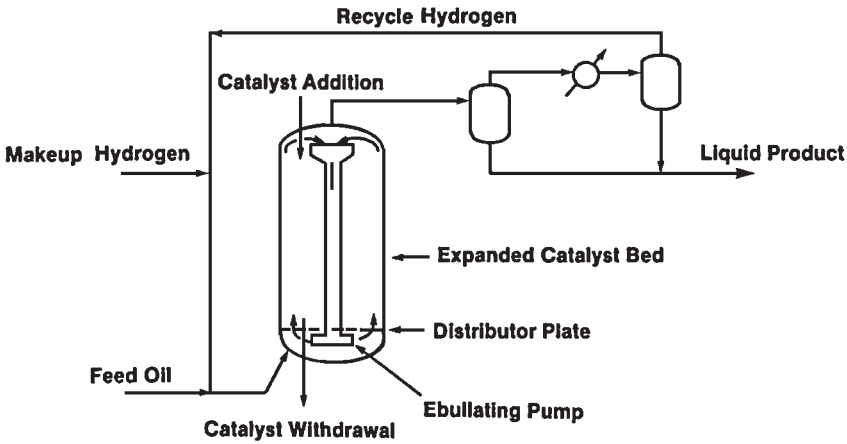

FIGURE 14.1.25 Ebullated-bed reactor.[16]

The hydrodynamics which control the design and operation of ebullating-bed reactors are different from those in trickle beds. The catalyst particles are suspended by the liquid phase, and the gas phase exists as discrete bubbles rising through the liquid.

Slurry Phase Technology. A variety of heavy feedstock hydroconversion processes based on slurry phase operation have been reported.[22] Some of these include the M-Coke

Downloaded from Digital Engineering Library @ McGraw-Hill (www.digitalengineeringlibrary.com)
Copyright © 2004 The McGraw-Hill Companies. All rights reserved.
Any use is subject to the Terms of Use as given at the website.

HYDROGEN PROCESSING

TABLE 14.1.9 Comparison of Ebullated- and Fixed-Bed Reactors for Hydroprocessing[46]

Features	Ebullated bed	Fixed bed
Continuous catalyst replacement	Yes	Yes (with OCR)
Reactor size	Set by conversion/contaminant removal	Set by reaction kinetics
Conversion level per reactor	Limited by back-mixing	Set by reaction kinetics
Catalyst activity	Constant as set by catalyst addition rate	Varies with time
Catalyst temperature	Constant	Varies with time
Temperature distribution	Uniform	Quench gas needed
Product yields, qualities	Constant as set by catalyst equilibrium activity	Varies with time
Pressure drop	Constant	Increases with time
Feedstock treating	None	Desalting, filtering
Residue conversion	Moderate to high	Low
Auxiliary unit design basis	Normal operation	End-of-run operation
Operability down	High on-stream factor, shutdown for inspection	High on-stream factor, shut-for catalyst replacement and/or inspection

process,[6] the Aurabon process,[1] and the CANMET process.[53] These processes are designed to take advantage of the intrinsic activity of even smaller catalyst particles than those used in ebullating beds.

The main reaction appears to be thermally induced in the liquid between these particles. The catalyst hydrogenates the unstable radicals produced in this thermal reaction.

Flow Schemes

Hydrocracking. The versatility of the hydrocracking process has been achieved by developing specific families of catalysts and processing schemes which allow these catalysts to function efficiently. Also, optimum refining relationships between hydrocracking and other refining processes such as catalytic reforming and fluid catalytic cracking are practiced.

The choice of processing schemes for a given hydrocracking application depends on the quality and quantity of feedstock to be processed and the desired product yield structure and quality. Figure 14.1.26 shows a Chevron Lummus Global two-stage ISOCRACKING process flow arrangement. It converts straight-run heavy gas oils into high yields of diesel fuel, jet fuel, or naphtha.

In the first stage the feed is hydroprocessed to saturate heavy aromatics and remove basic impurities such as sulfur and nitrogen. The second stage hydrocracks this product to extinction recycle. The recycle cutpoint (RCP) is selected to maximize the yield of a desired product. Distillation may be placed either between the stages or after the second stage. The intermediate distillation option shown in Fig. 14.1.26 reduces the size of the second stage. The tail end option allows more thorough hydrogenation of the light products.

The most costly part of each stage is the equipment in the high-pressure reactor loop. In this section, the feedstock is pumped to high pressure, mixed with recycle hydrogen, and heated in a shell-and-tube feed/effluent exchanger. The mixture is then passed through a charge furnace and heated to reacting temperature.

Downloaded from Digital Engineering Library @ McGraw-Hill (www.digitalengineeringlibrary.com)
Copyright © 2004 The McGraw-Hill Companies. All rights reserved.
Any use is subject to the Terms of Use as given at the website.

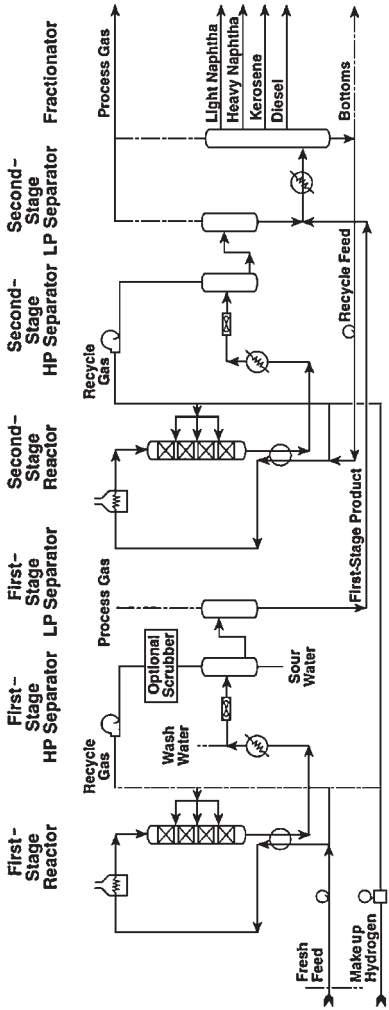

FIGURE 14.1.26 Simplified flow diagram of a Chevron Lummus Global two-stage Isocracker.[12]

Downloaded from Digital Engineering Library @ McGraw-Hill (www.digitalengineeringlibrary.com)
Copyright © 2004 The McGraw-Hill Companies. All rights reserved.
Any use is subject to the Terms of Use as given at the website.

HYDROGEN PROCESSING

The reactor contains many beds of catalyst with quench and redistribution devices between them. The reactor effluent is cooled first in the feed effluent exchanger, then further cooled by exchange with other streams such as the product fractionator feed. Finally, an air cooler brings it to a low enough temperature that the hydrogen flashed off in the high-pressure separator can be recompressed and recycled to the feed. Makeup hydrogen is added to the loop to maintain system pressure. Water is injected into the effluent before the final air cooler in order to prevent ammonium bisulfide from depositing in the colder section of the cooler. The hydrogen-rich stream from the high-pressure separator is recycled to the reactor after being scrubbed for H_2S removal if the feedstock contains a high sulfur level.

The hydrocarbon stream from the high-pressure separator is depressured and sent to the fractionation section after passing through a low-pressure separator in which the hydrogen dissolved in oil is flashed overhead and sent to be recovered. The reactor loop in the second stage is similar in principle, although less expensive construction materials can be used because of much lower H_2S levels present in the streams.

The bottoms product from the high-pressure separator is recycled to feed the second stage. The boiling range of this recycle oil varies, depending on what products are desired from the unit. If a maximum yield of diesel fuel is needed, an RCP of about 700°F is used. If naphtha for aromatics production is in demand, it can be as low as 350°F. In between, jet fuel or catalytic reformer feedstock can be maximized as needed.

There are many variations on flow schemes for two-stage plants. Sometimes the two-phase charge heater is replaced by a single-phase furnace on both hydrogen and hydrocarbon.[16] Sometimes one recycle compressor is used instead of two, in which case the difference in pressure levels in the two stages is small and due only to equipment pressure drops. Speight[85] had summarized the flow schemes of many of the major commercial processes.

Single-stage ISOCRACKING plants have also been widely applied. For feed rates of less than 12,000 barrels per operating day (BPOD) and a need for maximum diesel production, a single-stage recycle plant costs less than the corresponding two-stage plant. The flow scheme for such a unit is like the second stage of Fig. 14.1.26. Other refiners operate single-stage once-through Isocrackers which look like the first stage of a two-stage plant. This configuration is the lowest-cost option and is attractive if the unconverted (but severely hydrotreated) heavy product is of value. This product can be used as FCC or ethylene plant feedstock, LSFO, or lubricating oil base stock.

Hydrocracking of residuum feedstocks can require a different approach to the process flow scheme. As an example, Fig. 14.1.27 shows one of the possible process flow schematics for an LC Finer.[16] The hot reactor effluent is flashed in a hot high-pressure separator, and only the vapor stream is cooled down to provide the hydrogen-rich recycle stream. This option saves energy by allowing the liquid stream from the reactor to go to product fractionation while it is still very hot. It also eliminates problems which could arise in trying to separate the hydrogen stream from the viscous heavy oil at typical cold high-pressure separator temperatures. The unit is equipped with a vacuum column on the product stream. The VGO can therefore be recycled if product values demand it. Note that Fig. 14.1.27 also shows a plant where the liquid and gaseous reactants are heated in separate furnaces. Various plant flow configurations are possible depending on the required conversion and product qualities.

Hydrotreating. In those applications where hydrocracking is less important than contaminant removal or where extinction recycle of the heavy product is not practical (as with residuum from heavy crude oils), then a single-stage once-through type of configuration, like that of the first stage in Fig. 14.1.26, is used. Over the past decade, many variations of this process flow scheme have been developed and are now

Downloaded from Digital Engineering Library @ McGraw-Hill (www.digitalengineeringlibrary.com)
Copyright © 2004 The McGraw-Hill Companies. All rights reserved.
Any use is subject to the Terms of Use as given at the website.

HYDROGEN PROCESSING

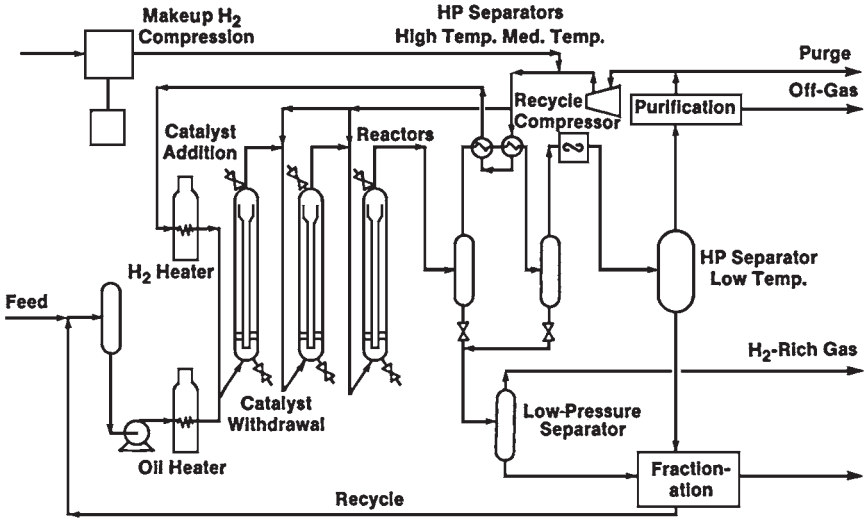

FIGURE 14.1.27 Chevron Lummus Global LC fining process flow sketch.[16]

practiced commercially. Some of these flow schemes have included the use of two cocurrent reactors in series having heat removal (heat exchange and/or quench) and stripping for light ends, hydrogen sulfide, and ammonia removal between reactors. Similarly, two reactors in series, separated by heat removal and stripping with the first reactor being cocurrent and the second reactor being countercurrent, have been applied commercially. The application of such reactor systems and their benefits was discussed in the sections "Hydrogenation-Dehydrogenation Equilibrium" and "Multicatalyst Systems." The ability to remove some of the lighter boiling reaction products, light ends, and hydrogen sulfide/ammonia between reactors, as well as adjusting reaction conditions via temperature change and the introduction of additional hydrogen-rich gas to the system, provides for the ability to optimize the reactor system operation for a given hydroprocessing objective.

Design Considerations

The decisions made during the design of a hydroprocessing unit are all based on economic analyses—balancing changes in capital investment with corresponding but opposing changes in operating costs. In a few cases there is the more difficult choice of deciding whether to invest more capital in order to add flexibility to plant operation. Ongoing economic studies must therefore be made to keep an existing plant operating in the optimum mode. Furthermore, new or revamp unit designs may need to take into consideration the possibility that product specification and/or feedstock quality may change in the future, thus requiring appropriate planning and decision making in the unit's design for such eventualities.

Major Design Decisions. The high-pressure items are the most costly in the plant, so most of the important design decisions concern them. The quantity of catalyst needed and the pressure level of the reactor section are based on knowledge of reaction kinetics,

Downloaded from Digital Engineering Library @ McGraw-Hill (www.digitalengineeringlibrary.com)
Copyright © 2004 The McGraw-Hill Companies. All rights reserved.
Any use is subject to the Terms of Use as given at the website.

HYDROGEN PROCESSING

catalyst deactivation rates, and makeup hydrogen purity. The design pressure level is also influenced by product quality considerations. As shown in Table 14.1.7, heavier feedstocks generally require higher pressures. The quantity of catalyst is chosen to give reasonably low operating temperatures to avoid undesirable side reactions, while providing an adequate operating temperature differential between start-of-run and end-of-run based on the desired catalyst cycle length (time between regenerations in fixed-bed units). In setting such operating temperatures, it is important to stay below the reactor metallurgical limits.

The number of reactors required is based on a variety of considerations:

- The reactor pressure drop must be high enough to promote uniform flow and temperatures but within reason from the point of view of capital investment and operating costs. Once this pressure drop is set, then the total cross-sectional area needed in the reactor section is proportional to the feed rate.
- The refinery may not be able to accept the largest reactors which a fabricator can build. Transporting the reactor to the refinery site may not be possible, in which case field fabrication should be considered. Soil conditions at the refinery may also preclude very heavy reactors.
- The reactor fabricators have limits to the diameter and length of high-pressure vessels.
- In multireactor plants, particularly with residuum feedstocks, it is common to build more than one reactor train. Sometimes the trains are completely independent plants, since this gives the refiner the greatest operating flexibility. In other cases the trains share common feed pumps, high-pressure separators, and recycle compressors.

Energy Conservation. Hydroprocessing reactions are exothermic. The design of a process unit must take maximum advantage of this fact. The feed effluent exchanger must recover as much heat as is economically practical in order to minimize the fuel consumption in the charge furnace or furnaces. An accurate estimate of the heat released in the hydroprocessing reaction is essential to achieve this.

Jaffe[44] has proposed a method for predicting heat release by following the chemical bonds formed and consequent hydrogen consumed by important classes of hydrocarbons. There are three important categories: (1) saturates which consume hydrogen with cracking or ring opening and yield 7 to 10 kcal/mol of hydrogen, (2) aromatics saturation which yields 14 to 16 kcal/mol of hydrogen, and (3) olefins saturation which yields 27 to 30 kcal/mol of hydrogen. The total heat release depends on the distribution of hydrogen consumption between saturates, aromatics, and olefins. Modern analytical techniques can be used in small-scale experiments to determine the concentration of bond types in feedstocks and products. Jaffe obtained good agreement between predicted and measured hydrogen consumptions by this method.

There are other important points that must be considered in the overall heat balance of the plant. Quench hydrogen rates between the catalyst beds should be minimized consistent with safe operation, the ability to maintain the required hydrogen partial pressure, and the desired catalyst life. As in any process unit, air coolers should be as small as possible, and any steam generation should recognize the refinery's overall steam balance.

Both the capital investment costs and operating costs of the recycle compressor are dictated by the reactor loop pressure drop. Designing this loop for too low a pressure drop will result in poor heat-transfer coefficients in the heat exchangers and poor flow patterns within the reactor itself. It is important to calculate accurately what the individual equipment pressure drops will be, as well as what flow regimes exist in them. This is particularly important in the reactor where a high fraction of the overall loop pressure drop occurs.

Hofmann[40] has summarized the correlations proposed for predicting pressure drops in trickle-bed reactors: "At low loadings the pressure drop is approximately the same as in

Downloaded from Digital Engineering Library @ McGraw-Hill (www.digitalengineeringlibrary.com)
Copyright © 2004 The McGraw-Hill Companies. All rights reserved.
Any use is subject to the Terms of Use as given at the website.

HYDROGEN PROCESSING

single-phase gas flow. At higher gas loadings, the texture of the liquid is modified by gas-phase friction, and the pressure drop rises, together with a decrease of the liquid holdup, in the transition to the pulsing flow region." Figure 14.1.28 shows the different flow regimes that have been characterized in air-water systems. The regions are represented on a plot of liquid Reynolds number versus gas Reynolds number. Also shown on the left-hand side is a contacting efficiency relationship similar to that proposed by Satterfield.[79] Talmor[92] has studied the pulsing region, in which pressure drop oscillations occur. He observed that in a partially pulsing situation, the overall reactor pressure drop increases by as much as a factor of 2. Obviously this region should be avoided whenever possible.

Hydrogen Management. Hydrogen is an important commodity in a modern refinery. There are often a variety of sources, each of different purities. Impurities, such as methane in the makeup hydrogen to a hydroprocessing unit, build up in the gas recycle stream until equilibrium develops at the low-pressure separator. The amount of methane dissolved in the liquid effluent equals that coming into the system with the makeup hydrogen plus whatever is produced in the reactor. The effect of this depends on whether a new unit or an existing unit is under consideration. In both cases, the reaction kinetics and catalyst deactivation rate are controlled by the hydrogen partial pressure within the reactor. Impure makeup hydrogen therefore results in new units being built at higher, more costly design pressures. The existing unit's performance is hurt if the makeup hydrogen purity becomes less than design and is helped if its purity can be upgraded. Many approaches have been applied to improve the quality of hydrogen streams so that hydrocrackers and hydrotreaters can operate more profitably. These include the use of pressure-swing absorption[100] and "semipermeable membrane" separators.[9]

***Material*s.** The refining industry has an excellent safety record for operating high-pressure equipment. Special care is placed on the choice of materials of construction, on monitoring the fabrication of critical pieces of equipment, and on using operating procedures which protect the equipment. Most reactors are of the hot-wall variety, and low-alloy steels are required to resist hydrogen attack. Erwin and Kerr[25] have written a comprehensive survey of 25 years of experience with a 2¼ Cr–1 Mo steel in the

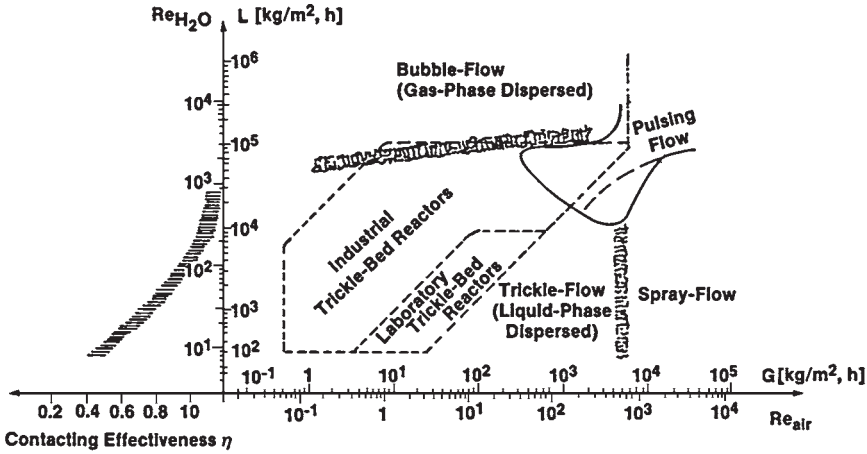

FIGURE 14.1.28 Flow regions in trickle-bed reactors.[40]

Downloaded from Digital Engineering Library @ McGraw-Hill (www.digitalengineeringlibrary.com)
Copyright © 2004 The McGraw-Hill Companies. All rights reserved.
Any use is subject to the Terms of Use as given at the website.

HYDROGEN PROCESSING

thick-wall reactor vessels of the petroleum industry. Start-up and shutdown procedures have been developed to account for both temper embrittlement and hydrogen embrittlement in such steels. Nowadays stronger steels using 3 percent chrome and others that are vanadium-modified are being used for high-pressure vessels.

When used at temperatures above 500°F, 2¼ Cr–1 Mo has inadequate resistance to H_2S corrosion. Corrosion by H_2S in the presence of hydrogen is far more severe than by H_2S alone.[31] To overcome this, the reactors and hot exchanger shells are made with stainless-steel cladding. In addition, reactor internals and hot exchanger tubes are usually made of stainless steel.

Another part of a hydroprocessing facility which is subject to corrosion is the high-pressure air coolers where H_2S and ammonia exist in the presence of water. Piehl[71] has studied this problem and suggested design and operating guidelines to overcome it.

Emergencies. Design and operating procedures have been developed to minimize temperature runaways within hydroprocessing reactors and to take proper action should one start.

Local hot spots are occasionally seen in such reactors. Jaffe[45] has explained them in terms of regions of low flow. He developed a mathematical model which accounts for the temperature rise with rapid reaction of the fluid in the affected region and for temperature drop with the eventual mixing of cooler fluid from the surrounding region. By comparing the model with commercial temperature profiles, he estimated the velocity of the low-flow region and its lateral extent. The cause of a low-flow region could be the presence of catalyst fines, a physical obstruction, or a failure of the reactor internals.

One of the most serious operating problems for a hydrocracker is an unexpected recycle compressor shutdown. The loss of gas flowing through the reactor results in a sudden increase in the catalyst temperature, since the heat of reaction cannot be transported out of the reactor. Effective procedures have been worked out for handling such a situation. With reference to Fig. 14.1.29, which shows the normal hydrocracker controls, they involve bypassing the feed/effluent exchangers, cutting the charge furnace fires, and possibly stopping the makeup hydrogen flow. Gerdes et al.[33] have described the results of a hydrocracker simulator designed to train operators to handle such emergency situations.

PROCESS CAPABILITIES

Hydrogen Utilization

Except at very low hydrogen consumptions, hydroprocessing results in a volume expansion from feed to product. Figure 14.1.30 shows this for a heavy distillate feedstock in a variety of hydroprocessing situations.[82] The plot shows the percent expansion for the C_5+ product versus the chemical hydrogen consumption. Below a consumption of 500 SCFB, the data points were taken in a hydrotreating mode where selective desulfurization is carried out at relatively lower hydrogen partial pressures (see "Typical Processing Conditions" above). A volume shrinkage occurs with the first increment of hydrogen consumed since the initial removal of sulfur is more significant than the production of light products.

Those refiners that have practiced mild hydrocracking in existing VGO hydrotreaters by using catalyst combinations with greater acidity have seen the extra hydrogen consumption result in greater volume expansion increase, as shown in Fig. 14.1.30. The pressure levels in these units do not allow more hydrogen input because the hydrogenation-dehydrogenation equilibrium limits the desired reaction. At higher pressures, however, substantial hydrocracking can occur so that a once-through hydrocracker

Downloaded from Digital Engineering Library @ McGraw-Hill (www.digitalengineeringlibrary.com)
Copyright © 2004 The McGraw-Hill Companies. All rights reserved.
Any use is subject to the Terms of Use as given at the website.

HYDROGEN PROCESSING

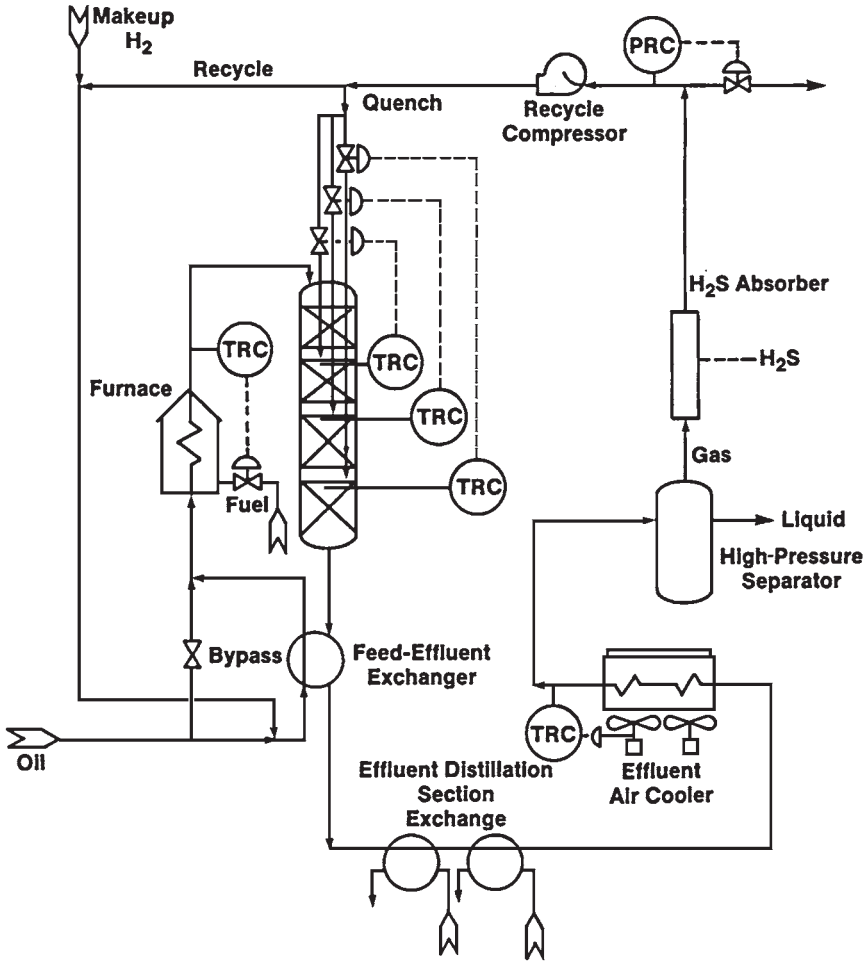

FIGURE 14.1.29 Control of a hydrocracker.[33]

on this same feed can consume 1200 SCFB of hydrogen and make 108 volumes of C_5+ product out of 100 volumes of VGO feed. The maximum volume expansion is achieved in a recycle mode operating at an RCP of 700 to 735°F (which maximizes diesel fuel yield). More hydrogen can be consumed in a recycle hydrocracker if the RCP is dropped so that lighter products are made. An RCP of 550°F maximizes the production of jet fuel while consuming about 2000 SCFB of hydrogen. Motor gasoline yield is maximized at 380°F RCP and aromatics (via catalytic reforming) at somewhat lower RCP.

With more aromatic feedstocks, the amount of hydrogen consumed and the amount of expansion will be higher than shown. Scott, Mayer, and Meyer[83] have taken this representation even further by assuming the heavy naphtha produced by hydrocracking will usually be catalytically reformed, so that some hydrogen will be recovered. Also, the light gases produced in the hydrocracker can be used as feedstock to a hydrogen plant. Therefore they

Downloaded from Digital Engineering Library @ McGraw-Hill (www.digitalengineeringlibrary.com)
Copyright © 2004 The McGraw-Hill Companies. All rights reserved.
Any use is subject to the Terms of Use as given at the website.

HYDROGEN PROCESSING

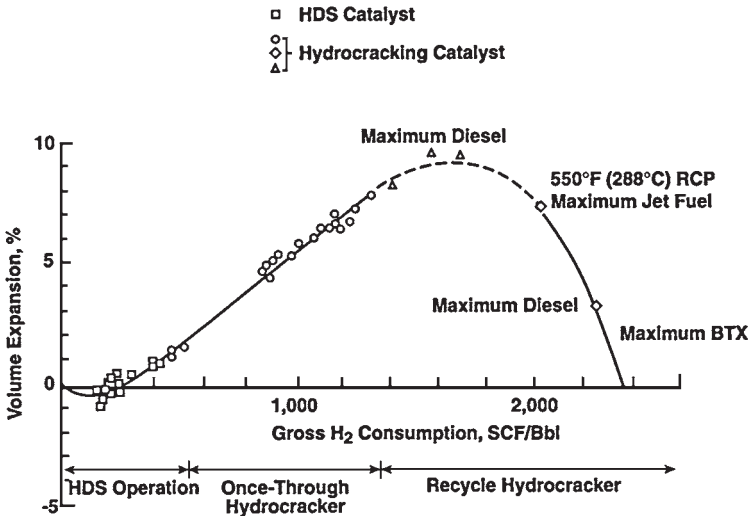

FIGURE 14.1.30 Hydroprocessing Mideast vacuum gas oils.[82]

are a potential source of hydrogen. If this is accounted for and net hydrogen consumption is the focus instead of the amount used in the hydrocracker, a more complete measure of hydrogen efficiency is given.[83]

Table 14.1.10 shows in tabular form the product yields which correspond to the hydroprocesses covered in Fig. 14.1.30. Again, these are based on experiments with Middle Eastern VGOs. Note that these are just examples of yield structures designed to show what is possible in hydroprocessing. Variations on these yields occur by using different catalysts, process configurations, or operating conditions. No correlation exists which allows a priori prediction of product yields. Experimental data are needed to support predictions and extrapolations.

Product Qualities

Light Oil Hydrotreating. A large percentage of the worldwide hydrotreating capacity is applied to light oil feedstocks. Table 14.1.11 shows performance on straight-run naphtha and a blend of both straight-run and coker gasoline. These feedstocks need to be desulfurized and denitrified so that a catalytic reformer can upgrade them effectively. Hydrogen consumption is less than 100 SCFB.

Table 14.1.12 shows performance with kerosene fuel, diesel fuel, and cracked heating oil. Kerosene is hydrotreated to remove sulfur and improve color and color stability. The same objectives exist in treating diesel. However, with diesel fuel, producing a clean-burning fuel with less likelihood of emulsification if accidentally contacted by water is also important. Sometimes units are built to treat wide-boiling-range distillates. If so, it may be necessary to overtreat the diesel fraction to obtain satisfactory color stability on the kerosene. Generally this is not a severe penalty because the additional hydrogen requirement is modest and incremental operating costs are small. The cracked heating oil in the

Downloaded from Digital Engineering Library @ McGraw-Hill (www.digitalengineeringlibrary.com)
Copyright © 2004 The McGraw-Hill Companies. All rights reserved.
Any use is subject to the Terms of Use as given at the website.

TABLE 14.1.10 Product Yields in Mideast VGO Hydrotreating

Process	VGO Hydrotreating	Hydrocracking			
		Once-through	Recycle	Recycle	Recycle
Recycle cutpoint, °F (°C)			725 (385)	550 (288)	380 (193)
Product yields:					
C_1–C_3, wt %	0.09	0.63	2.5	3.0	2.64
C_4s, wt %	0.01	0.83	2.4	9.1	14.07
Light naphtha, °F (°C)		C_5–180 (C_5–82)	C_5–180	C_5–180	C_5–180
Yield, LV %		2.0	6.6	15.1	32.7
Heavy naphtha, °F (°C)	C_5–350 (C_5–177)	180–310 (82–154)	180–250	180–280	180–380
Yield, LV %	0.2	5.5	7.1	22.5	68.8
Middle distillate, °F (°C)	350–550	310–655 (154–346)	250–725	280–550	
Yield, LV %	7.1	35.5	96.8	68.8	
Heavy product, °F (°C)	650+ (343+)	655+ (346+)	725+ (385+)	550+ (288+)	380+ (193+)
Yield, LV %	93.0	61.6	0	0	0
Chemical hydrogren consumption, SCFB	300	1135	1250	1350	1650

Note: LV % = liquid volume percent.
Source: ChevronTexaco Research pilot-plant data.

Downloaded from Digital Engineering Library @ McGraw-Hill (www.digitalengineeringlibrary.com)
Copyright © 2004 The McGraw-Hill Companies. All rights reserved.
Any use is subject to the Terms of Use as given at the website.

HYDROGEN PROCESSING

TABLE 14.1.11 Hydrotreating of Naphthas[5]

Feedstock character	Straight run	Coker/straight-run blend
Density, °API	61.1	52.9
ASTM D 86, °F (°C):		
IBP	189 (87)	195 (91)
10	198 (92)	232 (111)
50	245 (119)	300 (149)
90	300 (149)	400 (204)
EP	329 (165)	400 (204)
Sulfur, wt %	0.035	0.14
Nitrogen, ppm		35
Bromine number, g/100 g		10
Hydrogen consumption, SCFB	20	90
Product quality:		
Sulfur, wt %	0.0001	0.0001
Nitrogen, ppm		1
Bromine number, g/100 g		<1
Product yields:		
H_2S, SCFB	1	45
C_1–C_3, SCFB	4	4
C_4, LV %	0.1	0.1
C_5, LV %	0.1	0.2
C_6+, LV %	99.8	99.9

Note: °API = degrees on American Petroleum Institute scale; IBP = initial boiling point; EP = endpoint.

example is a blend of FCC heavy gasoline and light cycle oil. The objective is sulfur removal to make the oil acceptable for LSFO use.

Low-aromatic low-sulfur diesel fuel is now produced in many parts of the world in response to stricter environmental legislation. In such applications, middle distillates that can potentially include straight-run AGO, FCC light cycle oil, coker light gas oil, visbreaker light gas oil, and/or light vacuum distillate are hydrotreated to reduce sulfur to low levels ranging from <10 wt ppm to 50 wt ppm for the production of low-sulfur diesel. In addition, hydrotreating is used to increase the cetane of such middle distillates via selective ring opening and aromatics saturation. In some applications, reduced levels of polynuclear aromatics ranging from 1 to 6 wt % and even total aromatics reduction to <5 wt % have been achieved. Depending on the choice of catalysts and reactor system configuration, these various objectives can and have been achieved commercially, as well as the improvement of cold flow properties if required by a specific application for diesel hydrotreating.

Light Oil Hydrocracking. One of the first applications of modern hydrocracking was the conversion of naphtha to liquefied petroleum gas.[81,99] Nowadays the economics for such a conversion are generally poor. However, the process is commercially practiced. Typical yields are shown in Table 14.1.13 for extinction recycle Unicracking[99] of a Kuwait naphtha. The total yield of propane and butane is over 135 LV % of feed. Hydrogen consumption to achieve this is 2060 SCFB.

Naphtha can also be hydrocracked to produce isobutane. This can then be used as feedstock to alkylation units for producing high-octane mogas components. Table 14.1.14 illustrates the yields of isobutane obtained by hydrocracking a light straight-run gasoline,

Downloaded from Digital Engineering Library @ McGraw-Hill (www.digitalengineeringlibrary.com)
Copyright © 2004 The McGraw-Hill Companies. All rights reserved.
Any use is subject to the Terms of Use as given at the website.

HYDROGEN PROCESSING

TABLE 14.1.12 Hydrotreating of Light Oils[5]

Feedstock	Kerosene	Diesel	Cracked heating oil		
Density, °API	40.8	33.8	27.0		
ASTM D 86, °F (°C):					
IBP	384 (196)	451 (232)	328 (165)		
10	397 (202)	511 (267)	377 (192)		
50	425 (218)	580 (304)	438 (226)		
90	487 (252)	637 (336)	535 (280)		
EP	523 (273)	680 (360)	617 (325)		
Sulfur, wt %	0.2	1.85	1.3		
Nitrogen, ppm	3	400	9330		
Smoke point, mm	19				
Bromine number, g/100 g			25.0		
Hydrogen consumption, SCFB	30	175	355		
Liquid product, °F (°C)	390+ (199+)	450+ (232+)	310–410 (154–210)		410+ (210+)
Yield, LV %	98.8	98.3	38.4	58.9	
Sulfur, wt %	0.04	0.15	0.0045	0.044	
Nitrogen, ppm	1				
Smoke point, mm	20				
Color, Saybolt	+29				
Color stability, 16 h at 212°F (100°C)	+26				

a Udex raffinate, and a reformer feedstock. In all cases over 45 percent of isobutane was obtained with propane, the next most abundant product.

Heavy Distillate Hydrotreating. In the 1960s, as more high-sulfur Middle Eastern crudes were processed in the world's refineries, hydrodesulfurization facilities were added to produce the LSFO that local and national governments were demanding. This was particularly the case in Japan. In the United States, some companies decided to invest immediately in direct atmospheric residuum hydrotreating plants. Others took advantage of the fact that LSFO sulfur specifications were going to drop according to a fixed timetable. These refiners built in stages—VGO hydrotreaters at first, the product from which was blended with the virgin vacuum residuum to meet the specifications for the immediate future. Later the vacuum residuum was upgraded so that the long-term specifications could be achieved. The VGO hydrotreaters were designed to remove at least 90 percent of the feed sulfur with minimum hydrogen consumption. Most were designed at 600 to 1000 lb/in^2 hydrogen partial pressure.[28]

Today's refiner is faced with the need to convert the heavier components of the crude barrel into lighter, more valuable products.[32] An inexpensive and immediate step to improve heavy oil conversion has been to convert the operation of VGO hydrotreaters to VGO mild hydrocrackers. Table 14.1.15 consists of commercial data showing three different types of operation achieved in the same ChevronTexaco VGO hydrotreater.[28] Conventional desulfurization is compared with severe desulfurization (achieved by accepting a reduction of catalyst life). Both are then compared with a mild hydrocracking operation using a blend of desulfurization and hydrocracking catalysts. The yield and quality of diesel produced can be varied by operating at different conversions. Figure 14.1.31 shows this variation. Note that synthetic conversion is total conversion corrected for the light straight-run distillate material in the feed. Incremental conversion by mild hydrocracking preferentially produces diesel fuel.

Downloaded from Digital Engineering Library @ McGraw-Hill (www.digitalengineeringlibrary.com)
Copyright © 2004 The McGraw-Hill Companies. All rights reserved.
Any use is subject to the Terms of Use as given at the website.

HYDROGEN PROCESSING

TABLE 14.1.13 Hydrotreating for LPG Production[99]

Feedstock—Kuwait naphtha:	
Density, °API	55
Sulfur, wt %	0.097
Nitrogen, ppm	1
ASTM D 86, °F (C°)	
10	250 (121)
50	310 (154)
90	381 (195)
EP	416 (214)
Hydrogen consumption, SCFB	2060
Product yields, LV %	
Propane	77
Butane	62
Total LPG	139

TABLE 14.1.14 Hydrocracking for Isobutane Production[99]

Feedstock	Udex raffinate	Light straight-run gasoline	Reformer feedstock
Density, °API	69	68	53
Sulfur, ppm	7	5	3
Nitrogen, ppm	<1	<1	<1
ASTM D 86, °F (°C):			
10	209 (98)	216 (102)	244 (118)
50	220 (104)	232 (111)	289 (142)
90	252 (122)	263 (129)	351 (178)
EP	288 (142)	294 (146)	382 (194)
Isobutane yield, LV %	49–54	50+	45–50

Heavy Distillate Hydrocracking. A single-stage once-through hydrocracker can achieve higher conversions to lighter products than the lower-pressure units which were originally designed for desulfurization.[34] Table 14.1.16 shows ISOCRACKING process product yields[77] at three different conversion levels—40, 55, and 70 percent below 640°F. In this table the yields are expressed by two different sets of product cutpoints to show the flexibility for varying the relative motor gasoline to diesel fuel yields. With this Arabian Light VGO feedstock, the diesel yield peaks at the lower conversions. At the 70 percent level, the diesel yield has dropped because some of it has been converted to naphtha. At all conversion levels, the ratio of gasoline to diesel can be varied by about a factor of 2 by adjusting product cutpoints.

The product inspections are shown for the gasoline and diesel cuts in Table 14.1.17. The 180 to 390°F cut naphtha produced at 70 percent conversion is a high-quality reformer feed because of its high naphthene and aromatics content. The 640°F+ bottoms stream is a unique product. It not only is an ultralow-sulfur blendstock for fuel oil but a prime feed component to the FCC unit, a superb source of lube oil base stock, and an attractive ethylene plant feed.

Table 14.1.18 shows the heavy product quality at about 50 percent conversion. Inspections are presented for the 700°F+ portion of this bottoms stream, before and after

Downloaded from Digital Engineering Library @ McGraw-Hill (www.digitalengineeringlibrary.com)
Copyright © 2004 The McGraw-Hill Companies. All rights reserved.
Any use is subject to the Terms of Use as given at the website.

HYDROGEN PROCESSING

TABLE 14.1.15 ChevronTexaco VGO Hydrotreating and Mild Hydrocracking[28]

Operation	Conventional desulfurization	Severe desulfurization	Mild ISOCRACKING
% HDS	90.0	99.8	99.6
Yields, LV %:			
Naphtha	0.2	1.5	3.5
Light isomate	17.2	30.8	37.1
Heavy isomate	84.0	70.0	62.5
Feed:			
Density, °API	22.6	22.6	23.0
Sulfur, wt %	2.67	2.67	2.57
Nitrogen, ppm	720	720	617
Ni + V, ppm	0.2	0.2	—
Distillation, ASTM, °F (°C)	579–993 (303–534)	579–993 (303–534)	552–1031 (289–555)
Light isomate			
Density, °API	30.9	37.8	34.0
Sulfur, wt %	0.07	0.002	0.005
Nitrogen, ppm	90	20	20
Pour point, °F	18	14	18
Cetane index	51.5	53.0	53.5
Distillation, ASTM, °F (°C)	433–648	298–658	311–683
Heavy isomate			
Density, °API	27.1	29.2	30.7
Sulfur, wt %	0.26	0.009	0.013
Nitrogen, ppm	400	60	47
Viscosity, cSt at 122°F (50°C)	26.2	19.8	17.2
Distillation, ASTM, °F (°C)	689–990	691–977	613–1026

Note: HDS = hydrodesulfurization.

dewaxing. Lube oil base stocks with viscosity indexes of 110 to greater than 120 can be obtained depending on the conversion level. In 1985, Chevron U.S.A. started up a lube oil complex based on the Chevron Lummus Global's ISOCRACKING process.[26] In connection with this lube oil hydrocracking complex, ChevronTexaco upgraded its dewaxing facilities by installing Chevron Lummus Global's catalytic dewaxing process, ISODEWAXING.[103] This process isomerizes the wax to make higher yields of high-viscosity-index base stocks. It allows the combination of hydrocracking and ISODEWAXING/hydrofinishing to produce unconventional lubes with viscosity indexes greater than 130.[55]

For ethylene plant feedstock, the product at 70 percent conversion is more attractive. The high paraffin and naphthenic content of this product is consistent with a Bureau of Mines Correlation Index (BMCI) of about 10. This type of feed should produce a high yield of ethylene and a low yield of pyrolysis fuel oil.

In cases where the bottoms product has low value, and during periods of low crude run when the hydrocracker feed rate is less than design, the unit can be run in a partial or total recycle mode. This shifts the product slate more toward diesel than gasoline. Table 14.1.19 compares the yields obtained in a once-through operation using gasoline mode cutpoints to a total recycle mode operating to maximize diesel fuel.

The hydrocrackers operating in North America upgrade feed blends containing a variety of cracked feedstocks (for example, FCC cycle oils[81] and both delayed[10] and fluid coker gas oils[48]). These feeds give more aromatic products than a corresponding straight-run feed would give. Jet fuel smoke point suffers slightly, but motor gasoline quality is better.

Downloaded from Digital Engineering Library @ McGraw-Hill (www.digitalengineeringlibrary.com)
Copyright © 2004 The McGraw-Hill Companies. All rights reserved.
Any use is subject to the Terms of Use as given at the website.

HYDROGEN PROCESSING

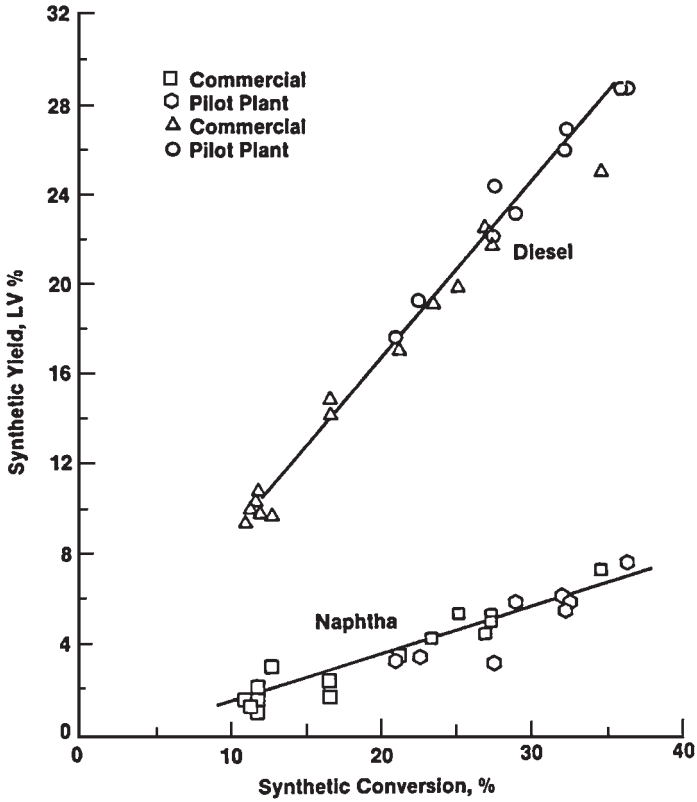

FIGURE 14.1.31 Distillate product yields—VGO mild ISOCRACKING.[28]

Operation with high-endpoint cracked stocks has been noticed to cause heavy polycyclic aromatics to precipitate out in the air coolers in recycle operation.[48]

While in many cases straight-run VGO is still the predominant hydrocracker feedstock, the need to process blends of straight-run and cracked feedstocks, as well as to coprocess FCC light cycle oil, to produce clean fuels is becoming more common. The most popular operating mode is to maximize middle distillate production. Catalysts are available which can produce over 95 LV % of good-quality middle distillates from recycle hydrocrackers.[12,54,68] Typical yields and product qualities for such an ISOCRACKING operation are given in Table 14.1.20. The feedstock was 700 to 1000°F straight-run Arabian VGO. The operation produces a yield of 47.9 percent kerosene and 48.9 percent diesel, both meeting normal specifications. Achieving selectivity for middle distillate production depends on a large number of factors including the process configuration, the choice of catalyst, the feedstock to be used, and a number of other design parameters.[12] Amorphous catalysts give higher middle distillate yields than catalysts which contain zeolite components. Highly paraffinic feedstocks give lower yields than less paraffinic ones.

Besides these characteristics of the reactor section, various aspects of the product fractionation section can affect the yield and quality of the middle distillate products. Figure 14.1.32 shows what can be achieved by varying the cutpoint between jet and diesel while keeping the jet initial cutpoint at flash point specification and the RCP at 725°F. Varying

Downloaded from Digital Engineering Library @ McGraw-Hill (www.digitalengineeringlibrary.com)
Copyright © 2004 The McGraw-Hill Companies. All rights reserved.
Any use is subject to the Terms of Use as given at the website.

HYDROGEN PROCESSING

TABLE 14.1.16 Single-Stage ISOCRACKING Yields* for Gasoline and Diesel Production[77]

	Conversion level, LV %		
	40	55	70
Chemical H_2 consumption, SCFB	1050	1200	1350
Yields (gasoline mode), LV %:			
C_5–180°F (C_5–82°C)	5.0	9.0	16.0
180–390°F (82–199°C)	13.0	24.0	36.5
390–640°F (199–338°C)	26.0	27.0	23.5
640°F+ (338°C+)	60.0	45.0	30.0
Gasoline/diesel ratio	0.7	1.2	2.2
Yields (diesel mode), LV %:			
C_5–180°F (C_5–82°C)	5.0	9.0	16.0
180–310°F (82–154°C)	7.0	15.0	23.0
310–655°F (154–346°C)	34.0	38.0	35.5
655°F+ (346°C+)	58.0	43.0	31.5
Gasoline/diesel ratio	0.4	0.6	1.1

*Arabian Light VGO feed (670–1020°F, 354–549°C); converted below 640°F.

TABLE 14.1.17 Single-Stage ISOCRACKING Light Product Qualities*[77]

	Product cut		
Inspection	C_5–180°F (C_5–82°C)	180–390°F (82–199°C)	390–640°F (199–338°C)
Density, °API	81	51.5	38
Aniline point, °F		114	143
Paraffins, vol %		37	36
Naphthenes, vol %		48	37
Aromatics, vol %		15	27
Pour point, °F			−20
Octane, F-1 clear	80.5	61	

*Arabian Light VGO feed (670–1020°F, 354–549°C); 70 percent conversion below 640°F.

this intermediate cutpoint from 450 to 550°F gives a range of jet/diesel production ratios from 0.5 to 1.2.

The paraffinicity of the feedstock is even more critical if aromatics are a desired product. Table 14.1.21 shows the typical yields of naphthenes plus aromatics (N + A) in hydrocracker naphthas as a function of fresh feed quality.[52] Ring content of the feed is roughly indexed by its UOP characterization factor (UOP K). For low UOP K factors (high feed ring contents), the yields of benzene, toluene, and xylene (BTX) precursors become very high, reaching 69 to 77 vol % of feed for C_6-C_8/C_6-C_9 N + A from a 9.96 UOP K steam-cracked gas oil. The most paraffinic feedstock shown gives yields of only 22 to 27 vol %.

Residuum Hydrotreating. As shown in Fig. 14.1.16, the product from a residuum hydrotreater becomes lighter from SOR to EOR if the product sulfur level is held

Downloaded from Digital Engineering Library @ McGraw-Hill (www.digitalengineeringlibrary.com)
Copyright © 2004 The McGraw-Hill Companies. All rights reserved.
Any use is subject to the Terms of Use as given at the website.

HYDROGEN PROCESSING

TABLE 14.1.18 Single-Stage ISOCRACKING Heavy Product Qualities*[77]

Conversion level, LV %	50	50	70
Product boiling range, °F+ (°C+)	700 (371)	700 (371)	640 (338)
Dewaxed	No	Yes	No
Density, °API	34.8		38.7
Aniline point, °F (°C)			229 (109)
Pour point, °F (°C)	95 (35)	5 (−15)	80 (27)
Paraffins, vol %	37.3	30.0	62.5
Naphthenes, vol %	52.1	58.4	30.8
Aromatics, vol %	10.6	11.3	6.7
Sulfur, ppm			15
Viscosity, cSt:			
At 100°F (38°C)		30.6	
At 210°F (99°C)		5.32	3.3
Viscosity index		118	
ASTM D 1160, °F (°C):			
IBP	700 (371)		675 (357)
10	755 (402)		700 (371)
50	805 (430)		733 (390)
90	933 (501)		820 (438)
EP	965 (519)		960 (516)

*Arabian Light VGO feed (670–1020°F, 354–549°C); 70 percent conversion below 640°F.

TABLE 14.1.19 ISOCRACKING Yield Comparison—Once-Through versus Recycle*[77]

Type of operation	Once-through	Recycle
Conversion below 640°F, (338°C), LV %	70	
Per pass conversion, LV %		50
Recycle cutpoint, °F (°C)		650
Yields:		
Gasoline, LV %		
C_5–390°F (C_5–199°C)	52.5	
C_5–310°F (C_5–154°C)		43.0
Diesel fuel, LV %		
390–640°F (199–338°C)	23.5	
310–650°F (154–343°C)		64.0
Bottoms product, LV %	30.0	
Gasoline/diesel ratio	2.2	0.7

*Arabian Light VGO feed (670–1020°F, 354–549°C).

constant. This product yield structure variation is shown in Table 14.1.22 for a Kuwait vacuum residuum feedstock.[17] Saito,[78] with help from Chiyoda Corporation, has described experience with operating the Okinawa Oil Company Gulf–designed residuum hydrotreater at a consistently high hydrocracking conversion. Product yields are plotted versus 1000°F conversion in Fig. 14.1.33. Unstable fuel oil production was observed at high conversions. A sludge formed which limited the maximum conversion that could be achieved with a particular feedstock because it deposited in flash drums, the fractionator, the product rundown heat exchangers, and product lines.

Downloaded from Digital Engineering Library @ McGraw-Hill (www.digitalengineeringlibrary.com)
Copyright © 2004 The McGraw-Hill Companies. All rights reserved.
Any use is subject to the Terms of Use as given at the website.

HYDROGEN PROCESSING

TABLE 14.1.20 Two-Stage ISOCRACKING Middle Distillate Yields and Qualities*[12]

Product cut, °F (°C)	C_5–180 (C_5–82)	180–250 (82–121)	250–525 (121–274)	525–725 (247–385)
Yields, LV %	6.6	7.1	47.9	48.9
Density, °API	80.5	60.8	45.4	39.4
Octane, F-1 clear	76	68		
Paraffin/naphthenes/aromatics, vol %		46/50/4	25/64/11	
Smoke point, mm		25		
Flash point, °F (°C)		100 (38)		
Freeze point, °F (°C)		−75 (−59)		
Pour point, °F (°C)			−10 (−23)	
Cloud point, °F (°C)			0 (−18)	
Aniline point, °F °C)			180 (82)	
Diesel index			69	
Cetane number			61	
Viscosity at 122°F, (50°C), cSt			5.3	

*Feedstock 700–1000°F (371–538°C) Arabian VGO.

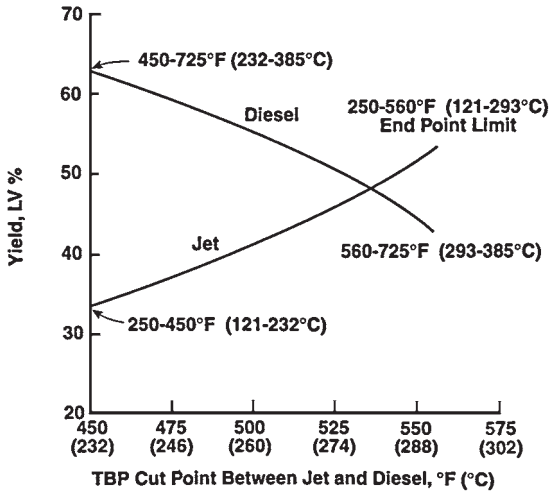

FIGURE 14.1.32 Estimated Chevron ISOCRACKING yields, ICR 120—effect of changing cutpoint on jet and diesel production (constant total jet plus diesel).[12]

The product qualities which were achieved at 43 percent conversion are shown in Table 14.1.23.

Residuum hydrocracking has been practiced commercially in ebullating-bed reactors in which product qualities can be kept constant by batchwise replacing a small fraction of the catalyst inventory on an ongoing basis. Some example product yields and qualities are shown in Table 14.1.24 for both long and short residuum feedstocks.[16]

Downloaded from Digital Engineering Library @ McGraw-Hill (www.digitalengineeringlibrary.com)
Copyright © 2004 The McGraw-Hill Companies. All rights reserved.
Any use is subject to the Terms of Use as given at the website.

HYDROGEN PROCESSING

TABLE 14.1.21 Ring Content of Hydrocracker Naphtha[52]

Fresh feed:						
UOP K factor	9.69	10.22	11.40	11.79	11.89	12.45
50% point, °F (°C)	477 (247)	484 (251)	665 (352)	814 (435)	784 (418)	716 (380)
Unicracker stages	1	1	1	2	1	2
Noble metal catalyst	No	Yes	No	No	Yes	Yes
Product naphtha boiling range, °F (°C)	150–348 (66–176)	150–334 (66–168)	150–373 (66–190)	150–360 (66–182)	150–352 (66–178)	150–340 (66–171)
N + A, yield in C_6–C_8	68.8	61.2	39.7	29.4	30.8	21.7
N + A, yield in C_6–C_9	76.6	71.1	52.7	40.9	40.0	27.4
N + A, yield in total naphtha	83.7	74.4	60.5	49.9	44.8	28.5

Note: N + A yields are shown as LV % of fresh feed.

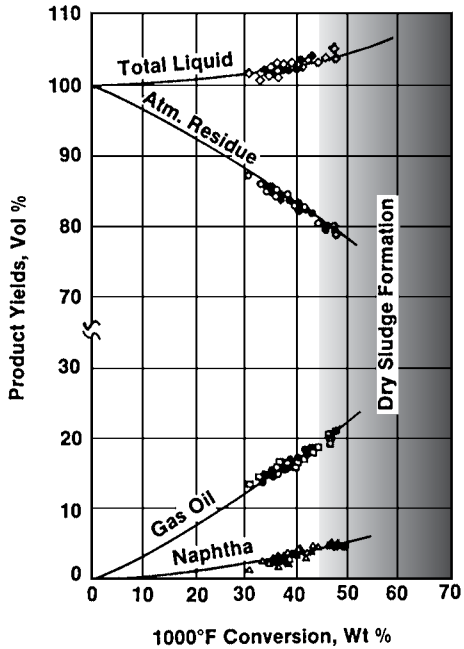

FIGURE 14.1.33 Conversion versus product yields—residuum hydrotreating.[78]

Catalyst Consumption

As feedstocks have become heavier, catalyst consumption per barrel of feedstock has increased. With residuum hydroprocessing, the cost of the catalyst is a significant operating expense. During the scoping studies and the design of a new unit, then, it is important that catalyst life be predicted accurately so that the size of the reactor and its pressure level are well chosen. Improved catalysts and improved catalyst combinations are continually being developed. These catalysts are tested in long pilot-plant runs, and the data have been correlated with other pilot-plant and commercial experience. Nelson[59] has provided

Downloaded from Digital Engineering Library @ McGraw-Hill (www.digitalengineeringlibrary.com)
Copyright © 2004 The McGraw-Hill Companies. All rights reserved.
Any use is subject to the Terms of Use as given at the website.

HYDROGEN PROCESSING

TABLE 14.1.22 Effect of Operating Temperature on VRDS Hydrotreating Yields[17]

	VRDS start-of-run 1050°F+ (566°C+)	VRDS end-of-run 1050°F+ (566°C+)
Feed	Kuwait	Kuwait
Product		
C_1–C_4, wt %	0.6	3.8
C_5–350°F, LV % (C_5–177°C)	1.3	5.1
350–650°F, LV % (177–343°C)	2.8	20.8
650–1050°F, LV % (343–566°C)	12.8	32.9
1050°F+, LV % (566°C+)	86.1	44.7
H_2 consumption, SCFB	1180	1320

Note: VRDS = vacuum residuum desulfurization.

general information on this subject, and Fig. 14.1.34 shows his estimated catalyst consumptions for a number of residuum feedstocks at different fuel oil sulfur levels. As one would expect, the nickel and vanadium level in the feedstocks is an important parameter.

Nelson[58] has also commented on another important phenomenon which can limit catalyst life—catalyst bed plugging. This can occur in any fixed-bed reactor within a refinery, since feedstocks are often fed from tanks in which solids can accumulate. Also, shutdowns and start-ups for maintenance can disturb corrosion scale and introduce it to the hydroprocessing feed system. With residuum feeds, however, catalyst bed plugging is much more likely. To counter it, crude oil is commonly double-desalted, and the hydroprocessing feedstock is filtered in a sophisticated unit having backflush capabilities.

With some feedstocks, particularly the naphthenic ones from California crude oils, even these precautions are insufficient. ChevronTexaco's Richmond, California, deasphalted oil (DAO) hydrotreater, which has processed a California deasphalted oil containing 33 ppm nickel plus vanadium plus iron since 1966, has seen regular plugging problems because of the reactive soluble iron in the feed.[14] The effect on unit operating factor has not been serious, however, because of improvements in catalyst grading and because the plant was designed with two trains which can be operated independently. Refiners and specialist contractors have developed techniques for unloading fixed-bed reactors quickly and safely. Sometimes when bed plugging has occurred, only the upper bed or beds are skimmed[63] so that the lower catalyst, which is still active, can still be used.

It is instructive to analyze the spent catalyst taken from a residuum hydrotreating unit. Table 14.1.25 shows carbon, nickel, vanadium, and iron levels found[74] after a run in which catalyst consumption corresponded to 14.9 barrels of feed per pound of catalyst. This unit was designed with one guard bed and four main reactors in each train. The axial metal profiles which were measured on spent catalysts showed the iron depositing largely in the guard bed and the nickel and vanadium deposition being spread out as one would expect if second-order kinetics were governing. The coke axial profile is the opposite of the metals, the later reactors having more than the earlier ones. These commercial results are consistent with pilot-plant studies (Figs. 14.1.19 to 14.1.21).

When feedstocks that do not contain metal contaminants are hydroprocessed, coke deposition is the normal deactivation culprit. In these cases, the combination of design operating pressure and temperature is chosen to keep the rate of surface coking low enough to achieve an acceptable catalyst life. Refiners usually want 24 months minimum, but some prefer to design for even longer cycle lengths between catalyst regenerations in distillate hydrocracking or hydrotreating units. The operating hydrogen partial pressure must be kept at its maximum to achieve the design life.

Downloaded from Digital Engineering Library @ McGraw-Hill (www.digitalengineeringlibrary.com)
Copyright © 2004 The McGraw-Hill Companies. All rights reserved.
Any use is subject to the Terms of Use as given at the website.

HYDROGEN PROCESSING

TABLE 14.1.23 Typical Product Yields and Properties—Residuum Hydrotreating

Feed	
Nominal cutpoint, °F (°C)	800 (427)
Specific gravity, 60/60°F (15.6/15.6°C)	1.0044
Viscosity, cSt at 122°F (50°C)	11,500
Sulfur, wt %	4.18
Nitrogen, wt %	0.40
Metals, wt ppm:	
Vanadium	136
Nickel	40
CCR, wt %	16.2
nC_7 insoluble, wt %	7.0
Product	
Yields, vol %	
Naphtha	3.4
Gas oil	18.4
Atm. residue	82.2
Total liquid	104.0
Properties:	
Naphtha	
Specific gravity, 60/60°F (15.6/15.6°C)	0.7200
Sulfur, wt ppm	40
Nitrogen, wt ppm	20
Gas oil:	
Specific gravity, 60/60°F (15.6/15.6°C)	0.8510
Viscosity, cSt at 122°F (50°C)	2.4
Sulfur, wt %	0.05
Nitrogen, wt %	0.05
Atm. residue:	
Specific gravity, 60/60°F (15.6/15.6°C)	0.9490
Viscosity, cSt at 122°F (50°C)	360
Sulfur, wt %	0.56
Nitrogen, wt %	0.27
CCR, wt %	8.02
1000°F+ (538°C+) conversion, wt %	43
Chemical H_2 consumption, SCFB	1130

Source: Okinawa Oil Company, Gulf RHDS Unit.

With these clean feeds, catalyst regeneration is commonly practiced so that ultimate catalyst lives of 5 years or more have been achieved. Table 14.1.26 shows the experience of the Kuwait National Petroleum Company (KNPC) in achieving long cycle lives in its Chevron Lummus Global's ISOCRACKING process unit.[10] KNPC regenerates catalyst in situ. Refiners have the option of ex situ regeneration as well.[47] The choice is based on economic considerations dealing with many factors including the time involved and whether a spare charge of catalyst is on hand. Continued advancements in catalyst development and commercialization have led to more active catalysts and longer cycle lengths between regenerations. In addition, the value of ex situ regeneration to recover and preserve more of the catalyst's initial cycle activity has shown to be of added value to many refiners.

Downloaded from Digital Engineering Library @ McGraw-Hill (www.digitalengineeringlibrary.com)
Copyright © 2004 The McGraw-Hill Companies. All rights reserved.
Any use is subject to the Terms of Use as given at the website.

HYDROGEN PROCESSING

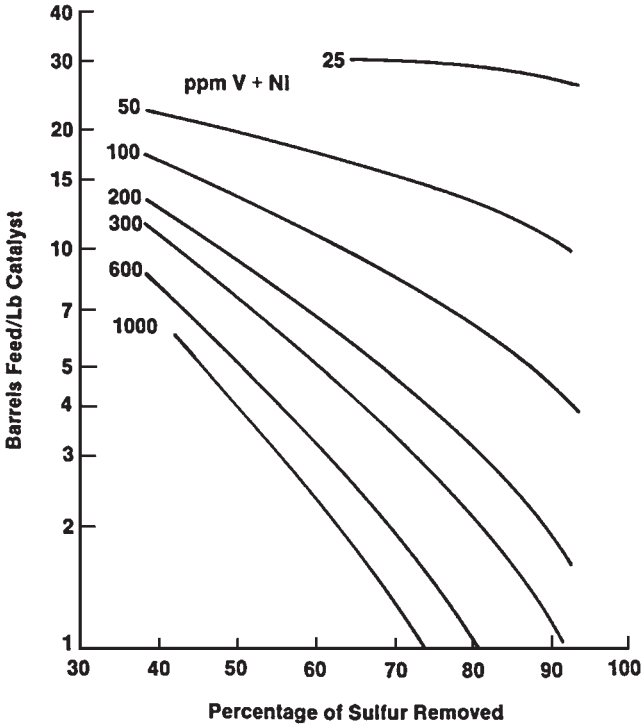

FIGURE 14.1.34 Pattern of catalyst consumption in desulfurizing residua.[59]

TABLE 14.1.24 Typical Product Yields in Residuum Hydrocracking

	LC-Fining[16]	
	Long residuum	Short residuum
Feedstock		
Density, °API	15.7	10.7
Sulfur, wt %	2.7	3.2
1050°F+ (566°C+), LV %	45	66.8
Hydrogen consumption, SCFB	985	1310
Product yields and qualities		
C_3, SCFB	350	590
C_1–C_4, wt %		
C_4–650°F (343°C) LV %	47.7	36.3
C_5–650°F (343°C)		
650–1050°F (343–566°C), LV %	37.1	36.1
Density, °API	22.4	
Sulfur, wt %	0.6	1.0
1050°F+ (566°C+), LV %	20.0	32.3
Density, °API	7.0	7.0
Sulfur, wt %	2.3	2.25

Downloaded from Digital Engineering Library @ McGraw-Hill (www.digitalengineeringlibrary.com)
Copyright © 2004 The McGraw-Hill Companies. All rights reserved.
Any use is subject to the Terms of Use as given at the website.

HYDROGEN PROCESSING

TABLE 14.1.25 Deposition of Coke and Metals—Residuum Hydrotreating

	Sample source				
	Guard chamber	Reactor number			
		1	2	3	5
Composition on basis of fresh catalyst, wt %:					
Carbon	8.6	13.4	13.4	16.9	17.4
Nickel	6.1	2.8	4.5	1.5	1.2
Vanadium	28.0	10.5	20.0	5.5	4.4
Iron	4.0	0.7	0.6	0.3	0.7
Total metals, wt %	38.1	25.1	14.0	7.3	6.3
Total metals plus coke, wt %	46.7	38.5	27.4	24.2	23.7
Relative HDS activity (fresh RF-11 = 100)	5	6	32	38	26

Source: Maruzen Oil Company,[74] Hydrocracking/HDS unit.

TABLE 14.1.26 ISOCRACKING Catalyst Regeneration Experience

Catalyst	Cycle no.*	Length of cycle, months	Isocracker stage
ICR 300†	1	14	Single
	2	12	Single
	3	8	Single
ICR 106	1	30	Single
	2	14	Single
ICR 106	1	23	Single‡
	2	25	Second
	3	26	Second
ICR 106	1	60+	First

*In situ regeneration between cycles.
†Early version of ICR 106.
‡The catalyst was regenerated before the change to two-stage operation, although it was still relatively active.
Source: Kuwait National Petroleum Company Isocracker unit.[10]

Hydrogen Consumption

As Nelson has pointed out,[60] the single largest item in the cost of desulfurizing residua is the cost of hydrogen. Only in handling high-metal residuum feeds does catalyst cost approach that of hydrogen. He has correlated the data available up to 1977 as a function of feedstock quality,[61] operating hydrogen partial pressure, product quality, and catalyst age. Nelson's basic correlation is shown as Fig. 14.1.35.

Utilities

As hydroprocessing has been applied more to heavy feedstocks and particularly to the conversion of such feedstocks, the utility balances have become more complicated. The reactor section of the plant and the product fractionation section must be considered as a whole, since the amount of steam generated in the latter can be more than enough to supply the needs of the former. Table 14.1.27 shows typical utility requirements for a two-stage Chevron Isocracker like the one depicted in Fig. 14.1.26.

Downloaded from Digital Engineering Library @ McGraw-Hill (www.digitalengineeringlibrary.com)
Copyright © 2004 The McGraw-Hill Companies. All rights reserved.
Any use is subject to the Terms of Use as given at the website.

HYDROGEN PROCESSING

Correction for High Metals Feeds

V + Ni, ppm	Corrections, %
0-100	-2
200	1
300	2.5
400	4
500	6.5
600	9
700	12
800	16
900	21
1000	28
1100	38
1200	50

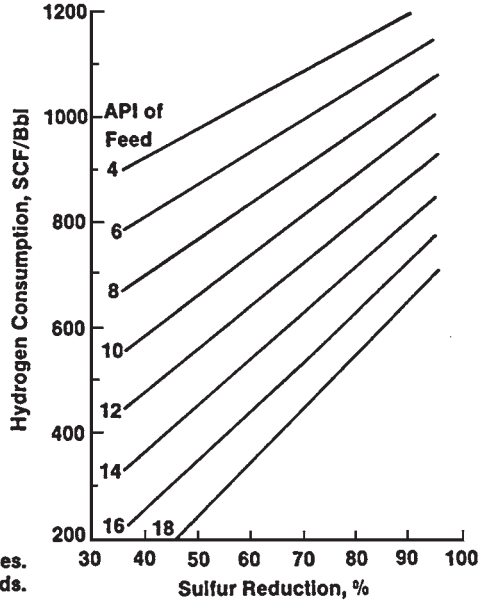

Note:

1. **Reduce by 9% for fixed-bed processes.**
2. **Apply correction for high metals feeds.**

FIGURE 14.1.35 Chemical hydrogen consumption in desulfurization of residua.[61]

Most of the cooling water shown is used to condense exhaust steam from the recycle compressor drivers. This could be eliminated in favor of air cooling at somewhat greater capital expense and power requirement. The utility balance above assumes the reactor charge pumps are driven by electric motors with power recovery turbines.

The hydrocracker produces a significant quantity of 200 lb/in^2 gage steam by recovering heat from the reactor effluent streams and the reactor charge furnace convection sections. The larger distillation furnace was assumed to have air preheat.

Summary

At the 1930 American Chemical Society symposium on "Industrial High-Pressure Reactions," the chairman of the symposium, Norman W. Krase, stated in his opening address that "oil hydrogenation promises to place the petroleum industry on a better economic basis." This promise has been fulfilled. New technological advances are continually being developed and commercialized. The modern version of distillate hydrocracking was introduced in the United States in the 1960s to convert excess fuel oil to motor gasoline and some jet fuel by using hydrogen produced with the natural gas which was in plentiful supply. FCC cycle oils were popular feedstocks at first. The process was then used to upgrade the liquids produced in delayed and fluid coking and solvent deasphalting.

While these residuum conversion schemes were being implemented, a demand for low-sulfur fuel oil developed, and fixed-bed residuum hydrotreating was commercialized. Since then, LSFO demand has dropped, and these hydrotreaters are being used as residuum mild hydrocrackers or as FCC feed pretreaters. On-stream catalyst replacement technology has been commercialized to extend the capabilities of fixed-bed residuum hydrotreaters. Numerous ebullating-bed residue hydrocrackers using LC-Fining technolo-

Downloaded from Digital Engineering Library @ McGraw-Hill (www.digitalengineeringlibrary.com)
Copyright © 2004 The McGraw-Hill Companies. All rights reserved.
Any use is subject to the Terms of Use as given at the website.

HYDROGEN PROCESSING

TABLE 14.1.27 Typical Utility Requirements

Two-stage ISOCRACKING (see Fig. 14.1.26).

	Reactor section	Distillation section
Feed rate, BPOD	39,000	
Fuel fired, BPOD-EFO*	310	640
Steam at 200 lb/in^2 gage, lb/h:		
Generated	112,000	3,000
Consumed	61,000	35,000
Net	(51,000)	32,000
Cooling water [15°F (8.3°C) ΔT], gal/min	8,000	4,000
BFW, gal/min	234	6
Condensate, gal/min (returned)	120	—
Power, kW	10,800	1,500

*Barrel of equivalent fuel oil (EFO) is equal to 6,000,000 Btu.

gy are also operating to convert high-sulfur high-metals content residuum to low-sulfur fuel oil and valuable distillate products.

The early distillate hydrocrackers were built in North America, where the demand for motor gasoline is high. Many units have now been designed and operating in overseas refineries where there is a need to make good-quality kerosene and diesel fuel. Besides this trend, hydrocracking is steadily replacing conventional extraction processes in lube oil base stock manufacture. It results in much more valuable by-products than the older solvent-based process. The use of Chevron Lummus Global's ISODEWAXING process gives refiners the opportunity to produce base oils with high viscosity indexes meeting Group II or III lube requirements. Hydroprocesses, in general, are clean processes in that feedstock sulfur and nitrogen end up as H_2S and ammonia in a water stream that can easily be purified without harming the environment. Light and middle distillate hydrotreating to produce clean fuels with low sulfur, low aromatics, and low olefins is of primary importance for refiners to meet changing fuel specifications.

This interest in hydroprocessing has caused a tremendous increase in catalyst consumption in the petroleum industry. The character of the catalysts has changed. With heavier feedstocks and more severe conditions, diffusion limits have been reached and smaller-size catalysts are now used. Also, catalysts of unique shapes have been introduced. Novel reactor systems including the use of both cocurrent and countercurrent reactors have been commercialized.

Decisions to construct new hydroprocessing facilities involve some risk in view of uncertainty in future crude oil prices and price differentials between light and heavy products. However, in many cases the need to construct a new or revamp an existing facility is driven by the need to produce clean fuels meeting more stringent specifications. Careful planning of such projects can turn environmental compliance into added value when considering the overall hydroprocessing needs within a refinery. Refiners need to optimize the operation of existing process units. They also want to take advantage of the poorer-quality, lower-priced crudes. Applying the knowledge and understanding of hydroprocessing that has been developed in the past few decades will help them achieve these goals through the efficient use of hydrogen.

Downloaded from Digital Engineering Library @ McGraw-Hill (www.digitalengineeringlibrary.com)
Copyright © 2004 The McGraw-Hill Companies. All rights reserved.
Any use is subject to the Terms of Use as given at the website.

HYDROGEN PROCESSING

ACKNOWLEDGMENTS

Acknowledgements go to ChevronTexaco Research and Technology Company and Chevron Lummus Global LLC for help with this chapter. In originally researching the literature while first writing this chapter, the significant contributions that Gulf Research and Development Corporation (GR &DC) engineers and scientists made in this field was highly apparent. GR & DC no longer exists since it was merged with Chevron Corporation in 1985. It is impossible to list all of the individual contributors, but it is important to acknowledge the contributions of so many throughout the refining and related industries who have endevored in the field of hydroprocessing technologies.

REFERENCES

1. F. H. Adams, J. G. Gatsis, and J. G. Sikonia, *Proc. First Int. Conf. Future of Heavy Crude Oils and Tar Sands,* McGraw-Hill, 1981.
2. D. Adlington and E. Thompson, Third European Symposium on Chemical Reaction Engineering, Amsterdam, 1964.
3. M. F. Ali, M. V. Hasan, A. M. Bukhari, and M. Saleem, *Hydrocarbon Processing,* 83–86, February 1985.
4. W. F. Arey, N. E. Blackwell, and A. D. Reichle, Seventh World Petroleum Congress, Mexico City, 1967.
5. E. C. Attane, D. E. Mears, and B. J. Young, API Meeting, San Francisco, 1971.
6. R. Bearden and C. L. Alderidge, *Energy Progr.* **1**(1–4): 44, 1981.
7. H. Beuther and B. K. Schmid, Sixth World Petroleum Conference, Frankfurt, III-20, June 1963.
8. M. M. Boduszynski and K. H. Altgelt, *Composition and Analysis of Heavy Petroleum Fractions,* Marcel Dekker, New York, 1994.
9. W. A. Bollinger, S. P. Long, and T. R. Metzger, *Chem. Eng. Progr.,* 51–57, May 1984.
10. A. G. Bridge, G. D. Gould, and J. F. Berkman, *Oil and Gas Journal,* 85–98, Jan. 19, 1981.
11. A. G. Bridge and D. C. Green, ACS Meeting, Washington, September 1979.
12. A. G. Bridge, J. Jaffe, B. E. Powell, and R. F. Sullivan, API Meeting, Los Angeles, May 1983.
13. A. G. Bridge, E. M. Reed, and J. W. Scott, API Meeting, Chicago, May 1975.
14. A. G. Bridge, E. M. Reed, P. W. Tamm, and D. R. Cash, AIChE Meeting, New Orleans, La., March 1973.
15. J. B. Butt, *AIChE Journal,* **22:** 1–26, 1976.
16. J. A. Celestinos, R. G. Zermeno, R. P. Driesen, and E. D. Wysocki, *Oil and Gas Journal,* 127–134, Dec. 1, 1975.
17. H. C. Chen and A. G. Bridge, Modern Engineering and Technology Seminar, Taiwan, July 3–21, 1978.
18. N. Choudhary and D. N. Saraf, *Ind. Eng. Chem., Prod. Res. Dev.,* **14:** 2, 1975.
19. R. A. Corbett, *Oil and Gas Journal,* 73–119, Oct. 14, 1985.
20. H. G. Cornell and F. J. Heinzelmann, *Hydrocarbon Processing,* 85–90, Aug. 1980.
21. F. M. Dautzenberg, S. E. George, C. Owerkerk, and S. T. Sie, Advances in Catalytic Chemistry II, Salt Lake City, May 1982.
22. F. M. Dautzenberg and J. C. DeDeken, *Catal. Rev.-Sci Eng.,* **26** (3,4): 421–444, 1984.
23. S. P. Donnelly and J. R. Green, Japan Petroleum Institute Meeting, Tokyo, Oct. 1980.
24. R. M. Eccles, A. M. Gray, and W. B. Livingston, *Oil and Gas Journal,* **80:** 121, 1982.

Downloaded from Digital Engineering Library @ McGraw-Hill (www.digitalengineeringlibrary.com)
Copyright © 2004 The McGraw-Hill Companies. All rights reserved.
Any use is subject to the Terms of Use as given at the website.

HYDROGEN PROCESSING

25. W. E. Erwin and J. G. Kerr, *Bulletin 275,* Welding Research Council, New York, Feb. 1982.
26. T. R. Farrell and J. A. Zakarian, *Oil and Gas Journal,* May 19, 1986.
27. R. A. Flinn, H. Beuther, and B. K. Schmid, *Petrol. Refin,* **40**(4): 139–143, April 1961.
28. M. J. Fuchs, B. E. Powell, R. S. Tolberg, and Y. Saito, API Meeting, New Orleans, May 1984.
29. J. H. Gary and G. E. Handwerk, *Petroleum Refining,* Marcel Dekker, New York, 1984.
30. B. C. Gates, J. R. Katzer, and G. C. A. Shuit, *Chemistry of Catalytic Process,* McGraw Hill, New York, 1979.
31. H. G. Geerlings and D. H. Van Nieuwenhuizen, Royal Institution of Engineers in the Netherlands, May 19, 1972.
32. V. A. Gembicki, R. E. Andermann, and D. G. Tajbl, *Oil and Gas Journal,* 116–127, Feb. 21, 1983.
33. K. F. Gerdes, B. E. Stangeland, G. T. S. Chen, and R. J. Gumermann, AIChE Meeting, Chicago, November 1976.
34. G. D. Gould, D. A. Bea, J. F. Mayer, and D. R. Sageman, NPRA Meeting, San Francisco, March 1977.
35. D. C. Green and D. H. Broderick., *Chem. Eng. Prog.,* **33,** December 1981.
36. A. J. Gully and W. P. Ballard, *J. Adv. Petr. Chem. and Ref. III,* 1961.
37. R. T. Haslam and R. P. Russell, *Ind. Eng. Chem.,* **22,** 1930.
38. A. L. Hensley and L. M. Quick, AIChE Meeting, Philadelphia, June 1980.
39. R. J. Hengstebeck, *Hydrocarbon Processing,* 100–102, August 1970.
40. H. P. Hofmann, *Catal. Rev.-Sci. Eng.,* **17**(1): 71–117, 1978.
41. W. A. Horne and J. McAfee, *J. Adv. Petr. Chem & Ref.,* III: 192–277, 1960.
42. R. L. Howell, C. Hung, K. R. Gibson, and H. C. Chen, *Oil and Gas Journal,* 121–128, July 29, 1985.
43. C. Hung, R. L. Howell, and D. R. Johnson, *Chem. Eng. Progr.,* 57–61, March 1986.
44. S. B. Jaffe, *Ind. Eng. Chem. Proc. Des. Develop,* **13:** 1, 1974.
45. S. B. Jaffe, *Ind. Eng. Chem. Proc. Des. Develop,* **15:** 3, 1976.
46. J. Kubo, Y. Oguchi, and H. Nomura, *Bull. JPI,* **17:** 100–107, 1975.
47. R. C. Kunzelman, R. E. Ellingham, and R. M. Van Rappard, NPRA Meeting, New Orleans, La., 1980.
48. J. L. Lafferty, D. A. Young, W. W. Burleigh, and C. H. Peters, API Meeting, Chicago, 1977.
49. G. E. Langlois and R. F. Sullivan, *Adv. Chem. Ser.,* **97:** 38, 1970.
50. D. Luss and N. R. Amundson, *AIChE J.,* **13**(4): 759, 1967.
51. D. C. Matarresse, *Oil and Gas Journal,* **81**(24): 111–114, 1983.
52. V. T. Mavity, J. W. Ward, and K. E. Whitehead, API Meeting, Toronto, May 1978.
53. M. A. Menzies, T. F. Scott, and J. A. Denis, *Proc. Intersoc. Energy Conv. Eng. Conf.,* **15**(1): 26, 1980.
54. J. W. Miller, M. Skripek, T. L. Carlson, and D. Ackelson, AIChE Meeting, New Orleans, La., Nov. 8, 1981.
55. S. J. Miller, *Microporous Materials,* **2:** 439–449, 1994.
56. A. A. Montagna, Y. T. Shah, and J. A. Paraskos, *Ind. Eng. Chem. Process Des. Devel.* **16**(1): 152, 1977.
57. A. A. Montagna and Y. T. Shah, *Ind. Eng. Chem. Process Des. Devel.,* **14**(4): 479, 1975.
58. W. L. Nelson, *Oil and Gas Journal,* 80–81, Nov. 18, 1974.
59. W. L. Nelson, *Oil and Gas Journal,* 72–74, Nov. 15, 1976.
60. W. L. Nelson, *Oil and Gas Journal,* 66–67, Feb. 21, 1977.

Downloaded from Digital Engineering Library @ McGraw-Hill (www.digitalengineeringlibrary.com)
Copyright © 2004 The McGraw-Hill Companies. All rights reserved.
Any use is subject to the Terms of Use as given at the website.

HYDROGEN PROCESSING

61. W. L. Nelson, *Oil and Gas Journal,* 126–128, Feb. 28, 1977.
62. E. J. Newson, *Ind. Eng. Chem. Proc. Des. Dev.,* **14:** 27, 1975.
63. L. D. Nicholson, *Oil and Gas Journal,* 59–63, Mar. 28, 1977.
64. E. J. Nitta, T. Takatsuka, S. Kodama, and T. Yokoyama, AIChE Meeting, Houston, April 1979.
65. W. J. Novak, Japan Petroleum Institute Meeting, Tokyo, October 1980.
66. S. J. Nutting and P. E. Davis, The Institute of Petroleum, London, April 1995.
67. T. Ohtsuka, *Catal. Rev.-Sci. Eng.,* **16**(2): 291–325, 1977.
68. R. K. Olson and M. E. Reno, NPRA Meeting, San Francisco, March 1983.
69. D. J. O'Rear, H. A. Frumkin, and R. F. Sullivan, API Meeting, New York, 1982.
70. H. Ozaki, Y. Satomi, and T. Hisamitsu, 9th World Petroleum Congress, Tokyo, 1975.
71. R. L. Piehl, *Materials Performance,* 15–20, January 1976.
72. F. W. B. Porter and E. C. Housam, *Inst. Chem. Engrs. Yorkshire Meeting,* 9–18, June 1963.
73. K. Rajagopalan and D. Luss, *Ind. Eng. Chem. Proc. Des. Devel.,* **18**(3): 459, 1979.
74. R. L. Richardson, F. C. Riddick, and M. Ishikawa, *Oil and Gas Journal,* 80–94, May 28, 1979.
75. J. F. Richardson and W. N. Zaki, *Trans. I.Ch.E (London),* **32:** 35, 1954.
76. J. W. Rosenthal, S. Beret, and D. C. Green, API Meeting, Los Angeles, May 10, 1983.
77. W. J. Rossi, J. F. Mayer, and B. E. Powell, *Hydrocarbon Processing,* May 1978.
78. K. Saito, S. Shinuzym, Y. Fukui, and H. Hashimoto, AIChE Meeting, San Francisco, November 1984.
79. C. N. Satterfield, *Mass Transfer in Heterogenous Catalysis,* MIT Press, Cambridge, Mass., 1970.
80. S. C. Schuman and H. Shalit, *Catal. Rev.,* **4**(2): 245–318, 1970.
81. J. W. Scott and N. J. Paterson, Seventh World Petroleum Congress, IV-7, Mexico City, June 1967.
82. J. W. Scott and A. G. Bridge, *Adv. Chem. Ser.,* **103,** ACS, 1971.
83. J. W. Scott, J. F. Mayer, and J. A. Meyer, Modern Engineering and Technology Seminar, Taiwan, July 1980.
84. A. I. Snow and M. P. Grosboll, *Oil and Gas Journal,* 61–65, May 23, 1977.
85. J. G. Speight, *The Desulfurization of Heavy Oils and Residua,* Marcel Dekker, New York, 1981.
86. J. C. Spry and W. H. Sawyer, AIChE Meeting, Los Angeles, 1975.
87. B. E. Stangeland and J. R. Kittrell, *Ind. Eng. Chem. Process Des. Develop.,* **11:** 15–20, 1972.
88. B. E. Stangeland, *Ind. Eng. Chem. Process Des. Develop.,* **13:** 71–75, 1974.
89. R. F. Sullivan, C. J. Egan, G. E. Langlois, and R. P. Sieg, *J. Am. Chem. Soc.,* **83:** 1156, 1961.
90. R. F. Sullivan and J. A. Meyer, ACS Meeting, Philadelphia, April 1975.
91. R. F. Sullivan, *Advances in Catal. Chem. I, Meeting,* F. V. Hanson, Chairman, University of Utah, Snowbird, October 1979.
92. E. Talmor, *AIChE Journal,* **23:** 868–878, 1977.
93. P. W. Tamm, H. F. Harnsberger, and A. G. Bridge, *Ind. Eng. Chem. Proc. Des. Dev.,* **20:** 262, 1981.
94. E. W. Thiele, *Ind. Eng. Chem.,* **31:** 916, 1939.
95. C. L. Thomas and E. J. McNelis, *Proc. 7th World Petroleum Congress 1B,* 161, 1967.
96. J. Van Klinken and R. H. Van Dongen, *Chem. Eng. Sci.,* **35:** 59–66, 1980.
97. D. Van Zooner, and C. T. Douwes, *J. Inst. Petrol,* **49**(480): 383–391, 1963.
98. L. Walliser, *Oil and Gas Journal,* **78:** 12, Mar. 24, 1980.
99. J. W. Ward, *Hydrocarbon Processing,* 101–106, September 1975.

Downloaded from Digital Engineering Library @ McGraw-Hill (www.digitalengineeringlibrary.com)
Copyright © 2004 The McGraw-Hill Companies. All rights reserved.
Any use is subject to the Terms of Use as given at the website.

HYDROGEN PROCESSING

100. A. M. Watson, *Hydrocarbon Processing,* 91–95, March 1983.

101. P. B. Weisz, *Chem. Eng. Prog. Symp. Ser. No. 25:* 105–158, 1954.

102. A. Wheeler, Catalysis, vol. 2, Paul H. Emmett (ed.), Reinhold Publishing Corp., 1955, pp. 105–158.

103. M. W. Wilson, K. L. Eiden, T. A. Mueller, S. D. Case, and G. W. Kraft, NPRA Meeting, Houston, November 1994.

104. S. M. Yui and E. C. Sanford, API Meeting, Kansas City, May 1985.

105. G. L. Hamilton, M. C. Baldassari, and D. Dave, AIChE Meeting, Session 16a07, Paper 126e, Houston, March 1997.

Downloaded from Digital Engineering Library @ McGraw-Hill (www.digitalengineeringlibrary.com)
Copyright © 2004 The McGraw-Hill Companies. All rights reserved.
Any use is subject to the Terms of Use as given at the website.

Source: HANDBOOK OF PETROLEUM REFINING PROCESSES

P · A · R · T · 15

GAS-TO-LIQUIDS TECHNOLOGIES

Downloaded from Digital Engineering Library @ McGraw-Hill (www.digitalengineeringlibrary.com)
Copyright © 2004 The McGraw-Hill Companies. All rights reserved.
Any use is subject to the Terms of Use as given at the website.

Downloaded from Digital Engineering Library @ McGraw-Hill (www.digitalengineeringlibrary.com)
Copyright © 2004 The McGraw-Hill Companies. All rights reserved.
Any use is subject to the Terms of Use as given at the website.

Source: HANDBOOK OF PETROLEUM REFINING PROCESSES

CHAPTER 15.1
OLEFIN PRODUCTION FROM METHANOL

Peter R. Pujadó and James M. Andersen
UOP LLC
Des Plaines, Illinois

The conversion of natural gas into syngas is the first step in utilizing natural gas for methanol and for the conversion of gas-to-liquids hydrocarbon products. Methanol as a base chemical offers limited opportunities for natural gas utilization unless linked to other derivative markets. Gas-to-liquids (GTL) technology using Fischer-Tropsch type of catalysts offers large market opportunities for natural gas utilization but is challenged by the economics of high capital costs with relatively low transportation fuel product values.

Syngas and methanol production technologies are achieving greater economies of scale. World-scale methanol production facilities have doubled in size compared to just a few years ago, and when combined with remote natural gas prices, these facilities offer substantially lower costs of production than those in existing plants. However, although methanol can be economically shipped from remote gas areas, the expected growth in demand for methanol for conventional uses does not support the addition of many new plants.

The conversion of methanol to fuel components was accomplished commercially in the Mobil MTG (methanol-to-gasoline) process[1–4] at a plant located near New Plymouth in New Zealand, but that plant has since been shut down on account of the relatively poor economics of gasoline production. However, Mobil did demonstrate that over a ZSM-5 (MFI) type zeolitic catalyst, methanol could be converted to a largely aromatic product, up to durene, but also with a significant proportion of olefins, principally propylene. Lurgi has recently developed a modified version of this process that minimizes the production of the gasoline fraction and maximizes production of propylene at about 70 percent; this process is known as MTP for methanol-to-propylene.[5]

Methanol can also be converted to ethylene and propylene via the UOP/Hydro MTO process, thus opening new opportunities for methanol utilization. Ethylene and propylene can then be used to satisfy the growing market demand for polyolefins or can be used in the production of other olefin derivatives. Remote gas strategies for MTO generally consider either the shipping of methanol from remote locations to countries with strong olefin demand or shipping of polymer pellets from fully integrated gas-to-polyolefin (GTP) facilities in remote locations.

Downloaded from Digital Engineering Library @ McGraw-Hill (www.digitalengineeringlibrary.com)
Copyright © 2004 The McGraw-Hill Companies. All rights reserved.
Any use is subject to the Terms of Use as given at the website.

OLEFIN PRODUCTION FROM METHANOL

INTRODUCTION

Figure 15.1.1 illustrates various alternatives for the utilization of natural gas in the production of either liquid fuels or petrochemical derivatives. There is at present renewed interest and considerable activity in the planning and construction of large-scale GTL facilities. GTL technology is attractive because it offers great potential for the valorization of stranded gas by taking advantage of the large markets for fuel products. The implementation of GTL and other large-scale gas conversion projects is challenging because investments are high, technologies are often not well proven at the actual scale, there is competition with crude-oil-based products, and plant location is often in remote areas. One way to enhance the economics of GTL projects is to produce products with higher added value. This can include the recovery of normal paraffins for linear alkyl benzene (LAB) production, specialty lube oils, methanol, olefins, and polyolefins. The markets for some of these products can limit the opportunities for production in GTL facilities. The olefin and polyolefin markets, however, are exceptionally large, and these products offer very high added value.

Both GTL and GTP facilities incorporate sizable front-end syngas units for the processing of natural gas, as illustrated in Fig. 15.1.1. These units are the major contributors to the relatively high investments required for these complexes. It follows that the integration of these facilities could offer substantial synergistic savings. Potential savings for integrated GTL/GTP complexes may derive from

- Shared syngas plant
- Shared utility systems with by-products utilization
- Shared wastewater treatment facilities
- Shared administration, laboratory, and maintenance facilities
- Minimal intermediate-product storage facilities needed

There are other advantages for integrated facilities, such as advantages of back-integration for polyolefin production:

- Lower cash costs of production
- Elimination of costs for intermediate-products shipping and handling
- Consistency and better control over feedstock quality

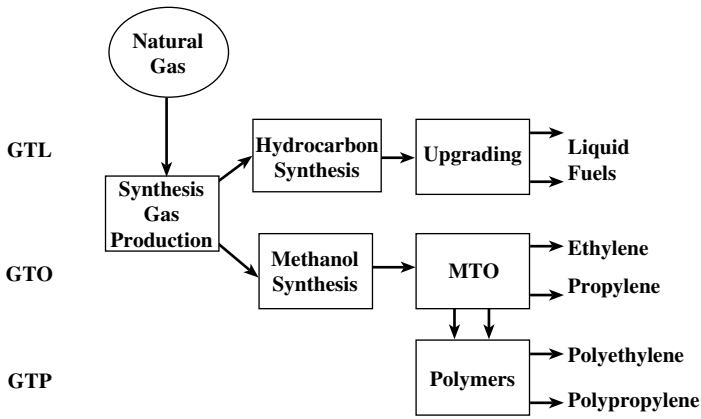

FIGURE 15.1.1 Conversion steps for natural gas to liquids and polyolefins.

Downloaded from Digital Engineering Library @ McGraw-Hill (www.digitalengineeringlibrary.com)
Copyright © 2004 The McGraw-Hill Companies. All rights reserved.
Any use is subject to the Terms of Use as given at the website.

OLEFIN PRODUCTION FROM METHANOL

When one is considering an integrated facility to convert natural gas to polyolefins (GTP), there are three main process technologies involved. These technologies must fit together at world-scale capacities for an ideal integration. Each of these technologies is discussed further in the next paragraphs.

Syngas/methanol process technology is available from several well-known licensors. Until recently, world-scale capacity for methanol production was considered 2500 to 3000 metric tons per day (MT/D). Now there are a number of projects underway with capacities of 5000 MT/D, and licensors of syngas/methanol technologies are discussing capacities as high as 10,000 MT/D. Most of the new capacity that has recently come, or will soon be coming, on-stream reflects a growing trend in which methanol production has been shifting from heavily industrialized countries to locations with access to lower-priced natural gas.

The combination of large-scale production facilities with low-priced natural gas feedstock substantially reduces the fundamental costs of methanol production, as shown in Fig. 15.1.2.

Many smaller plants exist today in industrialized locations. The cash cost of production for these plants is typically more than $100/MT of methanol, due primarily to the cost of natural gas. If capital charges are added to provide, say, a 20 percent return on capital (ROC), then the delivered price of methanol is almost $180/MT. Large-scale plants in remote locations experience a considerable advantage due to low cash costs and economies of scale, even after accounting for the costs of shipping to distant markets. For these remote units the cash costs of production can be less than $50/MT. These units can deliver methanol at about $110/MT, even after adding capital charges and costs for shipping. New mega-scale projects enjoy an even greater advantage and can achieve attractive project economics with methanol delivered at prices less than $90/MT. This enables new applications for methanol such as fuel cells or conversion to olefins and offers large market growth potential.

Polyolefins are widely produced using technologies available from several licensors and may include flexibility to produce several grades of homopolymer and copolymer products. World-scale capacity for polyethylene processes is generally considered in the range of 300 kilometric tons per annum to 350 (kMTA). World-scale capacity for polypropylene processes is generally considered in the range of 250 to 300 kMTA.

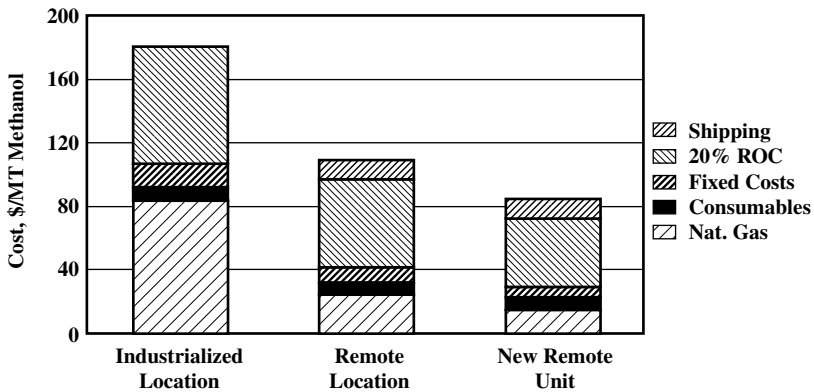

- **"Industrialized Location" is based on 1500 MT/D capacity with $2.50/million Btu gas**
- **"Remote Location" is based on 3000 MT/D capacity with $0.75/million Btu gas**
- **"New remote Unit" is based on 6000 MT/D capacity with $0.50/million Btu gas**

FIGURE 15.1.2 Examples of methanol production costs.

Downloaded from Digital Engineering Library @ McGraw-Hill (www.digitalengineeringlibrary.com)
Copyright © 2004 The McGraw-Hill Companies. All rights reserved.
Any use is subject to the Terms of Use as given at the website.

OLEFIN PRODUCTION FROM METHANOL

MTO TECHNOLOGY

The remaining technology piece of the integrated GTP plant is an MTO unit capable of converting methanol to light olefins: ethylene and propylene. The UOP/Hydro MTO process provides the key link between natural gas and polyolefin production. It provides more profitable means to valorize remote gas and offers new opportunities for natural gas utilization. The MTO process is an innovative route for the production of olefins from natural gas. It offers yield flexibility that can deliver propylene as well as ethylene and satisfy the propylene demand that cannot be met by conventional ethylene plants alone.[2]

The conversion of methanol to olefins requires a selective catalyst that operates at moderate to high temperatures. The reaction is exothermic so heat can be recovered from the reaction. Methanol first goes through a dimethylether (DME) intermediate, and the reaction proceeds with further dehydration to yield ethylene and propylene. A limited amount of butenes and higher olefins is produced as well. Depending on the design and operation of the MTO unit, the overall yields of ethylene plus propylene can be almost 80 percent, based on the carbon content of the methanol feed.

Carbon or coke accumulates on the catalyst and requires removal to maintain catalyst activity. The coke is removed by combustion with air in a catalyst regenerator system. A fluidized-bed reactor and regenerator system is ideally suited for the MTO process. The reactor operates in the vapor phase at temperatures between 350 and 550°C and pressures between 1 and 3 bar gage. A slipstream of catalyst is circulated to the fluidized-bed regenerator to maintain high activity. The UOP/Hydro MTO process can be operated on "crude" or undistilled methanol as well as on pure methanol. The choice of feedstock quality generally depends on project-specific situations because there can be advantages in either case. Figure 15.1.3 illustrates a simple flow diagram for the UOP/Hydro MTO process. After the oxygenate recovery section, the effluent is further processed in the fractionation and purification section to separate the key products from the by-product components. Ethylene and propylene are produced as polymer-grade products and sent to storage.

The highly selective MTO-100 catalyst is based on SAPO-34, a template-based, silicoaluminophosphate molecular sieve with a chabazite structure and a unique pore size of about 3.8 Å (Fig. 15.1.4). The pore size controls the size of the olefins that emerge from the catalyst pores. Larger olefins diffuse out at a slower rate. Smaller olefins predominate in the reactor product. If, on the contrary, the reaction were conducted over an MFI zeolite with

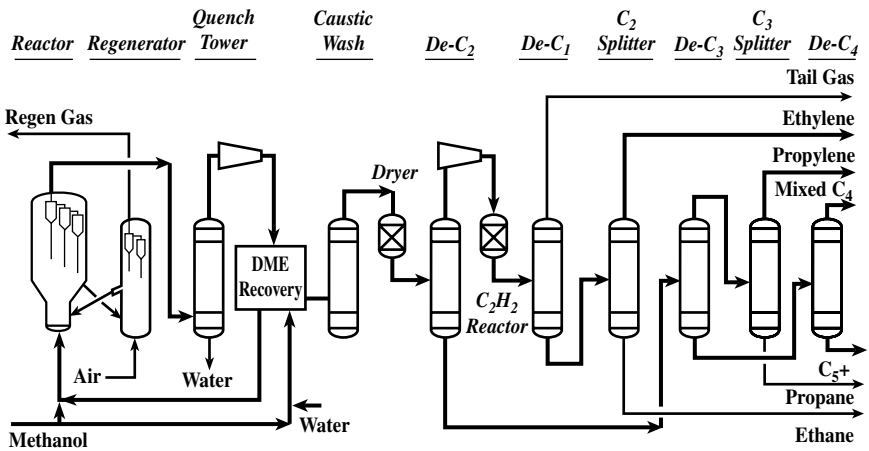

FIGURE 15.1.3 MTO process flow scheme.

Downloaded from Digital Engineering Library @ McGraw-Hill (www.digitalengineeringlibrary.com)
Copyright © 2004 The McGraw-Hill Companies. All rights reserved.
Any use is subject to the Terms of Use as given at the website.

OLEFIN PRODUCTION FROM METHANOL

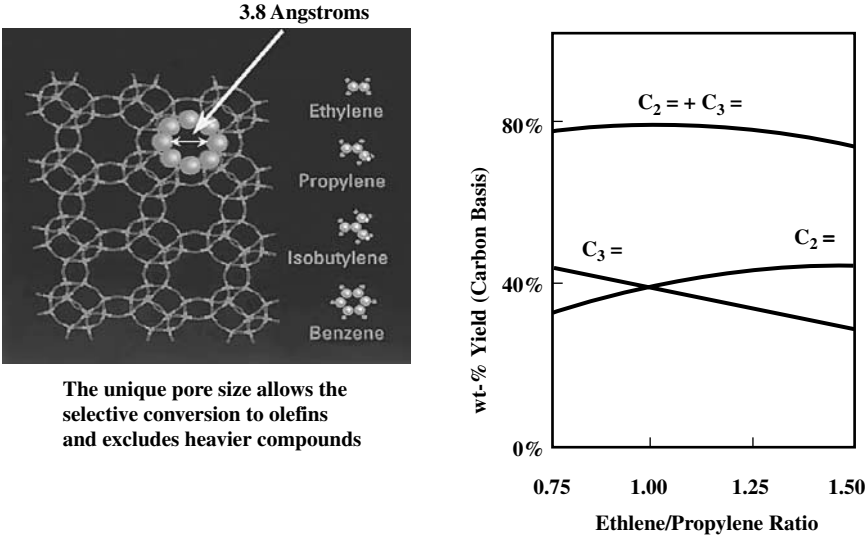

FIGURE 15.1.4 SAPO-34 structure and MTO light olefin yields.

a pore size of about 5.1 to 5.6 Å, the product would comprise much larger molecules, all the way to aromatics.

In a typical operation, up to 80 percent of the methanol feed (on a percent carbon basis) is converted to ethylene and propylene, with approximately 10 percent going to butenes.

The UOP/Hydro MTO process offers a wide range of flexibility for altering the relative amounts of ethylene and propylene products by adjusting the operating severity in the reactor. The MTO process can be designed for an ethylene-to-propylene product ratio between 0.75 and 1.5. The overall yield of light olefins (ethylene plus propylene) changes slightly over this range with the highest yields achieved with about equal amounts of ethylene and propylene, roughly in the 0.8 to 1.25 range. This envelope provides the lowest

TABLE 15.1.1 MTO Mass Balance

600,000 MTA light olefins (ethylene + propylene)

	Feedstocks, MT/D	Products, MT/D
Methanol*	5204	
Ethylene		882
Propylene		882
Mixed butanes		272
C_5+ hydrocarbons		100
Fuel gas		88
Other (water, CO_x, coke, etc.)		2980
Total	5204	5204

*5204 MT/D of methanol requires about 155 million SCF/day (4.2 million Nm^3/day) of natural gas, assuming MTO by-products are used as fuel.

Downloaded from Digital Engineering Library @ McGraw-Hill (www.digitalengineeringlibrary.com)
Copyright © 2004 The McGraw-Hill Companies. All rights reserved.
Any use is subject to the Terms of Use as given at the website.

OLEFIN PRODUCTION FROM METHANOL

methanol requirements, but the ratio can be adjusted to reflect the relative market demand and pricing for ethylene and propylene.

An example material balance is shown in Table 15.1.1 for the production of 600,000 MTA of light olefins with equal amounts of ethylene and propylene. Approximately 3 tons of methanol is required per ton of light olefins. This represents a carbon-based yield of almost 80 percent.

Because of the high olefin yields and low light-ends make, the MTO process does not require an ethylene refrigeration system. Although it is not yet commercialized, additional projected cost savings have been achieved by optimizing the reactor design and performing value engineering and pinch analysis. Several design packages have been prepared to determine the design requirements and costs for MTO projects. These studies have included design and cost requirements for off-sites and utility systems associated with stand-alone MTO as well as integrated GTP projects.

ECONOMIC BASIS

To arrive at a meaningful economic comparison, we have made a number of pricing assumptions. Investment costs were adjusted to reflect a remote location. Allowances for the costs for off-sites and utilities were assumed to be equivalent to 35 percent of the inside-battery-limits (ISBL) estimated erected costs. This is expected to be a reasonable approximation for integrated facilities.

Product prices were estimated to roughly correspond to a crude oil price of \$18/bbl (1 bbl $\sim$ 0.159 m^3). The natural gas price was assumed at \$0.50/million Btu (1 million Btu $\sim$ 1.055 GJ), reflecting a price for remote gas utilization. GTL liquid products were assumed to have an aggregate value equivalent to \$5/bbl above the crude oil price, and gas products were valued at the equivalent to the local fuel value.

Polyolefin yields were assumed at 98 wt % of the monoolefin feed rate. Polyolefin product prices were based on averages of historical spot and contract prices for western Europe roughly corresponding to crude oil at \$18/bbl.

Shipping costs were assumed to estimate net-back revenues after marine transportation from a remote location to industrialized markets such as western Europe or the United States. These costs can vary significantly depending on project and market locations as well as fuel costs. Handling fees and import duties can also impact the net-back revenues.

Fixed costs of production were based on an allowance of 5 percent of the inside-battery-limits estimated erected cost (ISBL EEC) to cover the costs of labor and supervision, overhead, maintenance, taxes and insurance, and interest on working capital. Please refer to Table 15.1.2 for details.

INVESTMENT ESTIMATES

Investment costs were estimated based on scaling the estimated erected costs for the process units. These costs were determined by comparing cost information shown in various papers and publications as well as UOP in-house information. The basis and assumptions used in developing these costs are further explained in the paragraphs that follow.

The estimated costs for the options considered in this chapter are compared in Fig. 15.1.5. The investment costs for GTL and GTL integrated with methanol production are similar at about \$1.2 billion. GTP also requires a similar investment. The addition/integration of olefin and polyolefin production facilities increases the investment cost to about \$2.0 billion.

Downloaded from Digital Engineering Library @ McGraw-Hill (www.digitalengineeringlibrary.com)
Copyright © 2004 The McGraw-Hill Companies. All rights reserved.
Any use is subject to the Terms of Use as given at the website.

OLEFIN PRODUCTION FROM METHANOL

TABLE 15.1.2 GTL/GTP Economic Basis

Item	Cost
ISBL erected cost	Remote location basis
Off-sites and utilities	35% of ISBL assumed
Other costs*	Included
On-stream factor	340 days/yr
Project life	20 yr (17 operating)
Crude oil (corresponding)	$18/bbl
Natural gas feed	$0.50/million Btu
GTL products	$23/bbl
Polyethylene	$800/MT
Polypropylene	$705/MT
Methanol	$120 and $85/MT
Shipping	$12/MT liquids
	$40/MT polyolefins
Fixed operating costs	5% of ISBL (erected)

*Other costs include catalysts, license fees, and allowances for other miscellaneous owner's costs.

GTL Investment. A GTL complex for the production of 50,000 BPSD requires the conversion of about 450 million SCF/day of natural gas and has an estimated capital cost of about $1.25 billion. This cost assumes an all-inclusive plant cost in a remote location of $25,000/BPSD. The syngas facilities are assumed to account for about 60 percent of the ISBL costs for a GTL complex.[3]

GTL/Methanol Investment. The methanol synthesis and purification sections account for about 28% of the ISBL cost of a conventional methanol plant.[4] A world-scale methanol plant has a capacity of about 5000 MT/D (~1.7 million MTA). By scaling up the costs of the methanol synthesis and purification facilities to the world-scale capacity, it is estimated that the capital costs of these sections would be approximately $80 million. Integrating these facilities with the same syngas facilities used in the

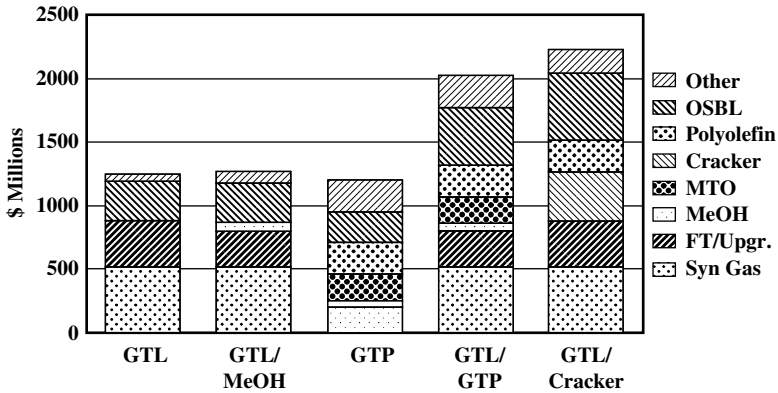

FIGURE 15.1.5 Capital investment comparison.

Downloaded from Digital Engineering Library @ McGraw-Hill (www.digitalengineeringlibrary.com)
Copyright © 2004 The McGraw-Hill Companies. All rights reserved.
Any use is subject to the Terms of Use as given at the website.

OLEFIN PRODUCTION FROM METHANOL

50,000-BPSD GTL case described above would require about 38 percent of the syngas for methanol production. Such a complex would produce 5300 MT/D of high-purity methanol plus 31,000 BPSD of GTL liquid products. The size and cost of the Fischer-Tropsch (FT) synthesis and product upgrading facilities would be reduced for the lower GTL capacity. After adding the costs for outside-battery-limits (OSBL) allowance, catalysts, license fees, and other costs, the overall plant cost for the GTL/methanol facility would be only slightly higher than those for the GTL facility.

GTP Investment. The size of a world-scale GTP complex is mainly set by the capacity of the methanol and polyolefin units. World-scale polyolefin units have capacities of about 300,000 MTA. If equal amounts of polyethylene and polypropylene were desired, the MTO unit would require about 1.8 million MTA of methanol to support 600,000 MTA of polyolefin production. The methanol purification section can be greatly simplified for an integrated GTP complex because crude methanol can be used for feedstock to the MTO unit. This results in significant savings in the methanol plant, and the amount of intermediate-product storage is minimized for an integrated facility. The estimated cost for such a GTP complex is $1.21 billion. This includes the costs for OSBL allowance, catalysts, license fees, and other costs and is based on a remote location with an assumed location factor of 15 percent above the cost for a U.S. Gulf Coast location.

GTL/GTP Investment. The addition of an MTO unit and polyolefin units allows the methanol to be converted to olefins and then polyolefins. The conversion to polyolefins is necessary because it would be very costly to ship olefins from remote locations. Polyolefins are economically shipped over long distances. The estimated cost for the integrated GTL/GTP facility is about $2 billion. This includes the costs for OSBL allowance, catalysts, license fees, and other costs and is based on a remote location with an assumed location factor of 15 percent above the cost for a U.S. Gulf Coast location.

GTL/Cracker/Polyolefin Investment. The most common route to polyethylene and polypropylene production today is through steam cracking of naphtha. The GTL liquid products include naphtha boiling-range product. This naphtha is attractive for steam cracking applications because of its high concentration of normal paraffin components. This offers high ethylene yields for naphtha cracking. The naphtha can be shipped from remote sites to industrialized locations with naphtha crackers, and this is the most commonly envisioned outlet for the GTL naphtha product. Since this chapter discusses the potential advantages of integrating polyolefin production with GTL, it is appropriate to include the integration through conventional cracking. The naphtha portion of GTL products can vary considerably depending on the catalyst and operating conditions in the Fischer-Tropsch unit. For the purposes of this chapter it was assumed the naphtha cut accounts for 28 vol % of the total FT liquids. This would provide 14,000 BPSD of naphtha, but this amount by itself is too small to support a world-scale naphtha cracker. The resulting economics would be poor for such a project, so a larger cut of the FT liquids would be necessary.

We assumed that 56 percent of the FT liquids would be used as cracker feedstock. We estimate that this 28,000 BPD of feedstock, rich in normal paraffins, could support the production of 442,000 MTA of polyethylene and 166,600 MTA of polypropylene. This ethylene yield is significantly higher than cracker yields based on conventional feedstocks. The estimated erected cost of the ISBL facilities for such a cracker is $380 million, and the corresponding cost for the polyolefin ISBL facilities is $360 million. The total investment

Downloaded from Digital Engineering Library @ McGraw-Hill (www.digitalengineeringlibrary.com)
Copyright © 2004 The McGraw-Hill Companies. All rights reserved.
Any use is subject to the Terms of Use as given at the website.

OLEFIN PRODUCTION FROM METHANOL

for this complex is estimated at slightly above $2.2 billion. This includes the costs for OSBL allowance, catalysts, license fees, and other costs and is based on a remote location with an assumed location factor of 15 percent above the cost for a U.S. Gulf Coast location.

ECONOMIC COMPARISONS

The integration of methanol production with GTL offers enhanced economics provided the methanol sales price is at around $120/MT or more. However, methanol consumption through conventional applications (i.e., formaldehyde, MTBE, chloromethanes, acetic acid, etc.) offers limited opportunities for remote gas utilization. Current demand for methanol is around 30 million MTA, and it is forecasted to grow to 37 million MTA in 10 years. This additional methanol demand would support the installation of only two or three world-scale methanol plants and consume about 665 million SCF/day (17.8 million Nm^3/day) of natural gas. New methanol projects are also likely to result in closures of some existing plants with higher production costs, but this provides limited opportunities and does not support higher market prices. Many of the alternative uses for methanol (i.e., fuel cells or conversion to olefins) require lower methanol prices to be competitive in their respective markets. In the economic comparisons below, an alternative methanol price of $85/MT is used to give an example of the economics of GTL/methanol integration with the methanol directed toward alternative markets such as MTO. In such a case the economics of the GTL and integrated GTL/methanol plants are essentially the same. See Table 15.1.3.

If methanol is converted to olefins and polyolefins, it further increases the value added for products derived from natural gas. Other papers have compared the economics of remote gas strategies including LNG, GTL, and GTP.[5,6] GTP offers attractive economics at about the same investment level as GTL because of the higher value of the polyolefin products

TABLE 15.1.3 Economic Comparison of GTL Integrated with Methanol Production

	GTL	GTL/MeOH at $120/MT	GTL/MeOH at $85/MT
Investment, million $	1250	1264	1264
Gas consumed, million SCF/day	450	450	450
GTL products, BPSD	50,000	31,000	31,000
Methanol product, MT/D		5309	5309
Gas cost, million $/yr	80	80	80
Operating cost, million $/yr	78	78	78
Total cash cost, million $/yr	158	158	158
Product revenue, million $/yr	391	459	396
Transportation costs	−27	−38	−38
Net revenue, million $/yr	364	421	357
Gross profit, million $/yr	206	263	200
Gross profit, $/million SCF of gas	1.34	1.72	1.31
Gross profit, $/kNm^3 of gas	50.0	64.2	48.9
Simple ROI	16.5%	20.7%	15.7%
IRR (pretax)	12.8%	16.6%	12.1%

Downloaded from Digital Engineering Library @ McGraw-Hill (www.digitalengineeringlibrary.com)
Copyright © 2004 The McGraw-Hill Companies. All rights reserved.
Any use is subject to the Terms of Use as given at the website.

OLEFIN PRODUCTION FROM METHANOL

compared to liquid fuels, even when those fuels command a price premium over conventional fuels. GTP offers gross profits equivalent to $5.70/1000 SCF of gas consumed. This is more than 4 times the corresponding gross profit offered by GTL. This helps GTP to be economical at a smaller scale than GTL, so it can be utilized in moderate- as well as large-sized gas fields.

GTL offers huge potential for gas utilization because it links natural gas to markets historically supplied by products derived from crude oil. This is of strategic importance to many, because the world's gas reserve base is greater than the oil reserve base and gas discovery rates exceed oil discovery rates. When crude oil prices are high, GTL can offer attractive economics, but the potential for lower oil prices raises concerns about economic risks for GTL. One way to help mitigate such risks is to produce products with greater value margins. This is evidenced by the GTL/GTP example shown in Table 15.1.4.

In the example for GTL/GTP, 38 percent of the syngas was used for methanol production and subsequently converted to primarily ethylene and propylene and then converted to polyethylene and polypropylene. The remaining 62 percent of the syngas was converted to FT liquids. Although this requires a substantially greater investment, it doubles the gross profits per thousand standard cubic feet of natural gas consumed and increases the project IRR from about 13 percent for GTL to almost 17 percent for the integrated GTL/GTP project. In this example the MTO C_4+ by-products were used as fuel. This minimizes the amount of by-products from the complex but only provides the minimum value for this material. If these by-products are either shipped separately or blended into the FT liquid product streams, they can provide a significantly higher value and thereby further increase the IRR of the project.

Also shown in Table 15.1.4 are the economics of integrating a conventional steam cracker and polyolefin plants with GTL. There is less synergy in this integration because

TABLE 15.1.4 Economic Comparison of GTL Integrated with Polyolefin Production

	GTL	GTP	GTL/GTP	GTL/cracker/ polyolefin
Investment, million $	1250	1210	2030	2230
Gas consumed, million SCF/day	450	155	434	450
GTL products, BPSD	50,000	—	31,000	22,000
Polyethylene, MT/D	—	882	882	1300
Polypropylene, MT/D	—	882	882	490
Other by-products, MT/D	—	—	—	1491
Gas cost, million $/yr	80	27	77	80
Operating cost, million $/yr	78	99	150	176
Total cash cost, million $/yr	158	126	227	256
Product revenue, million $/yr	391	452	694	708
Transportation costs	−27	−24	−41	−42
Net revenue, million $/yr	364	428	653	666
Gross profit, million $/yr	206	301	426	410
Gross profit, $/million SCF of gas	1.34	5.72	2.89	2.68
Gross profit, $/kNm^3 of gas	50.0	213.5	107.9	100.0
Simple ROI	16.5%	24.9%	21.0%	18.4%
IRR (pretax)	12.8%	20.0%	16.9%	14.6%

Downloaded from Digital Engineering Library @ McGraw-Hill (www.digitalengineeringlibrary.com)
Copyright © 2004 The McGraw-Hill Companies. All rights reserved.
Any use is subject to the Terms of Use as given at the website.

OLEFIN PRODUCTION FROM METHANOL

all the syngas must first be converted to FT liquids. In this example, 22,000 BPSD of FT liquids would remain for shipping in addition to more than 350,000 MTA of cracker liquid by-products. These by-products would consist of crude C_4s (~33 percent), pyrolysis gas (~59 percent), and fuel oil (~8 percent). With a substantially higher investment, additional facilities could be installed to recover butadiene, benzene, toluene, and xylenes from these streams. This would also require additional product storage for these extra products. The GTL/cracker integration option offers slightly better economics compared to GTL, but it requires the largest investment, produces the largest number of products to be shipped from the remote location, and is less economical than the GTL/GTP integration.

The demand for additional ethylene and propylene capacity is expected to require about 60 million MTA of additional ethylene production and 30 million MTA of additional propylene production by the year 2015. If we assume that about 3 million BPSD of GTL capacity comes on-stream during this same period, then approximately 840,000 BPSD of FT derived naphtha would be produced and 27 billion SCF/day (723 million Nm^3) of natural gas would be consumed. If this naphtha were cracked to produce ethylene and propylene, then about 14 million MTA of ethylene and 5 million MTA of propylene would be produced. This leaves over 75 percent of the additional ethylene production and over 80 percent of the additional propylene production to be supplied by other sources.

If this same amount of natural gas were consumed in an integrated GTL/GTP facility, about 1.86 million BPSD of GTL liquids or 521,000 MTA of FT derived naphtha would be produced. In addition, about 18.4 million MTA of ethylene and 18.4 million MTA of propylene would be produced by the MTO process. Assuming the naphtha is shipped to other locations to be cracked to light olefins, this would bring the total ethylene production to 27.1 million MTA (18.4 + 8.7) and the total propylene production to 21.5 million MTA (3.1 + 18.4). This still leaves about 55 percent of additional ethylene and almost 30 percent of additional propylene demand remaining for supply by other routes.

ECONOMIC SENSITIVITY

The economic impact of various corresponding crude oil prices is shown in Fig. 15.1.6. In general, polyolefin prices tend to trend along with crude oil prices, but there can be a lot of scatter in the prices due to market conditions. However, each of these options achieves better economics as oil prices increase. GTL is slightly more sensitive to crude oil pricing

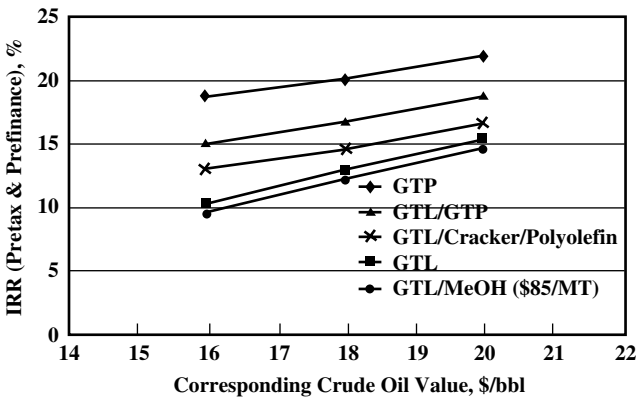

FIGURE 15.1.6 Economic sensitivity to corresponding crude oil prices.

Downloaded from Digital Engineering Library @ McGraw-Hill (www.digitalengineeringlibrary.com)
Copyright © 2004 The McGraw-Hill Companies. All rights reserved.
Any use is subject to the Terms of Use as given at the website.

OLEFIN PRODUCTION FROM METHANOL

and it will start to approach GTP economics as crude oil prices reach close to $30/bbl.

Stand-alone GTL projects can look attractive when crude oil prices are about $20/bbl or higher. Integrated GTL/GTP projects can offer similar returns when market prices correspond to crude oil priced at $16/bbl or higher.

CONCLUSIONS

- Producing products with higher value than fuel-grade materials requires greater investment but enhances GTL project economics.
- Olefin and polyolefin production offers larger market potential for remote gas utilization compared to conventional methanol markets.
- New methanol production technology combined with remote gas pricing can provide methanol delivered at less than $90/MT.
- The UOP/Hydro MTO process provides an ideal link between methanol and polyolefin production at world-scale capacities.
- GTP offers the highest returns for remote gas monetization.
- GTL/GTP integration offers large market potential for remote gas monetization and significantly better economics compared to stand-alone GTL projects, but at a higher investment cost.
- GTL/GTP integration offers lower cost and better economic returns compared to the integration of GTL with conventional cracking and polyolefin production facilities.
- GTL/GTP integration can offer attractive project economics at market prices corresponding to $16/bbl to $18/bbl crude oil.

REFERENCES

1. S. L. Wedden, "GTL Prospects," *Oil Gas J.,* 58–63, Mar. 12, 2001.
2. C. Eng, G. A. Peterson, T. Fuglerud, S. Kvisle, and H. Nilsen, "The UOP/Hydro MTO Process for Higher Natural Gas Profitability," Association Française de Techniciens et Professionels du Pétrole (AFTP) Seminar, Paris, France, Oct. 7, 1998.
3. *Proceedings of the Gas-to-Liquids Clean Fuels Strategy Conference,* London, November 1998.
4. Chem Systems, "Developments in Methanol Production Technology," Process Evaluation Research Planning (PERP), 96/97S14, August 1998.
5. B. V. Vora, C. N. Eng, E. C. Arnold, H. Nilsen, S. Kvisle, and T. Fuglerud, "Natural Gas Utilization at Its Best," presented at Petrotech 98, Bahrain, September 1998.
6. J-M. Jaubert, F. Bouvart, S. A. Gembicki, and J. M. Andersen, "Natural Gas to Polyolefins," Qatar, March 2001.

Downloaded from Digital Engineering Library @ McGraw-Hill (www.digitalengineeringlibrary.com)
Copyright © 2004 The McGraw-Hill Companies. All rights reserved.
Any use is subject to the Terms of Use as given at the website.

Source: HANDBOOK OF PETROLEUM REFINING PROCESSES

CHAPTER 15.2

THE SYNTROLEUM® PROCESS OF CONVERTING NATURAL GAS INTO ULTRACLEAN HYDROCARBONS

Larry Weick and Matthew Nimmo
Syntroleum Corporation
Tulsa, Oklahoma

INTRODUCTION

As used in this chapter, the term *gas-to-liquids* (or GTL) refers to a process that converts natural gas into synthetic, ultraclean liquid fuels that contain no sulfur, aromatics, or heavy metals. GTL technology is increasingly being considered as a tool for monetizing stranded gas reserves and for mitigating some of the environmentally driven challenges that are currently confronting the petroleum industry.

From the perspective of energy supply, there are increasing pressures to monetize ever-growing reserves of natural gas. Currently, proven world reserves of natural gas are estimated to be in excess of 5200 Tft^3.[1] More than one-half of these resources are considered stranded—uneconomic to transport due to the proximity of potential markets and/or the size of gas deposits, or subquality because of contamination by nitrogen, carbon dioxide, hydrogen sulfide, aromatics, etc.[2] These stranded reserves represent potentially large additions to oil company balance sheets if they can be monetized.

From the perspective of energy demand, the petroleum industry faces a number of challenges with fuels derived from conventional crude oil—environmental mandates for cleaner fuels, raw materials getting heavier and dirtier, process upgrading investments becoming more difficult to justify, and tightening supplies of middle distillates and naphtha. Coupled with improved economics, the possibility of meeting these challenges with GTL technology is spurring increased interest in its commercialization.

This chapter summarizes Fischer-Tropsch (FT) chemistry and provides an overview of Syntroleum's GTL technology, including descriptions for each major section of the process. Quality of fuels produced from a GTL plant is also discussed, including descriptions of emissions, fuel properties, and applications. The report concludes with discussion on the advantages and economics of the Syntroleum Process.

Downloaded from Digital Engineering Library @ McGraw-Hill (www.digitalengineeringlibrary.com)
Copyright © 2004 The McGraw-Hill Companies. All rights reserved.
Any use is subject to the Terms of Use as given at the website.

THE SYNTROLEUM® PROCESS OF CONVERTING NATURAL GAS INTO ULTRACLEAN HYDROCARBONS

HISTORY OF FISCHER-TROPSCH REACTION

In 1923, Franz Fischer and Hans Tropsch of Germany observed that alkalized iron turnings in an atmosphere of carbon monoxide and hydrogen at elevated temperatures and pressures catalyzed the production of oxygenated compounds and hydrocarbons.[3] After 2 years of experimentation, the first Fischer-Tropsch catalyst was reported and consisted of an iron-zinc preparation. After the pioneering work of Fischer and Tropsch in the 1920s, it was several years before Fischer and Kuster first published a report of liquid (slurry) phase carbon monoxide hydrogenation.[4] The earliest known liquid-phase FT patent, awarded to Dr. Mathias Pier of I. G. Farbenindustrie in 1936,[5] was applied for in late 1928, predating Fischer's publications by about 3 years. Subsequent patents issued in the United States and a number of European countries in the late 1930s through the early 1950s[6–24] indicate a fairly high degree of R&D was occurring immediately before and during World War II. The major players were I. G. Farbenindustrie and Ruhrchemie in Germany, while liquid-phase/slurry FT patents were also issued to a number of U.S. companies (M. W. Kellogg Company, Celanese Corporation, The Texas Company, and Standard Oil Development Company). Today, the leading GTL technology holders are Syntroleum, Sasol, Shell, BP Amoco, and ExxonMobil.

HISTORY OF THE SYNTROLEUM PROCESS

Syntroleum's history began in 1984 when the founder, Ken Agee, began experimenting with the use of air as a source of oxygen for the GTL process. After several years of experimenting, the first series of patents were filed in 1988 that were later issued in 1989. In 1990, Syntroleum began the operation of its first pilot plant, which still operates today. The pilot plant has a production rate of 2 barrels per day (BPD) and is used to test a variety of operating conditions for various catalysts. In 1998, Syntroleum's research and development facilities quadrupled with the purchase of a new building and the surrounding 100 acres. During the following year, Syntroleum, along with Arco (now BP), began the operation of a 70-BPD facility using slurry reactor designs. After approximately one year of operation, the demonstration plant was relocated to Tulsa. The demonstration plant will begin operation in 2003 as part of the U.S. Department of Energy's ultraclean fuels program. Fuel demonstrations are planned in the bus fleets of Washington, D.C., Metropolitan Area Transit Authority and Denali National Park. As of 2001, Syntroleum had licensed its technology to several companies, including Texaco, Marathon, Arco, YPF, Enron, Kerr McGee, Ivanhoe, and the Commonwealth of Australia. Syntroleum has also formed many alliances related to fuel production, testing, and certification; catalyst testing and production; and the design of both onshore and floating GTL plants.

PROCESS DESCRIPTION

The Syntroleum Process consists of the following steps for converting natural gas to finished fuel products: (1) gas pretreating, (2) air compression, (3) synthesis gas generation, (4) Fischer-Tropsch synthesis, and (5) product upgrading. The process converts approximately 10,000 standard cubic feet (SCE) of gas into 1 barrel (bbl) of synthetic hydrocarbons. The maximum capacity of each GTL train is about 11,500 BPD. The process produces several by-products, tailgas, water, and heat, which can be used to generate other products from the plant, such as exportable electricity and steam for desalination. The Syntroleum Process can be adapted for either offshore or onshore applications and can be designed for small gas fields. Figure 15.2.1 is a process flow diagram of the inside-battery-limits (ISBL) portion of the Syntroleum Process.

Downloaded from Digital Engineering Library @ McGraw-Hill (www.digitalengineeringlibrary.com)
Copyright © 2004 The McGraw-Hill Companies. All rights reserved.
Any use is subject to the Terms of Use as given at the website.

THE SYNTROLEUM® PROCESS OF CONVERTING NATURAL GAS INTO ULTRACLEAN HYDROCARBONS

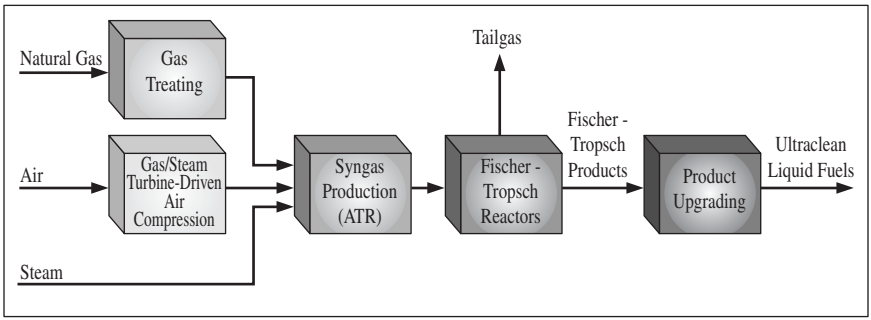

FIGURE 15.2.1 Process flow diagram of Syntroleum Process.

TABLE 15.2.1 Syntroleum Gas Feed Specifications

Components	Limit
Ethane and heavier	Less than 5 mol %
CO_2	Less than 20 mol %
N_2	Less than 25 mol %
Sulfur compounds	Less than 10 ppm

Feed Gas Pretreating

The feed gas pretreating section is determined by the gas composition and Syntroleum's feed gas specifications, which are based upon those components that are detrimental to the catalytic reactor systems. The gas feed specifications are summarized in Table 15.2.1.

For example, for a gas composition that does not exceed the limitations in Table 15.2.1, minimal gas pretreating is required. In this case, sulfur removal is the only gas treatment needed. Cobalt/molybdenum (Co/Mo) and zinc oxide (ZnO) guard beds are used to reduce the sulfur concentration to 100 ppb for the catalytic processes. When the limitations of CO_2 and/or sulfur are exceeded, the cost of treatment determines whether the gas is feasible for use. Finally, gas that exceeds the specification for ethane and heavier molecules either can be processed to recover and sell natural gas liquids (NGLs) for additional revenue or can be processed to reform the C_2+ components into methane for use as feedstock. The choice will depend on the amount of recoverable NGLs and market conditions. Overall, the robust gas specifications of the Syntroleum Process enable many gas fields that are considered marginal to be monetized.

Air Compression

Unique to the Syntroleum Process is its use of air as an oxygen source. A process air compressor driven by a steam or gas turbine supplies the synthesis gas generation section with the stochiometric amount of oxygen (as contained in air) required to generate a synthesis gas ratio of approximately 2 : 1 (H_2:CO). The inlet air is filtered to avoid corrosion and erosion of the rotating components and deactivation of the downstream catalyst. Gas turbines are commercially available that will burn low-Btu tailgas, a by-product generated from the FT reactors. In addition to providing fuel value, this tailgas stream represents a large mass flow of high-pressure gas that aids in the generation of shaft power from the expander end of the gas turbine. For a steam turbine, the tailgas is utilized for the production of steam.

Downloaded from Digital Engineering Library @ McGraw-Hill (www.digitalengineeringlibrary.com)
Copyright © 2004 The McGraw-Hill Companies. All rights reserved.
Any use is subject to the Terms of Use as given at the website.

THE SYNTROLEUM® PROCESS OF CONVERTING NATURAL GAS INTO ULTRACLEAN HYDROCARBONS

Synthesis Gas Production

The Syntroleum Process produces a nitrogen-diluted stream of synthesis gas, a mixture of carbon monoxide and hydrogen, using Syntroleum's proprietary autothermal reactor (ATR). Pretreated natural gas, steam, and air are thoroughly mixed before entering the bed in the ATR. The reaction proceeds over a commercially available catalyst and yields syngas having a H_2:CO ratio of approximately 2 : 1. The reactions that take place in the ATR are shown in Fig. 15.2.2.

The net thermal result of all three reactions is a surplus of heat, which is used to raise high-pressure steam. Water coproduced within the syngas is recovered, treated, and used as makeup water. The catalyst can be regenerated periodically, if required, with air and hydrogen to remove any coke formation and has an expected minimal life of 4 years. After exiting the vessel, the synthesis gas is cooled and compressed prior to entering the Fischer-Tropsch reactors.

Fischer-Tropsch Synthesis

Nitrogen-diluted synthesis gas from the ATR is compressed and enters the Fischer-Tropsch reactors to predominantly produce paraffinic, synthetic hydrocarbons. The compressed synthesis gas flows into the bottom of the FT reactor and is bubbled through a slurry of Fischer-Tropsch liquid and suspended solid particles of a proprietary and commercially available cobalt catalyst. On the active surface of the catalyst, carbon monoxide is hydrogenated into paraffinic hydrocarbons of various molecular weights. The balanced reaction is shown in Fig. 15.2.3. Excess heat produced from the Fischer-Tropsch reactions is removed by raising low-pressure steam. Syntroleum catalysts yield a Shultz-Fluory-Anderson distribution corresponding to an alpha ranging from 0.88 to 0.94, depending on the formulation. Unreacted synthesis gas exits the top of the reactor and may become the feedstream for the subsequent stage or a fuel for the gas turbine. The cobalt catalyst has an expected minimal life of 4 years and is continuously regenerated to sustain high levels of activity. Each reactor produces two streams of hydrocarbons—light Fischer-Tropsch liquid (LFTL) and heavy Fischer-Tropsch liquid (HFTL); and three by-products—water, tailgas, and heat. The unrefined heavy and light Fischer-Tropsch streams are sent to the product upgrading section for processing into fuels. Syntroleum has also developed and licenses the Fischer-Tropsch reaction of a fixed bed design.

	Catalyst	
Reaction 1: $CH_4 + 1.5O_2$	$\rightarrow$	$CO + 2H_2O$
Reaction 2: $CH_4 + H_2O$	$\rightarrow$	$3H_2 + CO$
Reaction 3: $CO + H_2O$	$\rightarrow$	$H_2 + CO_2$

FIGURE 15.2.2 Synthesis gas generation.

Synthesis gas (diluted with nitrogen)	Catalyst	Hydrocarbons	Water	Nitrogen
$n(2H_2 + CO) + N_2$	$\rightarrow$	$-(CH_2)_n- +$	nH_2O +	N_2

FIGURE 15.2.3 Fisher-Tropsch reaction.

Downloaded from Digital Engineering Library @ McGraw-Hill (www.digitalengineeringlibrary.com)
Copyright © 2004 The McGraw-Hill Companies. All rights reserved.
Any use is subject to the Terms of Use as given at the website.

THE SYNTROLEUM® PROCESS OF CONVERTING NATURAL GAS INTO ULTRACLEAN HYDROCARBONS

Product Upgrading

The final step in a Syntroleum GTL fuels plant is product upgrading (upgrader), which converts the waxy effluent from the FT reactions into useful fuels. The upgrader consists of distillation and hydroprocessing units that are of similar configurations found in conventional petroleum-based refineries. As in petroleum-based refineries, the upgrader's exact configuration and processing scheme will depend upon the facility's particular product slate and associated specifications. Although the processing schemes may be varied, several general processing requirements are needed and can be broken down into the following major areas:

1. Distillation of the FT effluent into two or more fractions
2. Hydroprocessing of one or more of the fractions to improve low-temperature properties
3. Distillation of the hydroprocessed effluent streams into finished products

Due to the high purity and low variability of the FT stream, the Syntroleum upgrader will have a lower capital and operating cost than that of an equivalent petroleum-based system. Specific areas of cost savings include these:

- Since there is no sulfur in the feed, the metallurgical requirements of the hydroprocessing unit are reduced, resulting in a lower cost (e.g., no stainless overlay is required for the reactor). Also, sulfur recovery requirements are completely eliminated.
- Hydrogen consumption is lower (<50 percent of a typical sour feedstock), which reduces not only the operating costs associated with producing hydrogen, but also compression requirements on both the makeup and reactor recycle gas loop.
- Hydroprocessing conditions are milder (i.e., lower pressures and temperatures) and bear more resemblance to a fuels hydrotreating unit than to a fuels hydrocracker.
- The need for an independent residual cracker or coking unit is eliminated due to the ability of high-molecular-weight normal paraffins to crack into lower-molecular-weight paraffins in the fuels hydroprocessing unit itself. Contaminants, such as polynuclear aromatics and heavy metals (e.g., nickel and vanadium), are not present in the feed, and therefore the unconverted bottoms can be recycled to extinction.

Syntroleum uses commercially available hydroprocessing catalysts in its licensed hydrocracker and hydrotreating units. Overall, these attributes reduce the complexity and cost of producing ultraclean fuels compared to a conventional crude oil refinery.

ADVANTAGES OF THE SYNTROLEUM PROCESS

The Syntroleum Process has several advantages over competing processes. The process utilizes air instead of pure oxygen to generate FT liquids. This reduces the cost of the plant and increases the safety of plant personnel. Additionally, the process produces several recoverable by-products—tailgas, heat, and water. These by-products are used to reduce the operating costs of the plant and to provide additional revenue. The process has the advantage of being flexible in terms of operating configuration and feedstock quality, allowing the process to be adapted to a range of environments. Finally, as detailed earlier, the lack of contaminants, sulfur, aromatics, and heavy metals simplifies the refining section of the plant.

Oxygen versus Air

The use of ambient air as the source of oxygen in the ATR is a unique characteristic of the Syntroleum Process that has several advantages over competing processes, which utilize

Downloaded from Digital Engineering Library @ McGraw-Hill (www.digitalengineeringlibrary.com)
Copyright © 2004 The McGraw-Hill Companies. All rights reserved.
Any use is subject to the Terms of Use as given at the website.

THE SYNTROLEUM® PROCESS OF CONVERTING NATURAL GAS INTO ULTRACLEAN HYDROCARBONS

air separation units to obtain a pure stream of oxygen. First, ambient air utilization has significantly lower capital and operating costs, because no refrigeration, which requires costly metallurgy and a considerable amount of electricity (often not included in efficiency calculations), is avoided. The Syntroleum Process uses off-the-shelf turbines and compressors to supply air to the reactors. These turbines and compressors are commonly used in power plant projects and oil and gas operations. Second, liquid oxygen is extremely explosive and requires highly trained and experienced personnel and a rigorous maintenance schedule to reduce the risk of accidents. To the contrary, the use of air reduces increases safety of the plant, because the presence of inert nitrogen in the Syntroleum Process provides additional thermal control of the energy released from the ATR and FTR reactions. The resulting thermal control benefits of nitrogen from the use of air are (1) a fairly uniform temperature profile, (2) moderation of the temperature rise in the ATR, (3) more efficient heat removal in the FT reactor, and (4) minimal coke formation.

Even though the Syntroleum Process uses air instead of pure oxygen, the Syntroleum FT reactors are not twice as big and therefore not more expensive than oxygen-blown FT reactors. The Syntroleum Process operates on a single-pass basis; the oxygen-blown processes operate with a recycle loop. Due to recycle, inerts (CO_2, C_1, C_2, etc.) accumulate, dilute the synthesis gas, and act in much the same manner as nitrogen in the Syntroleum Process. The net effect is that the combined air feed system and the FT reactor system of the Syntroleum Process will in most cases cost less than the air separation unit and FT reactor system of an oxygen-blown system.

By-products

All three by-products—water, tailgas, and heat—are recovered and utilized in the process for makeup water, plant fuel, steam generation, and/or producing additional exportable products to nearby markets. Approximately 1.1 bbl of water is produced for every barrel of unrefined hydrocarbon. The water contains contaminants including suspended paraffins and small amounts of dissolved oxygenates, such as alcohols, and inorganic ions, such as ammonia. The water is fed to a wastewater stripper, where volatiles are removed and sent to a pre-reformer for recovery of hydrocarbon value. The stripped water is routed to the wastewater treatment plant for conditioning as makeup water for cooling towers and process boilers. The second by-product, tailgas, is a clean-burning and abundant source of energy that fuels low-Btu heaters, gas turbines, and any additional power generation. The tailgas displaces the use of natural gas and therefore reduces operating costs and increases plant efficiency. The tailgas can also be sold to nearby refineries for steam or power generation. The final by-product is high-pressure and medium-pressure steam, raised from the ATR and FT reactor, respectively. The steam is used in a variety of applications, ranging from steam turbine operations for power generation and/or compression to water reclamation, such as water stripping and desalination.

Process Flexibility and Simplicity

The Syntroleum Process has a tremendous amount of flexibility. Under appropriate conditions, the process can be economically designed to produce as little as 6000 BPD of synthetic fuels. Reserves of less than 500 BCF recoverable gas would be required to produce 6000 BPD of synthetic fuels for 20 years. The process can also be configured to produce surplus electricity for sale. For example, the tailgas and steam can be used as fuel for power generation in gas turbine(s), and flue gas from the gas turbines can be routed to heat recovery steam generators (HRSGs) to raise additional steam for additional power. Also, the process can be designed for marine applications with the use of floating production, storage, and

Downloaded from Digital Engineering Library @ McGraw-Hill (www.digitalengineeringlibrary.com)
Copyright © 2004 The McGraw-Hill Companies. All rights reserved.
Any use is subject to the Terms of Use as given at the website.

THE SYNTROLEUM® PROCESS OF CONVERTING NATURAL GAS INTO ULTRACLEAN HYDROCARBONS

off-loading systems (FPSOs) and barges. Offshore infrastructure for processing and transporting gas to markets is typically designed around a collection of gas and oil discoveries. In many cases, the cost of transporting the gas onshore is prohibitive, and therefore the gas is reinjected, flared, and/or vented after condensate and/or LPG has been removed. Floating plants of the Syntroleum Process would enable gas in such isolated fields to be produced and converted to higher-valued products. Finally, perhaps someday, surplus steam and tailgas generated from the process will be used to produce gas from the largest known source of natural gas—methane hydrates. Conceptually, the tailgas and steam from the plant would be used to heat seawater to produce a heated brine solution, which would be used to melt the hydrates and free the gas for conversion into synthetic hydrocarbons.

QUALITY OF FUELS PRODUCED FROM SYNTROLEUM PROCESS

The attributes of the synthetic fuels are discussed in the following sections. The synthetic fuel data reflect a 2001 analysis conducted by Syntroleum at its laboratories, national laboratories, including Southwest Research Institute, and car manufacturers, including Volkswagen and Daimler Chrysler.

Synthetic Diesel (S-2)

Synthetic diesel produced from the Syntroleum Process, also known as S-2, is a highly paraffinic, high-cetane distillate product suitable for conventional and advanced compression ignition diesel engines and fuel cells. S-2 is physically similar to petroleum-based diesel fuels, but with superior combustion emission characteristics. At ambient temperature and pressure, S-2 is a colorless, stable, environmentally safe liquid that can be shipped, stored, and dispensed using the same fuel distribution and handling procedures as petroleum diesel. A comparison of the S-2 to other conventional diesel fuels is shown in Table 15.2.2.

Due to its attributes, S-2 outperforms diesel fuel produced from crude oil. First, due to its high paraffin content (99 percent) and absence of aromatics, S-2 has a cetane number of 74. As a comparison, the minimum cetane number in the United States is 40 and in Europe is 50. With its inherent high cetane number, S-2 will reduce the ignition delay periods, especially for cold starts, and increase power and performance without the need of cetane additive. Also S-2 contains no detectable amounts of sulfur, aromatics, or heavy metals. Because of this attribute, tests by Southwest Research Institute have confirmed that S-2 has reduced emissions in every category of criteria pollutant compared to EPA no. 2 diesel, CARB diesel, and Swedish City diesel. The results of these tests are summarized in Table 15.2.3. Furthermore, since S-2 contains no measurable olefins or aromatics, the fuel does not exhibit stability problems, such as gum formation and insoluble organics associated with conventional diesel fuels. Another advantage due to the absence of contaminants is S-2's compatibility with emission after-treatment devices and fuel cells, which are sensitive to

TABLE 15.2.2 Specifications of Diesel Fuels Tested by SWRI

Specifications	S-2	EPA no. 2	CARB	Swedish
Specific gravity	0.77	0.85	0.83	0.82
Sulfur, ppm	0	350	155	<10
Aromatics, vol %	0	31	8	4
Cetane number	74	47	51	52

Downloaded from Digital Engineering Library @ McGraw-Hill (www.digitalengineeringlibrary.com)
Copyright © 2004 The McGraw-Hill Companies. All rights reserved.
Any use is subject to the Terms of Use as given at the website.

THE SYNTROLEUM® PROCESS OF CONVERTING NATURAL GAS INTO ULTRACLEAN HYDROCARBONS

TABLE 15.2.3 Criteria Pollutant Emissions from S-2

	Measured emission, g (bhp·h)r			
Fuel tested	HC	CO	NO_x	PM
EPA no. 2 diesel	0.12	1.2	4.0	0.10
CARB diesel	0.09	1.1	3.7	0.08
Swedish City diesel	0.09	1.2	3.6	0.08
S-2	0.07	0.8	3.2	0.06

the sulfur levels in diesel fuel. Since S-2 contains no sulfur or heavy metals, these catalytic after-treatment devices are not susceptible to deactivation caused by contaminants normally found in conventional fuels. Finally, S-2 has excellent low-temperature properties due to a high percentage of isoparaffins. Testing has demonstrated that the cloud point and the cold filter plugging can be as low as −30 and −34°C, respectively. This implies that S-2 will not require additives to improve the low-temperature properties and that engines using S-2 in cold environments will not be as susceptible to clogged fuel lines and filters as engines using conventional diesel.

Synthetic Naphtha (FC-2)

FC-2 is an ultraclean, synthetic naphtha that is saturated with hydrogen and has many applications in the petrochemical and fuels industry. FC-2 is free of aromatics, metals, and sulfur and is composed of >99.99 percent naphtha. With these qualities, FC-2 can be utilized for feedstocks in ethylene crackers, fuel cells, and low-compression engines (4 : 1 or less) or undergo further processing into upgraded products, such as high-octane gasoline and liquefied petroleum gas.

Ethylene Feedstock Applications. FC-2 is an excellent ethylene cracker feedstock. Naphtha feedstocks with a high paraffin content are preferred, because they produce much higher yields of light olefins. As stated earlier, FC-2 has a paraffin content of 99.99 percent, a content higher than that of any naphtha isolated from a conventional crude oil, such as Saudi Arabia's A-180 natural gasoline, which has a paraffin content in the range of 90 to 95 percent.

Combustion Engine/Heating Applications. Due to its high paraffin content, FC-2 has a low octane rating of approximately 30, making it an ideal straight-run fuel for low-compression (4:1) engines. However, the octane level of FC-2 can be upgraded for vehicular use with the addition of an akylation unit. Alternatively, FC-2 can be cracked into liquefied petroleum gas (LPG). This would provide a sulfur-free fuel for residential and commercial heating needs. Finally, FC-2 is an excellent fuel substitute that is currently being used in industrial turbines. A significant reduction of emissions would result, eliminating the need for expensive scrubbing of the exhaust.

Fuel Cell Applications. As a fuel-cell fuel, FC-2 is a very attractive fuel for generating hydrogen. The paraffinic nature of FC-2, more specifically the lack of unsaturated and aromatic hydrocarbons, favors minimal coking in the reforming step of the fuel cell. Additionally, the lack of sulfur and heavy metals in FC-2 prevents the need for sulfur removal beds or guard beds to protect the reforming catalyst. In comparison to other fuels, tests conducted by IdaTech showed that the hydrogen yield

Downloaded from Digital Engineering Library @ McGraw-Hill (www.digitalengineeringlibrary.com)
Copyright © 2004 The McGraw-Hill Companies. All rights reserved.
Any use is subject to the Terms of Use as given at the website.

THE SYNTROLEUM® PROCESS OF CONVERTING NATURAL GAS INTO ULTRACLEAN HYDROCARBONS

per unit volume is nearly double that of CNG or methanol. These attributes are expected to contribute significantly toward minimal operating costs and favorable overall economics of a FC-2 fuel cell.

Synthetic LPG

Synthetic LPG is used for domestic heating, cooking, and transportation and has outstanding qualities when compared to conventional LPG. Synthetic LPG contains no contaminants such as hydrogen sulfide, carbon dioxide, oxygen compounds, and moisture that are commonly found in conventional LPG. Because of these attributes, synthetic LPG does not require any gas conditioning, such as dehydration or amine processing. The lack of contaminants also implies that synthetic LPG can be handled more safely and will have a higher performance for end-use markets, especially in terms of emissions.

CAPITAL INVESTMENT REQUIREMENTS

Several key variables affect the profitability of a GTL plant; these variables include the capacity of the plant, capital cost of the plant (Table 15.2.4), gas price, operating and maintenance costs, and transportation costs. Only a detailed front-end engineering design for a site-specific project can provide a definitive cost estimate. The cost information provided here is based on generic studies, which typically have an accuracy of ±30 percent. The cost estimate is based upon the following:

- Capital cost estimate is based on U.S. Gulf Coast pricing in 2001 U.S. dollars.
- Capital cost estimate includes home office/EPC costs of 15 percent.
- Capital cost estimate has an accuracy of ±30 percent.
- Operating cost estimate excludes cost of natural gas.
- The following exclusions apply: gas pipeline and other gas transportation costs outside plant fence, cost of recovering NGLs from feed gas, unusual water acquisition costs, cost of land, taxes, licenses, permits, duties, start-up costs, insurance, and cost of front-end engineering design.

REFERENCES

1. Energy Information Administration Web site: www.eia.doe.gov.
2. B. Eisenberg et al., "Advanced Gas Conversion Technology for Remote Natural Gas Utilization," GPA Convention Paper, March 1994, p. 1.
3. Henry H. Storch, *The Fischer-Tropsch and Related Synthesis,* Wiley, New York, 1951, p. 1.

TABLE 15.2.4 Generic Economics of Syntroleum GTL Plant

Capital cost estimate	
Capital cost of plant	$25,000/bbl of daily capacity
Operating cost	$5.00/bbl

Downloaded from Digital Engineering Library @ McGraw-Hill (www.digitalengineeringlibrary.com)
Copyright © 2004 The McGraw-Hill Companies. All rights reserved.
Any use is subject to the Terms of Use as given at the website.

THE SYNTROLEUM® PROCESS OF CONVERTING NATURAL GAS INTO ULTRACLEAN HYDROCARBONS

4. F. Fischer and K. Peters, "Catalytic Gas Reactions in Liquid Medium," *Brennstoff-Chem.,* **12:** 286–293, 1931.
5. M. Pier, (I. G. Farbenindustrie), "Verfahren zur katalytischen Reduktion der Oxyde des Kohlenstoffs," German Patent 630,824, May 14, 1936.
6. I. G. Farbenindustrie, "Improvements in the Manufacture and Production of Hydrocarbons of High Boiling Point," British Patent 449,274, June 24, 1936.
7. I. G. Farbenindustrie, "Improvements in and Apparatus for the Conversion of Oxides of Carbon and Hydrogen," British Patent 468,434, June 29, 1937.
8. Standard Oil Development Company, "An Improved Method of Controlling Exothermic Catalytic Reactions," British Patent 496,159, Nov. 25, 1938.
9. H. Dreyfus, "Improvements in or Relating to the Manufacture of Hydrocarbons and Other Products from Carbon Monoxide and Hydrogen," British Patent 505,121, May 5, 1939.
10. F. Duftschmid, E. Linckh, and F. Winkler, (I. G. Farbenindustrie), "Production of Valuable Hydrocarbons and Their Derivatives Containing Oxygen," U.S. Patent 2,159,077, May 23, 1939.
11. International Hydrocarbon Synthesis Company, "Procédé de synthèse catalytique en général et plus particulièrement applicable à la production synthétique d'hydrocarbures liquides à partir de mèlanges gazeux à synthèse comprenant du monoxyde de carbone et de l'hydrogène," French Patent 855,378, Feb. 12, 1940.
12. H. Tramm (Internal Hydrocarbon Synthesis Company), "Forfaringssatt vid syntetisk framstalling av kolvaten ur koloxid och vate samt pa sa satt framstalla produkter," Swedish Patent 104,113, June 18, 1941.
13. E. W. Riblett, (M. W. Kellogg Company), "Method of Catalytic Synthesis," U.S. Patent 2,250,421, July 22, 1941.
14. International Hydrocarbon Synthesis Company, "Procedimento per aumentare la resa in indrocarburi che bollono nel campo di ebollizione di olio per diesel, nella sintesi da monoossido di carbonio e idrogeno," Italian Patent 389,201, Oct. 29, 1941.
15. International Hydrocarbon Synthesis Company, "Procedimento per la produzione di olio da gas nell'idrogenazione catalitica di ossidi di carbonio," Italian Patent 390,152, Nov. 27, 1941.
16. International Hydrocarbon Synthesis Company (H. Tramm), "Forfaringssatt vid syntetisk framstalling av kolvaten ur koloxid och vate samt pa sa satt framstalla produkter 482kb," Swedish Patent 104,113, Mar. 31, 1942.
17. H. Tramm and W. Wischermann, (Ruhrchemie), "Verfahren zur Durchführung der Kohlenoxydhydrierung über in flüssigem Medium aufgeschlämmten Kontakten," German Patent 744,185, Nov. 18, 1943.
18. H. Dreyfus, "Improvements Relating to the Production of Hydrocarbons," British Patent 564,730, Oct. 11, 1944.
19. H. Dreyfus (Celanese Corporation), "Production of Organic Compounds," U.S. Patent 2,361,997, Nov. 7, 1944.
20. H. Kolbel and P. Ackermann, (Steinkohlenbergwerk Rhienpreussen), "Verfahren zur Durchführung der Kohlenoxydhydrierung," German Patent 766,025, Feb. 8, 1945.
21. M. M. Stewart, R. C. Garrett, and E. E. Sensel, (The Texas Company), "Method of Effecting Catalytic Reaction between Carbon Monoxide and Hydrogen," U.S. Patent 2,433,072, Dec. 23, 1947.
22. F. J. Moore (The Texas Company), "Method of Effecting Catalytic Reactions," U.S. Patent 2,440,109, Apr. 20, 1948.
23. F. Schnur (Ruhrchemie), "Verfahren zur katalytischen Kohlenoxydhydrierung in flussiger Phase," German Patent 817,596, Aug. 30, 1951.
24. H. Kolbel and P. Ackermann, (Steinkohlenbergwerk Rhienpreussen), "Verfahren zur Durchführung der Kohlenoxydhydrierung in einem flüssigen Medium," German Patent 764,166, Dec. 4, 1952.

Downloaded from Digital Engineering Library @ McGraw-Hill (www.digitalengineeringlibrary.com)
Copyright © 2004 The McGraw-Hill Companies. All rights reserved.
Any use is subject to the Terms of Use as given at the website.

Source: HANDBOOK OF PETROLEUM REFINING PROCESSES

CHAPTER 15.3
SHELL MIDDLE DISTILLATE SYNTHESIS (SMDS) PROCESS

F. J. M. Schrauwen
Shell International Oil Products
Shell Global Solutions International B. V.
Amsterdam, The Netherlands

GAS-TO-LIQUIDS CONVERSION

Most of the world's natural gas (NG) resources are remote from the market. Their exploitation is constrained by high transportation costs and by market outlets. To improve economic utilization of NG, techniques other than transport by pipeline or physical liquefaction (LNG) have been developed. Chemical conversion [gas to liquids (GTL)] to easily transportable and marketable liquid hydrocarbons is now a proven technology.

One driving force for GTL technology is the market pull for clean transportation fuels, in particular gas oil (diesel) fuel. NG conversion produces an exceptional quality of gas oil, free from sulfur and aromatics, with excellent (blending) properties to meet future anticipated gas oil requirements anywhere in the world. Another driving force is the LNG market; limitations to absorb all potential LNG supplies are becoming apparent. Conversion of natural gas to middle distillates provides development of remote gas without dependence on gas markets; the products are marketed into the huge global market for distillates. A large GTL plant with 600 million SCF/day NG intake produces some 3 million TPA middle distillates, some 0.2 percent of today's 2000 million TPA middle distillate global demand. Current world LNG market is approximately 100 million TPA and methanol 30 million TPA (Fig. 15.3.1).

INTRODUCTION

Gas-to-liquids technology is a method to convert natural gas into liquid hydrocarbons. The Fischer-Tropsch process for synthesis of hydrocarbon fuels using metal catalyst at low pressure was patented in 1926. It was used in Germany during World War II and in South Africa for coal conversion to replace oil imports. For a long time the process was not economically viable. For natural gas conversion this is now changing with the development of new and efficient technology.

The potential of GTL technology has resulted in a number of companies searching for opportunities to apply the technology for valorization of remote gas reserves. GTL

Downloaded from Digital Engineering Library @ McGraw-Hill (www.digitalengineeringlibrary.com)
Copyright © 2004 The McGraw-Hill Companies. All rights reserved.
Any use is subject to the Terms of Use as given at the website.

SHELL MIDDLE DISTILLATE SYNTHESIS (SMDS) PROCESS

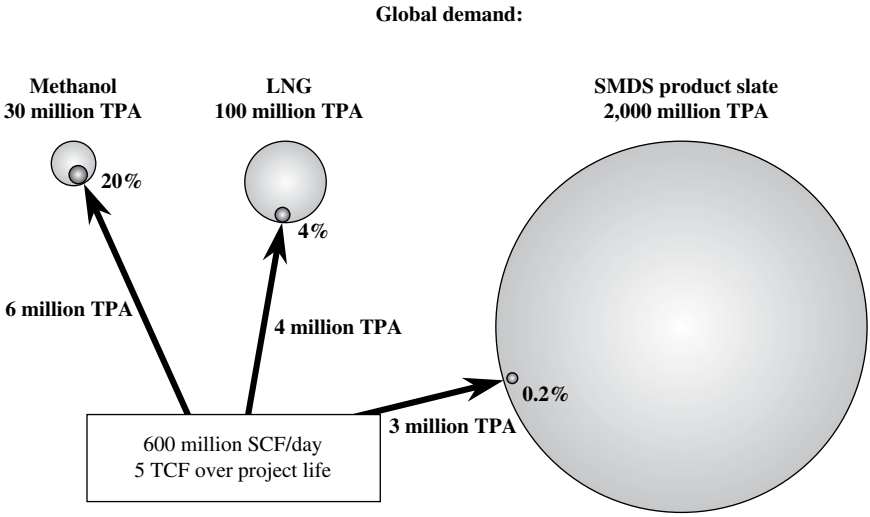

FIGURE 15.3.1 Market impact of NG-derived products.

technology offers a new way to produce middle distillates without coproduction of refinery residuals.

The first commercial SMDS project was approved in 1989; the plant was constructed in Bintulu, Sarawak, Malaysia (Fig. 15.3.2). Production started in 1993, some 20 years after first research efforts were initiated by Shell.

PROCESS DESCRIPTION

The basic conversions of SMDS involve partial oxidation of methane into synthesis gas and subsequent Fischer-Tropsch conversion to paraffins. The theoretical thermal efficiency of this route is 78 percent on the basis of NG LHV:

$$CH_4 + \tfrac{1}{2}O_2 \rightarrow 2H_2 + CO$$

803 MJ/kmol	767 MJ/kmol
100%	96%

$$2H_2 + CO \rightarrow -(CH_2)- + H_2O$$

767 MJ/kmol	621 MJ/kmol
100%	81%
96%	78%

The three main process stages are shown schematically in Fig. 15.3.3.

In the SMDS process, these stages are identified as syngas manufacture, heavy paraffin synthesis (HPS, the Fischer Tropsch synthesis), and heavy paraffin conversion (HPC). These stages will be described here. Several support and utility blocks are added.

Syngas Manufacture (SGP, Shell Gasification Process)

Synthesis gas, a mixture of hydrogen and carbon monoxide, is one of the most versatile feedstocks for a wide range of (chemical) processes. In GTL technology, the conversion

Downloaded from Digital Engineering Library @ McGraw-Hill (www.digitalengineeringlibrary.com)
Copyright © 2004 The McGraw-Hill Companies. All rights reserved.
Any use is subject to the Terms of Use as given at the website.

SHELL MIDDLE DISTILLATE SYNTHESIS (SMDS) PROCESS

FIGURE 15.3.2 SMDS Bintulu, Malaysia.

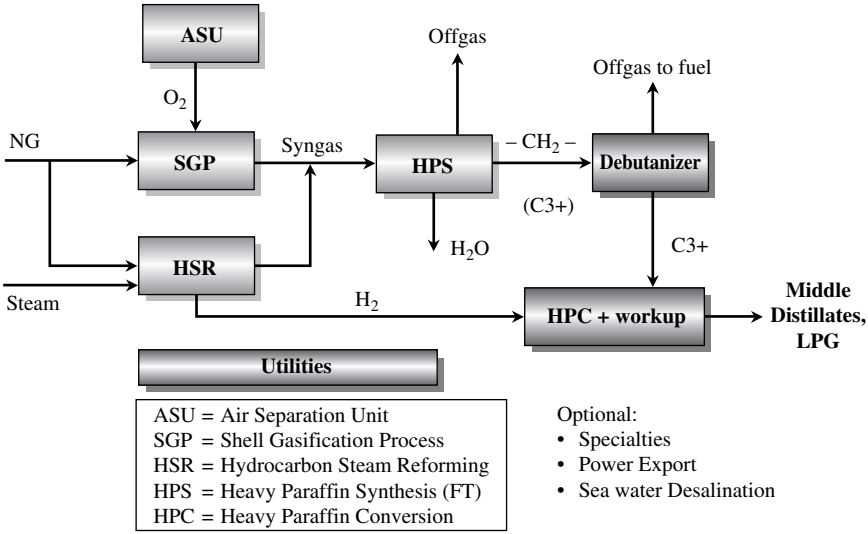

FIGURE 15.3.3 Shell Middle Distillate Synthesis process scheme.

trajectory from methane to liquid hydrocarbons uses syngas as an intermediate. Direct conversion of methane to hydrocarbon chains with economic selectivity and conversion is not (yet) possible.

Syngas manufacture in SMDS is relatively expensive; between 50 and 60 percent of total process capital costs are related to syngas production. Within the syngas manufactur-

Downloaded from Digital Engineering Library @ McGraw-Hill (www.digitalengineeringlibrary.com)
Copyright © 2004 The McGraw-Hill Companies. All rights reserved.
Any use is subject to the Terms of Use as given at the website.

SHELL MIDDLE DISTILLATE SYNTHESIS (SMDS) PROCESS

ing section, it is the air separation units (ASUs) which account for a substantial part of the cost of syngas produced.

In developing the SMDS technology it was established that a combination of commercially proven technologies was most suitable:

- Partial oxidation (POX) of natural gas with pure oxygen, using the proprietary Shell Gasification Process (SGP)
- A hydrogen-manufacturing unit (HMU) based on hydrogen steam reforming (HSR), to adjust the syngas H_2/CO ratio

Pure oxygen is obtained from an air separation unit. SGP is based on direct partial oxidation without the need for a catalyst (Fig. 15.3.4). The feedstock, natural gas, is converted in an empty, refractory lined vessel. The conversion equilibrium is advantageous due to the high temperature. More than 95 percent of NG carbon is converted to CO. Oxidation heat is recovered on a high temperature level as high-pressure steam. The syngas effluent cooler (SEC) is a dedicated design, with several features for the operating conditions. Steam superheating

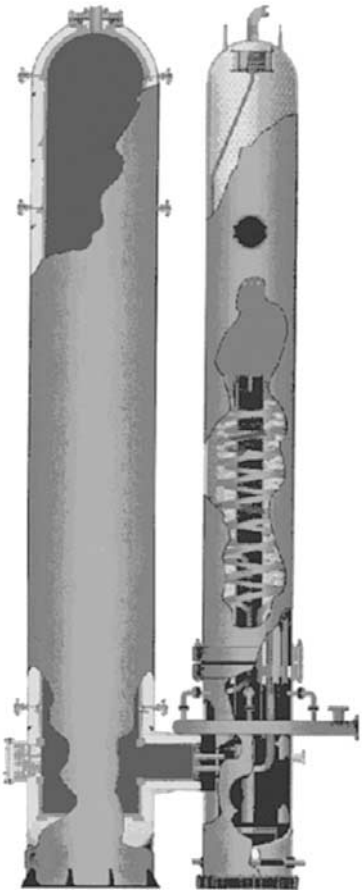

FIGURE 15.3.4 Shell Gasification Process (SGP): gasifier and syngas effluent cooler.

Downloaded from Digital Engineering Library @ McGraw-Hill (www.digitalengineeringlibrary.com)
Copyright © 2004 The McGraw-Hill Companies. All rights reserved.
Any use is subject to the Terms of Use as given at the website.

SHELL MIDDLE DISTILLATE SYNTHESIS (SMDS) PROCESS

can be integrated. Secondary heat recovery is by a boiler feedwater economizer downstream of the SEC. Part of the steam is used for preheat of feed gas and oxygen. The remainder is utilized to drive compressors in the air separation unit(s). Trace components in the cooled raw syngas are removed in a water scrubber and in guard beds prior to transfer to the synthesis section.

Since the 1950s, SGP has been developed into a highly reliable and cost-effective process for syngas production from NG, liquid hydrocarbons, and coal. The process has proved its robustness and reliability in a remote location during the years of operation of SMDS Bintulu. Substantial scale-up from present unit capacities can be done to exploit economies of scale without changes to the process. Scale-up of NG SGP does benefit from developments in oil and coal gasification that have been realized meanwhile.

For Fischer-Tropsch conversion of synthesis gas derived from natural gas, the H_2/CO ratio of the gas leaving the SGP requires some adjustment. SGP produces synthesis gas with an H_2/CO ratio close to 1.7. By nature of the synthesis process, the consumption ratio in the synthesis step is approximately 2.

The hydrogen-manufacturing unit (HMU) provides additional hydrogen

- To adjust the H_2/CO ratio of feed gas supplied to the synthesis section
- As a feed gas for the heavy paraffin cracking unit of the SMDS plant
- For desulfurization of the NG feed

Based on hydrogen steam reforming, the HMU produces raw hydrogen and pure hydrogen (pressure swing unit) depending on the quality required by various consumers.

Alternative syngas manufacturing technologies can be considered, e.g., autothermal reforming (ATR). Studies indicate that ATR could compete with SGP HMU of SMDS at very low steam/carbon ratio and by recycling CO_2. This would require development beyond the industrially proven window for ATR.

SGP HSR is still the preferred option for next-generation SMDS plants.

Heavy Paraffin Synthesis

The heavy paraffin synthesis section is the heart of the SMDS process. This section entails the conversion of the synthesis gas with a low-temperature cobalt-based FT catalyst to produce paraffinic hydrocarbons (and an equivalent amount of water). Low-temperature cobalt-based FT synthesis is most suitable for natural gas–derived syngas.

Since the FT synthesis is highly exothermic, temperature control and heat removal are major parameters in design of the reactor. Moreover, the performance of the synthesis step is a key parameter for the economics of a GTL plant. Newer catalysts provide a very high chain growth probability, to promote formation of long paraffinic chains and to minimize production of undesired light products (Fig. 15.3.5). The ensuing hydroconversion of the long paraffinic chains provides the SMDS product slate flexibility to fit market conditions.

The hydrocarbon synthesis process, and performance of the FT-catalyst in particular, is crucial for commercial viability of a GTL process. Traditional high-temperature FT processes have been used extensively for conversion of syngas from coal. High-temperature FT processes are best suited to production of motor gasoline and other light products.

Obtaining high yields of middle distillates from NG-derived syngas, however, requires a far higher probability of hydrocarbon chain growth than provided by classical Fe and Co catalysts.

The low-temperature Co catalysts developed for SMDS are most suitable for production of long paraffinic hydrocarbon chains from NG-derived syngas with high selectivity. This contributes to high overall thermal and carbon efficiency. Figure 15.3.6 shows the distribution of products, obtained from NG-derived syngas, as a function of chain growth probability. Yield of light fuel components is minimized at high chain growth probability.

Downloaded from Digital Engineering Library @ McGraw-Hill (www.digitalengineeringlibrary.com)
Copyright © 2004 The McGraw-Hill Companies. All rights reserved.
Any use is subject to the Terms of Use as given at the website.

SHELL MIDDLE DISTILLATE SYNTHESIS (SMDS) PROCESS

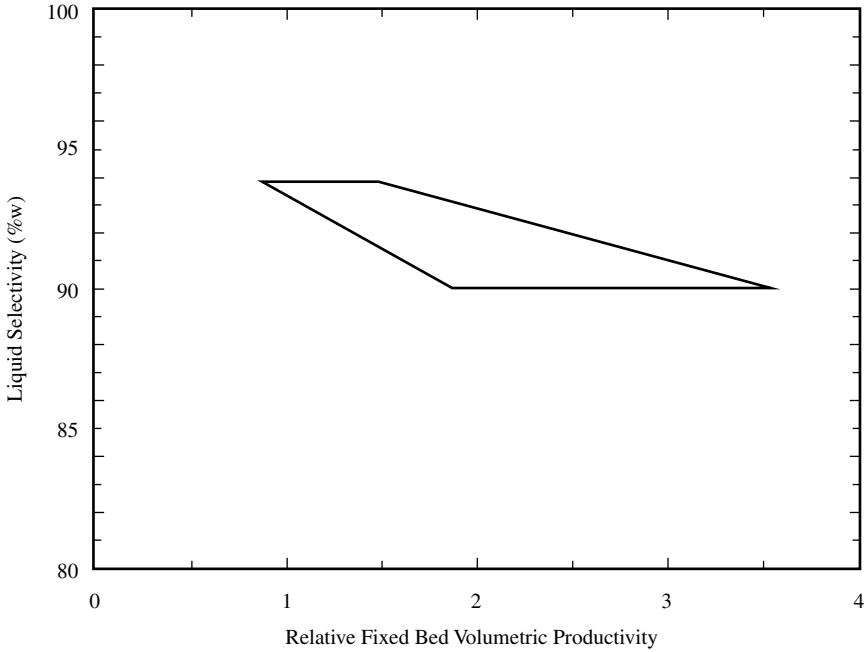

FIGURE 15.3.5 Potential of fixed-bed heavy paraffin catalyst. Fixed-bed FT operating window with R&D pilot plant data.

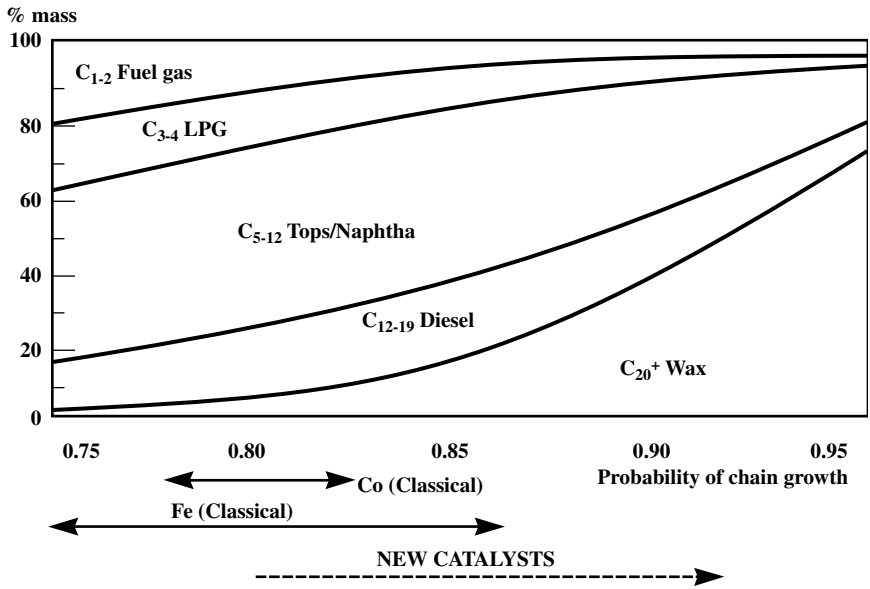

FIGURE 15.3.6 Fischer-Tropsch product distribution.

Downloaded from Digital Engineering Library @ McGraw-Hill (www.digitalengineeringlibrary.com)
Copyright © 2004 The McGraw-Hill Companies. All rights reserved.
Any use is subject to the Terms of Use as given at the website.

SHELL MIDDLE DISTILLATE SYNTHESIS (SMDS) PROCESS

The desired middle-distillate product slates are obtained in the third stage, the selective cracking and isomerization of the heavy paraffins (wax). The combination of selective conversion of synthesis gas into heavy paraffins, followed by selective hydrocracking and isomerization into marketable products, is the key to the high thermal/carbon efficiency as well as to the product flexibility of SMDS.

Heavy Paraffin Synthesis Reactor Technology

Various types of reactor technology can be considered for the synthesis stage, in view of the high chain growth probability of the Shell proprietary class of synthesis catalysts, identified as heavy paraffin synthesis:

- Gas-solid fluidized bed
- Three-phase slurry
- Fixed bed

The Fischer-Tropsch synthesis is a highly exothermic process with an enthalpy change of −146 MJ/kmol CO and operates within a relatively narrow temperature range. Heat removal, thermal stability, and temperature control are key parameters in HPS reactor design.

Gas-Solid Fluidized-Bed Technology

For the highly exothermic and catalyst pore-diffusion-limited synthesis reaction, gas-solid fluidized-bed reactor technology seems attractive. Heat-transfer coefficients are high, and mass-transfer limitations are avoided with the small catalyst particles.

Operational restrictions apply, however. As long as hydrocarbon product resides within the catalyst pores due to capillary condensation, the particles will behave as dry ones. Once hydrocarbon components start to condense on the external surface of the catalyst particles—a condition characterized by the hydrocarbon dew point—particle agglomeration and poor fluidization will occur.

The window for troublefree operation of a fluid-bed FT reactor is governed by the (Andersen-Flory-Schulz) chain growth probability α, by syngas conversion, by operating pressure, by operating temperature, and by paraffin vaporization energy depending on chain length. Fluid-bed FT is possible at high temperatures, low operating pressure, and low conversions and will produce relatively light products.

This is confirmed by the operating conditions of the Sasol Synthol reactors and of the Hydrocol plant by Hydrocarbon Research Inc., which was operated in the 1950s. For production of heavy wax, a stationary, nonregenerative fluid-bed FT reactor is not suitable.

The heavy paraffin synthesis aims at producing long, heavy hydrocarbon chains at high selectivity and conversion levels. Thermodynamics dictate that this benefits from low operating temperature and high operating pressure. Hence, gas-solid catalyst fluidized-bed technology has not been considered for SMDS.

Slurry Technology

Slurry technology relies on small catalyst particles, suspended in liquid product hydrocarbons. The synthesis gas is bubbled through the hydrocarbon/catalyst slurry. The catalyst particles are small to enable suspension in the liquid product fraction.

With the small catalyst particle size (range of 10 to 200 μm) there is no mass transport limitation within the catalyst particles. Long-chain, heavier hydrocarbons will reside in the

Downloaded from Digital Engineering Library @ McGraw-Hill (www.digitalengineeringlibrary.com)
Copyright © 2004 The McGraw-Hill Companies. All rights reserved.
Any use is subject to the Terms of Use as given at the website.

SHELL MIDDLE DISTILLATE SYNTHESIS (SMDS) PROCESS

liquid phase whereas the lighter products will leave the reactor with the vapor phase. Temperature control and heat removal from the reactor, most conveniently by immersed cooling tubes carrying boiling water, are in principle favorable in comparison to fixed-bed technology. Process side pressure drop is low. Large unit capacities can be realized. Several companies have selected and developed slurry reactor technology for FT synthesis in GTL.

Slurry FT synthesis involves several distinct engineering challenges. The design of large slurry reactors involves three-phase hydrodynamics on a large scale. Too high a catalyst holdup in the liquid phase, in particular with very small particles, increases the apparent slurry viscosity. This affects the favorable mixing, heat removal, gas dispersion, and mass-transfer properties of the three-phase system. Dedicated filtration systems must be installed for separation of liquid product from the catalysts/wax mixture and from the overhead vapor/offgas, after cooling and condensation. Slurry catalyst must be mechanically robust to avoid catalyst breakage and fines formation, which might cause losses and product contamination.

Fixed Bed

The SMDS synthesis section (HPS) uses fixed-bed reactor technology (Fig. 15.3.7). The syngas passes through multiple tubes containing the FT catalyst. Reaction heat is removed by boiling water in the reactor shell to produce medium-pressure (MP) steam. This MP steam is the main utility to generate electricity and to drive compressors.

Multitubular reactor technology has matured to a high degree of sophistication with a productivity potential of 10,000 to 15,000 bbl/day per reactor. Today's Shell proprietary fixed-bed FT catalysts provide activity, selectivity, and stability for a unit capacity range of 7000 to 10,000 BPD. HPS syngas conversion can be as high as 96 percent with liquid (C_5^+) selectivity better than 90 percent (Fig. 15.3.5).

The catalyst is loaded into a large number of tubes. Specific heat-transfer surface is high. FT fixed-bed reactors are heavier than fluid-bed/slurry reactors for the same unit capacity. Multitubular reactor (MTR) technology has a number of attractive features compared to two- or three-phase fluidized-bed reactors:

- The design of a commercial MTR is straightforward by multiplication of the performance of an individual tube, which can be assessed accurately in a pilot plant.
- Fixed-bed catalyst provides intrinsic and absolute separation of the products, with zero contamination by catalyst. This is important with several of the products or derivatives having FDA approval.
- By nature of the MTR design, axial catalyst distribution is uniform irrespective of operating conditions.
- In situ catalyst (re-) activation, which is done typically once per year, is easy and effective. Conditions are independent of normal operating conditions and are fully controlled.
- A multitubular reactor arrives at the construction site as a fully integrated unit ready for erection and tie-in. This is an advantage for a remote location. Auxiliaries are the thermosyphon cooling system and a shared gas loop utility for catalyst (re-) activation.

The pressure drop over a fixed-bed reactor, operated at a high performance level, is high in comparison to two- or three-phase fluidized systems. Since the FT synthesis provides ample steam to provide compressor shaft power, this aspect has little effect on capital expenditure or operating costs.

Selection of fixed-bed FT catalyst size and shape is a balancing act. Heat removal and control of temperature gradients in the fixed bed rely on the effective heat conductivity of the packed catalyst particles, which benefits from high gas velocities and larger particles.

Downloaded from Digital Engineering Library @ McGraw-Hill (www.digitalengineeringlibrary.com)
Copyright © 2004 The McGraw-Hill Companies. All rights reserved.
Any use is subject to the Terms of Use as given at the website.

SHELL MIDDLE DISTILLATE SYNTHESIS (SMDS) PROCESS

FIGURE 15.3.7 Fixed-bed multitubular (FT) reactors of SMDS Bintulu, Malaysia.

Larger particles also reduce pressure drop. In high-performance FT catalyst particles a few millimeters in size, intraparticle diffusion limitations will prevail. Catalyst utilization imposes an upper limit to particle size. Hence, catalyst size, shape, and reactor tube diameter are carefully optimized with regard to reaction kinetics, heat transfer, pressure drop, catalyst, and hardware costs.

Bintulu SMDS experience has confirmed the easy operation of fixed-bed MTRs, including start-up, shutdown, and other transient operating modes. Restart of Bintulu FT reactors, after a long standstill, also appeared straightforward: heat up to melt the solidified wax, start up according to standard procedure, and there is no need for inspection or reactivation.

Loading of catalyst is foreseen for every multitubular HPS reactor typically every 5 years. Experience with the efficiency of automated loading, including preparation and check procedures, is impressive and has turned this into a routine activity.

With further development of SMDS technology, and high-performance FT catalysts being available, it was established that fixed-bed technology remains attractive in comparison

Downloaded from Digital Engineering Library @ McGraw-Hill (www.digitalengineeringlibrary.com)
Copyright © 2004 The McGraw-Hill Companies. All rights reserved.
Any use is subject to the Terms of Use as given at the website.

SHELL MIDDLE DISTILLATE SYNTHESIS (SMDS) PROCESS

to alternative reactor technology for a GTL plant on a remote location. The upward potential of MTR technology will be further utilized with new generations of catalyst becoming available.

Heavy Paraffin Cracking

Fischer-Tropsch synthesis alone cannot produce high yields of paraffins of specified carbon number, with adequate cold flow properties. SMDS consists of separate steps: selective production of heavy paraffins (HPS) with subsequent selective cracking and isomerization (HPC) into the desired middle distillates.

In the third stage of the SMDS process, the raw synthesized hydrocarbons consisting mainly of high-molecular-weight paraffins are hydrocracked. A dedicated hydrocracking process using a proprietary catalyst under relatively mild conditions, typically 30- to 50-bar total pressure and at a temperature of about 300 to 350°C, has been developed to achieve this.

The layout of the HPC section is very similar to that of a conventional gas oil hydrotreater. The output is subsequently fractionated.

HPC removes any oxygenated components; long paraffin chains are broken and isomerized to produce middle distillates.

The HPC stage has four functions:

- Preferential hydrocracking of heavy paraffins into fragments in a specified length/boiling range
- Sufficient hydroisomerization of the resulting cracked components to meet cold flow specifications
- Hydrogenation of olefins in the HPS product
- Removal of small amounts of oxygenates, mainly primary alcohols

The example of Fig. 15.3.8 shows that very little methane and ethane are formed, and propane is at a very low level. The small fraction of light hydrocarbons is rerouted as feedstock and fuel for the hydrogen-manufacturing unit. The middle-distillate yield is better than 85 percent.

Products with an intermediate carbon number are formed in significant quantities; the boundaries of the distribution are remarkably sharp. The distribution of Fig. 15.3.8 is

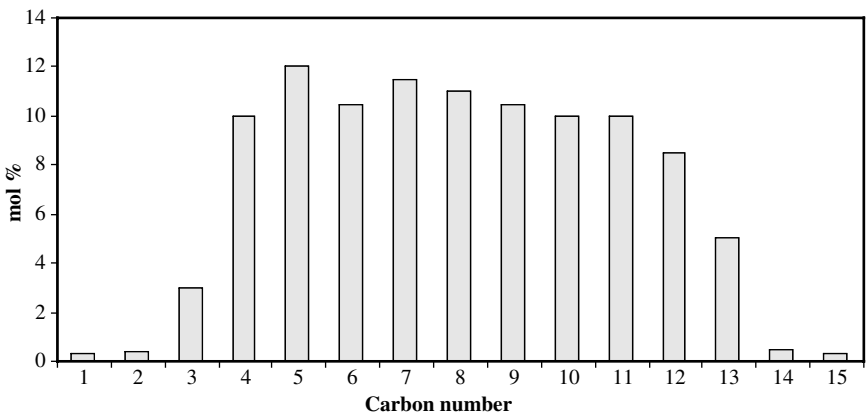

FIGURE 15.3.8 Selectivity of heavy paraffin cracking. Molar product distribution after hydrocracking an FT fraction (88% n-C16, 12% n-C17) over a bifunctional acid/metal catalyst.

Downloaded from Digital Engineering Library @ McGraw-Hill (www.digitalengineeringlibrary.com)
Copyright © 2004 The McGraw-Hill Companies. All rights reserved.
Any use is subject to the Terms of Use as given at the website.

SHELL MIDDLE DISTILLATE SYNTHESIS (SMDS) PROCESS

indicative for primary cracking; scission of internally located C-C bonds of the paraffin chains is favored above terminal (α) or near-terminal (ß, γ) positions. Another factor contributing to preferential cracking of the heavy paraffin chains is the vaporization of the lighter hydrocarbons, reducing residence time and the probability of further cracking.

Varying the hydrocracking severity provides SMDS product slate flexibility, to vary the distribution over gas oil, kerosene, and naphtha, as shown in Figs. 15.3.9 and Fig. 15.3.10; 60 to 75 percent gas oil yield can be achieved.

Selectivity toward the desired product range can be achieved by HPC severity. The HPC effluent is separated by conventional distillation. In the kerosene mode, kerosene yield is some 50 percent of total liquid product whereas a gas oil mode yields some 60 percent gas oil. The theoretical maximum thermal efficiency of the basic SMDS scheme $CH_4 + \frac{1}{2}O_2 \rightarrow 2H_2 + CO \rightarrow -(CH_2)- + H_2O$ is 78 percent based on LHV. The thermal efficiency of SMDS, which can be actually achieved, is typically 63 percent, that is, 80 percent of the

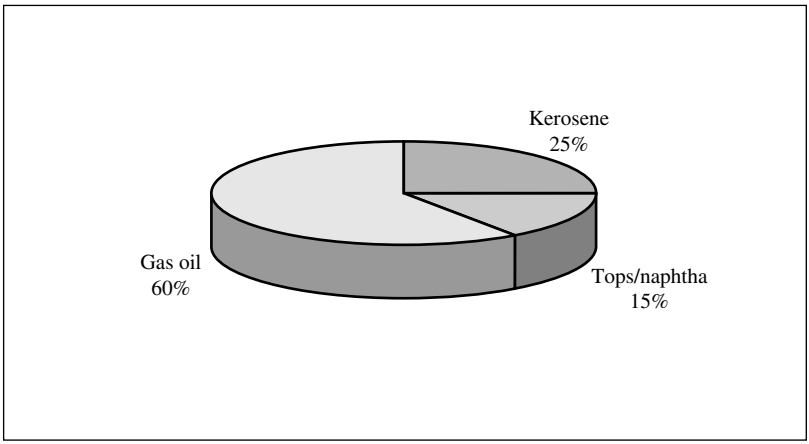

FIGURE 15.3.9 Product distribution in gas oil mode.

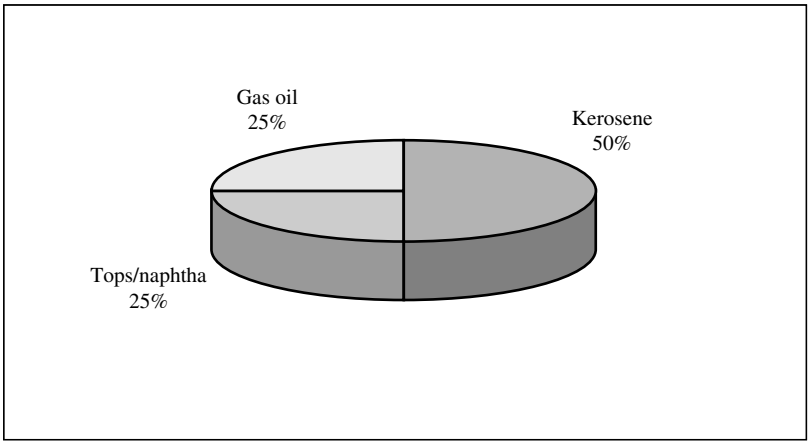

FIGURE 15.3.10 Product distribution in kerosene mode.

Downloaded from Digital Engineering Library @ McGraw-Hill (www.digitalengineeringlibrary.com)
Copyright © 2004 The McGraw-Hill Companies. All rights reserved.
Any use is subject to the Terms of Use as given at the website.

thermodynamic maximum. The carbon efficiency is 78 to 82 percent. Considering the number of process steps and trims, this is a remarkable achievement. It should be realized that the efficiency number is affected by the quality of the feed gas, by the environmental conditions, as well as by investment optimization considerations.

Thermal efficiency will be raised further with new generations of HPS and HPC catalyst becoming available, which offer better activity and selectivity of synthesis, and by more favorable operating conditions.

QUALITY OF THE PRODUCTS

By their nature, products synthesized from carbon monoxide and hydrogen are extremely clean. They contain no sulfur, no nitrogen, and no aromatics. The SMDS products have impurities that are several orders of magnitude lower than highly refined crude oil–derived products. The highly paraffinic nature of SMDS products makes them stand apart from crude oil–derived distillates in terms of density, combustion characteristics, and chemical composition.

Although the first SMDS plant at Bintulu, Malaysia, produces several hydrocarbon products, an interesting and profitable group of products is the FDA-approved, food-grade waxes. The waxes are ultimately used in chewing gum, cosmetics, medicines, cup coatings, and a host of other products. Prices obtained for these products are high and contribute substantially to plant economics.

Here, we focus on the middle-distillate fuel qualities (Table 15.3.1).

Naphtha

The naphtha fraction is completely paraffinic and therefore makes an excellent ethylene cracker feedstock, giving a higher yield of ethylene and propylene in comparison to petroleum-derived naphtha feedstock.

Kerosene

SMDS kerosene is a clean-burning fuel for domestic heating. It can also be used to upgrade kerosene fractions that have a low smoke point and high aromatics. It may offer possibilities as a jet fuel component. However, it has not yet been approved.

TABLE 15.3.1 Typical Middle Distillate Properties

Property	Unit	Naphtha	Kerosene	Method
Density @ 15°C	kg/m^3	690	738	ASTM D1298
Saybolt color		+29	+30	ASTM D156
Distillation range				ASTM D86
IBP	°C	43	155	
FBP	°C	166	191	
Sulfur	ppm	<3	<10	ASTM D1266
Cetane index		n/a	58	ASTM D976
Smoke point	mm	n/a	>50	ASTM D1322
Flash point	°C	n/a	42	ASTM D93
Aromatics	%v	0	<0.1	ASTM D5186

Downloaded from Digital Engineering Library @ McGraw-Hill (www.digitalengineeringlibrary.com)
Copyright © 2004 The McGraw-Hill Companies. All rights reserved.
Any use is subject to the Terms of Use as given at the website.

SHELL MIDDLE DISTILLATE SYNTHESIS (SMDS) PROCESS

Moreover there are attractive solvent/chemical applications for SMDS kerosene. It can be tailored to a solvent of high purity, which together with its low odor and water-clear appearance makes it particularly attractive in applications such as dry cleaning and other "speciality solvent" applications.

SMDS kerosene is also suitable as a trimming agent for heavy gas oils that need to be upgraded to specification diesel, for example, winter diesel for automotive use in cold climates.

SMDS Diesel/Gas Oil

The GTL product with the brightest future seems diesel for use as transportation fuel. SMDS produces an exceptional quality of synthetic fuel that can be used directly (after including a lubricity additive) in diesel engines or as a blendstock to upgrade refinery diesel.

Independent studies with SMDS gas oil have shown the significant reduction in emissions (NO_x, SO_x, HC, CO, and particulates). SMDS diesel has a cetane index (CI) of 76, no detectable sulfur even on the ppm level. It is virtually paraffinic (with a high proportion of straight-chain paraffins) and contains almost no aromatic, cycloparaffinic, or polar species. The SMDS diesel responds well to commercial lubricity additives, allowing it to meet the given lubricity specification. Compatibility of the fuel with elastomeric seals in fuel injection equipment (FIE) may need some consideration.

Table 15.3.2 details the properties of SMDS and comparable automotive gas oil (AGO) samples, i.e., an EU reference CEN (Comité Européen de Normalisation) fuel (typical 1998 quality) and a Swedish Class I (a very low sulfur content fuel). The forthcoming EU specifications for diesel fuel, which require a maximum sulfur content of 50 ppm mass, could ideally use SMDS gas oil as a blending component. Alternatively the products could do well on a market where premium specifications are desired to meet local requirements, for example, the California Air Resources Board (CARB) specifications, a maximum of

TABLE 15.3.2 Typical SMDS and AGO Sample Analyses

Property	CEN (1998 quality)	Swedish Class I	SMDS
Density* @ 15°C kg/m^3	837	814	776
Distillation, °C†			
IBP	201	197	184
10%	219	213	—
50%	269	231	275
90%	326	269	340
FBP	368	293	357
Cetane number	50	58	81
Cetane index‡	52.2	50.4	76
Viscosity @ 40°C Cst§	2.823	1.903	2.702
Sulfur, %m	0.05	0.001	<0.0002
Aromatics, %m¶			
Mono	25	9.7	<0.05
Di	2.1	0.1	<0.05
Tri	1.2	<0.05	<0.05
Total	28	10	<0.05

*IP160/ASTM D1298.
†IP123/ASTM D86.
‡IP380/94.
§IP71/ASTM D445.
¶HPLC, IP391.

Downloaded from Digital Engineering Library @ McGraw-Hill (www.digitalengineeringlibrary.com)
Copyright © 2004 The McGraw-Hill Companies. All rights reserved.
Any use is subject to the Terms of Use as given at the website.

500 ppm sulfur and maximum 10 vol % aromatics. SMDS gas oil with zero aromatics, zero sulphur, and cetane index of 76 can be used in blends to meet these severe CARB regulations. Since 1995, SMDS diesel has been sold to refiners and blenders who used it to upgrade its mineral diesel to CARB specification to Californian market.

Another attractive characteristic of SMDS gas oil is that the material is fully biodegradable. For certain applications this is of prime importance (e.g., where spills into environment could occur); this feature is expected to gain momentum in the near future.

COMPLEX INTEGRATION

GTL involves large energy streams. Partial oxidation of NG (SGP) and Fischer-Tropsch synthesis are highly exothermic processes. Plant utilities are integrated such that all requirements, including these of the air separation units, are generated from the complex energy streams.

Produced steam is utilized for direct or indirect drive (via electricity generation) of compressors, including those needed for air separation. Light hydrocarbons are recycled for utility generation or as fuel for hydrogen manufacturing.

If commercially attractive outlets are available, export of nitrogen, steam, and/or electricity is an option as shifting the internal balance of the SMDS complex could produce these.

WASTES AND EMISSIONS

The SMDS system offers major gains in air quality compared to the refinery system, thanks to its significantly lower emissions of hydrocarbons, nitrogen oxides, sulfur oxides, and waste. Nor do these gains in air quality result in a greenhouse gas penalty, since its carbon emissions are in the same range as those of a conventional refinery system.

Process water and condensate can be reused in the plant. Most of the oxygen feed to the plant ends as water. Note that the Fischer-Tropsch synthesis alone produces some 1.3 tons of water per ton of hydrocarbons. Wastewater is biotreated to the extent that it can be discharged as surface water. In areas of water scarcity, production of clean water is an option.

Light hydrocarbon gaseous by-products, which are produced in small quantities by different process units, are recycled or used for utility generation. Flue gases emitted to air are almost free from sulfur, meeting most stringent specifications worldwide.

Catalysts used in several process units (synthesis, cracking, hydrogen manufacture) have a lifetime of several years. Spent catalyst, the only solid waste of the process, is returned to the manufacturer for metals recovery.

FUTURE PROSPECTS

The economic viability of gas-to-liquids projects today and in the near future depends on several key economic factors: the availability of low-cost gas, crude prices, capital and operating costs, site-specific factors, and the fiscal regime of the host country. Low-cost gas as well as fiscal friendly regimes are of the utmost importance to make a gas-to-liquids project viable.

If natural gas is priced at 0.50 U.S. $/millionBtu, then the feedstock cost element in the product is about U.S.$5/bbl. The total selling price further includes a capital charge which depends on numerous factors, including fiscal regimes, local incentives, debt/equity ratio, type of loans, and corporate return requirements.

Downloaded from Digital Engineering Library @ McGraw-Hill (www.digitalengineeringlibrary.com)
Copyright © 2004 The McGraw-Hill Companies. All rights reserved.
Any use is subject to the Terms of Use as given at the website.

SHELL MIDDLE DISTILLATE SYNTHESIS (SMDS) PROCESS

Another important factor is whether the products are for domestic use or export. For countries with sufficient gas but needing to import oil or oil products to meet local demand, SMDS products manufactured in that country should realize at least import parity values. For such countries, therefore, the national benefit of the SMDS process can be substantial. In addition to these factors, the capacity of the plant is of great importance. Especially for remote locations, where self-sufficiency of the plant is essential, larger plants in the range of 75,000 bbl/day benefit from the economy of scale.

SMDS (Malaysia) Sdn Bhd has demonstrated the commercial viability of the SMDS process. Further developments have reduced the specific capital cost, such as

- Equipment scale-up, notably in the synthesis gas manufacturing plant, which accounts for more than 50 percent of the total process capital cost.
- Further catalyst improvements. A second-generation catalyst, which yields significantly more liquids than the catalyst originally implemented in Bintulu, has been developed and is ready for application in the next plant.
- General process integration within the project.

Operational experience, coupled with technological improvements, has resulted in specific capital costs of around U.S. $20,000/bbl, as shown in Fig. 15.3.11.

The successful application of GTL technology at SMDS Bintulu represents an important advance in the commercialization of that technology and is an asset in Shell's portfolio of technologies for making natural gas transportable. It provides exciting opportunities in terms of marketing hydrocarbon products of a quality ideally suited for a business environment requiring increasingly high-performance standards.

REFERENCES

1. S. T. Sie, M. M. G. Senden, and H. M. W. van Wechem, "Conversion of Natural Gas to Transportation Fuels via the Shell Middle Distillate Process (SMDS)," *Catalysis Today,* **8:** 371–394, 1991.

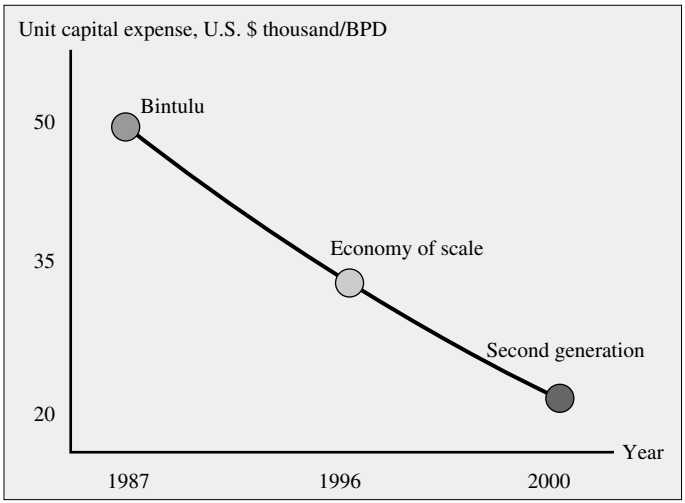

FIGURE 15.3.11 Reduction of specific costs of SMDS.

Downloaded from Digital Engineering Library @ McGraw-Hill (www.digitalengineeringlibrary.com)
Copyright © 2004 The McGraw-Hill Companies. All rights reserved.
Any use is subject to the Terms of Use as given at the website.

SHELL MIDDLE DISTILLATE SYNTHESIS (SMDS) PROCESS

2. M. M. G. Senden, S. T. Sie, M. F. M. Post, and J. Ansorge, "Engineering Aspects of the Conversion of Natural Gas into Middle Distillates," Paper presented at NATO Advanced Study Institute Conference at University of West Ontario, Canada, Aug. 25–Sept. 4, 1991.
3. R. H. Clark and J. F. Unsworth, "The Performance of Diesel Fuel Manufactured by the Shell Middle Distillate Synthesis Process," *Proceedings of Second Int. Colloquium "Fuels,"* Tech. Akad. Esslingen, Ostfildern, Germany, Jan. 20–21, 1999.

Downloaded from Digital Engineering Library @ McGraw-Hill (www.digitalengineeringlibrary.com)
Copyright © 2004 The McGraw-Hill Companies. All rights reserved.
Any use is subject to the Terms of Use as given at the website.

REVISED & EXPANDED THIRD EDITION

MASTER THE LATEST TECHNOLOGIES SERVING THE PETROLEUM INDUSTRY!

If staying on top of the latest developments in the petroleum refining process industry is part of your work, here's the one-stop resource you need. **HANDBOOK OF PETROLEUM REFINING PROCESSES** delivers comprehensive coverage of how major players like UOP, KBR, STRATCO, Belco, Stone & Webster, Foster Wheeler, Chevron Lummus Global, ConocoPhillips, ChevronTexaco, and Shell, are taking those processes to new heights through technology.

Thoroughly revised and expanded, this new edition of the **HANDBOOK OF PETROLEUM REFINING PROCESSES** features new chapters that focus on the technological, pollution-control, and economic aspects of 61 petroleum refining processes as created by a host of industry powerhouses.

Estimates of capital and operating costs are provided, along with information on the design of additions to existing refineries and the construction of new ones.

TECHNOLOGIES COVERED INCLUDE:

- Alkylation and Polymerization
- Base Aromatics Production Processes
- Catalytic Cracking
- Catalytic Reforming
- Dehydrogenation
- Hydrogen Production
- Hydrocracking
- Hydrotreating
- Isomerization
- Separation Processes
- Sulfur Compound Extraction and Sweetening
- Visbreaking and Coking
- Oxygenates Production Technologies
- Hydrogen Processing
- Gas to Liquids Technologies

The McGraw·Hill Companies

ISBN 978-0-07-139109-2
MHID 0-07-139109-6
90000
9 780071 391092

Visit McGraw-Hill at: **www.books.mcgraw-hill.com**

Cover: Pehrsson Design

Chemical Engineering