جامعة الموصل / كلية الهندسة

# قسم الهندسة الكهربائية

## Subject Title: Computer interfacing systems

---

## Subject Code: CINT461

Instructor : Fawaz Yaseen Abdullah

# Course Description (15 weeks) or Outlines

- An Introduction to INTEL Microprocessor Family
- Programmable Peripheral Interface 8255
- Analog To Digital Converters A/D
- Digital To Analog Converters D/A
- Programmable Interval Timer 8253
- Introduction to UART and USART
- Serial Port RS 232 and parallel port
- Microcontroller architecture
- Microcontroller programming.
- Application of Microcontroller

# Figures, Diagrams, or Examples…. etc

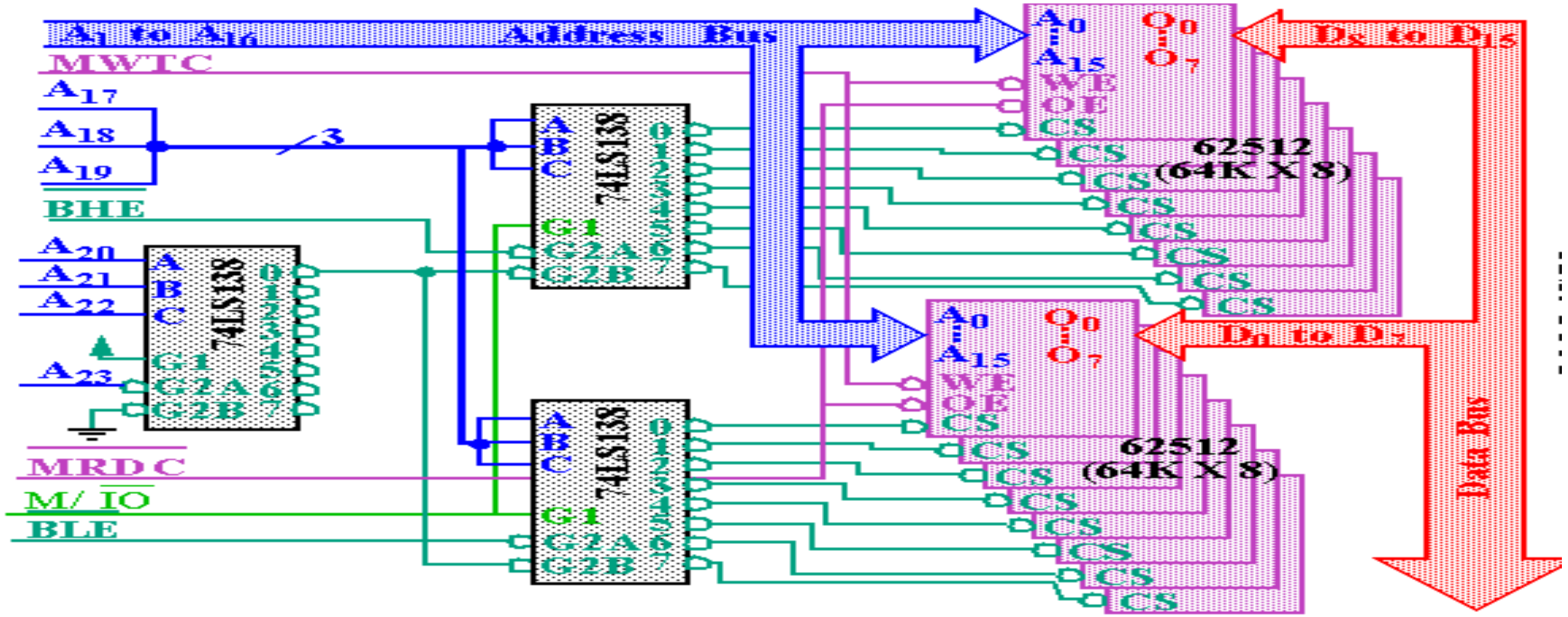

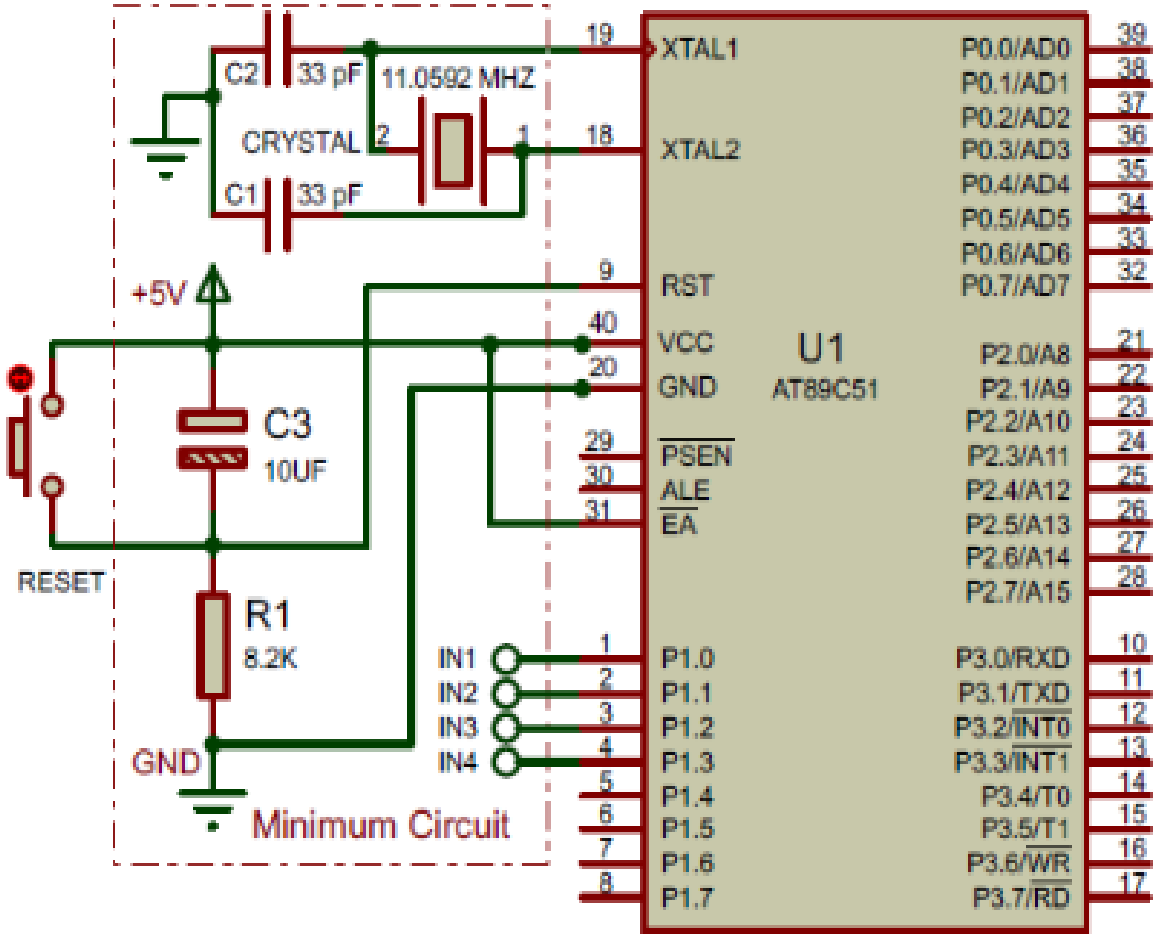


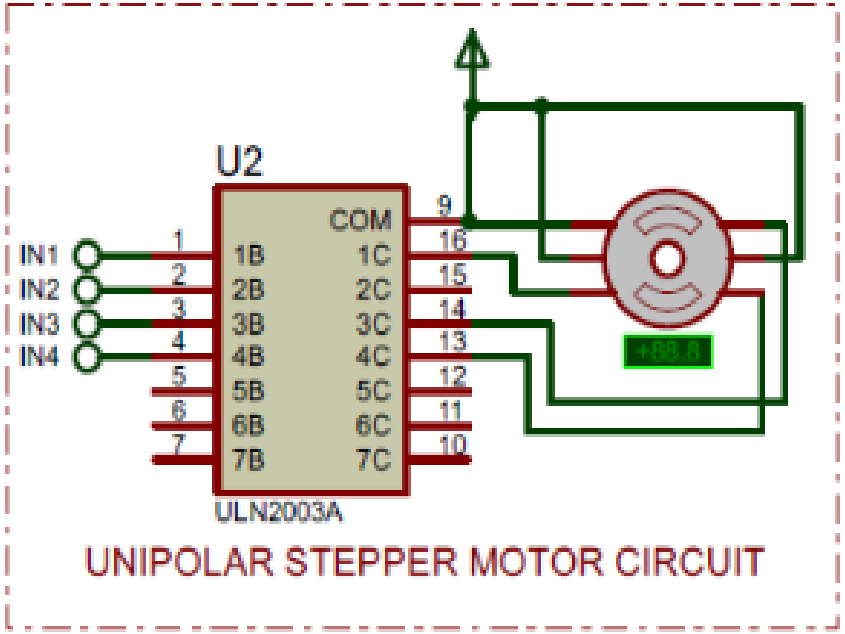


# Stepper Motor with 8051

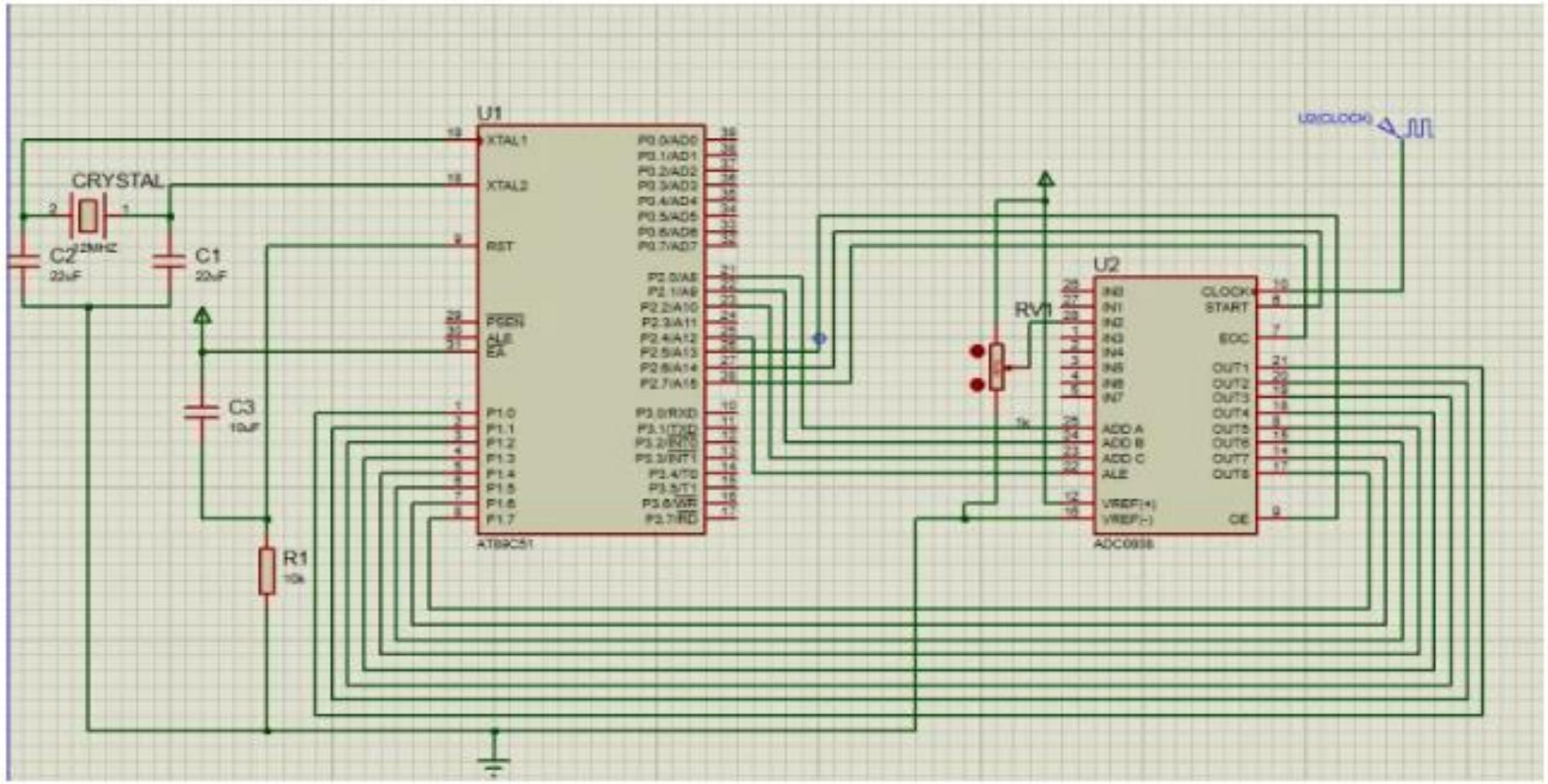


**Interfacing 8051 with 0808**

# Temperature Controlled Fan Using 8051

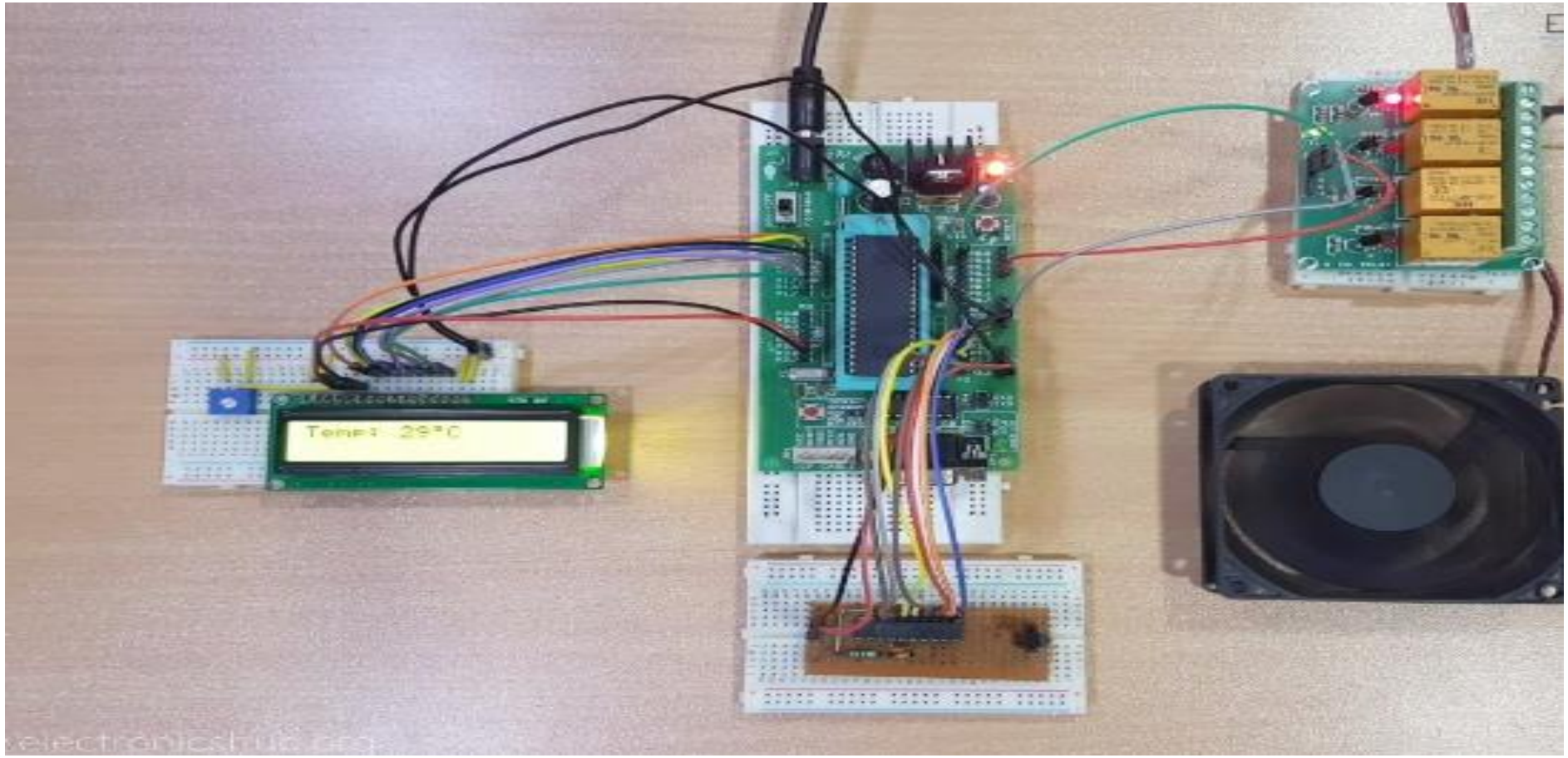

# Textbook or References

1- **The 8088 and 8086 Microprocessors: Programming, Interfacing, Software, Hardware, and Applications (4th Edition) by Walter A. Triebel , Avtar Singh** ; Wiley (2016), ISBN-13: 978-0130930811.

**2- The Intel Microprocessors (8th Edition)** by Barry B. Brey. Hart McGraw Hill (2011), ISBN-13: 978-0135026458

**3- Microprocessors & Microcontrollers (first Edition 2009) by A.P.Godse, D.A.Godse ,**Technical Publications, 2009.

# Useful Links

| Description | Links |
| --- | --- |
| Video Lecture | https://www.youtube.com/watch?v=3RkasPo9sRw/ |
| | |